FED. SUP CLASS. 1650

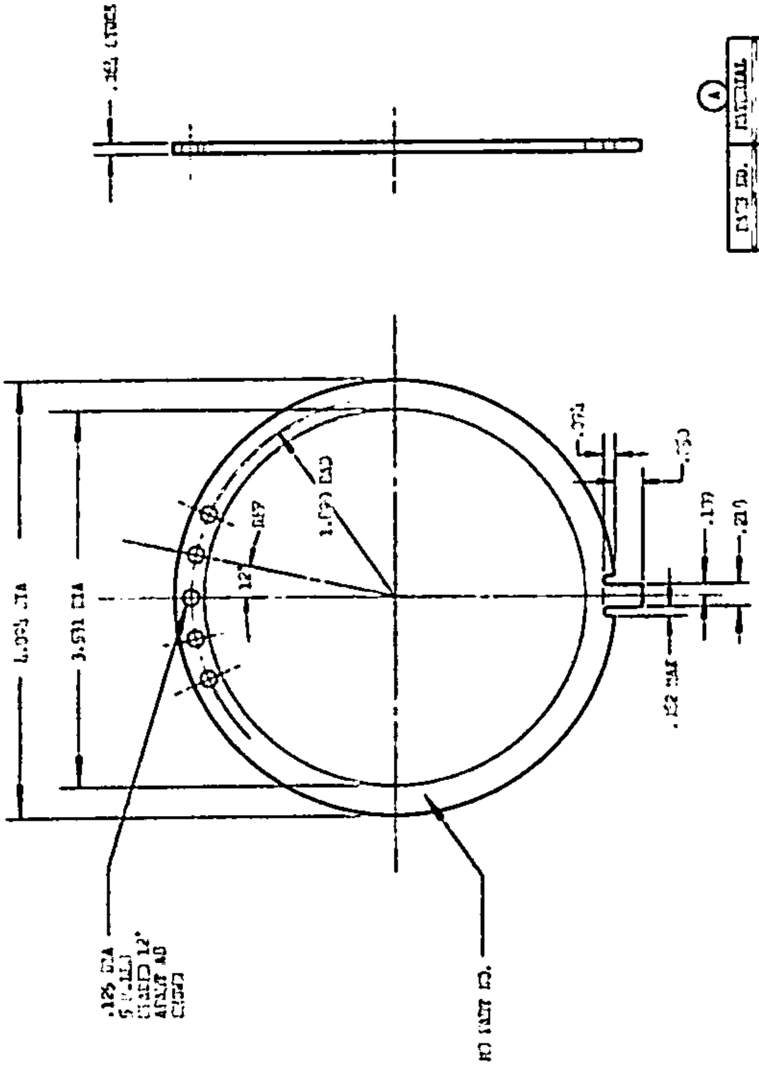

Ⓐ

DASH NO.	MATERIAL
-1	ALUMINUM
-2	CRES

Ⓐ MATERIAL: ALUMINUM, SPECIFICATION QQ-A-561 (-1), TYPE I, CONDITION A, (-1). CORROSION RESISTANT STEEL, SPEC MIL-S-[illegible] (-2) [illegible] ANNEALED.

REMOVE ALL BURRS AND SHARP EDGES .015 MAX.

DIMENSIONS IN INCHES. UNLESS OTHERWISE SPECIFIED, TOLERANCES: DECIMALS ±.010, ANGLES ±2°.

THIS STANDARD TAKES PRECEDENCE OVER DOCUMENTS REFERENCED HEREIN.

REFERENCED DOCUMENTS SHALL BE OF THE ISSUE IN EFFECT ON DATE OF INVITATIONS FOR BID.

Ⓐ [illegible].

APPROVED 18 May 56 REVISED Ⓐ 11 Apr 60

THIS DOCUMENT HAS BEEN PROMULGATED BY THE DEPARTMENT OF DEFENSE AS THE MILITARY STANDARD TO LIMIT THE SELECTION OF THE ITEM, PRODUCT, OR DESIGN COVERED HEREIN IN ENGINEERING, DESIGN, AND PROCUREMENT. THIS STANDARD SHALL BECOME EFFECTIVE NOT LATER THAN 90 DAYS AFTER THE LATEST DATE OF APPROVAL SHOWN.

CUSTODIANS	OTHER INT.	MILITARY STANDARD	MS24360 (ASG)
Navy-BuWeps Air Force	A - N - AF -	RING, LOCK, FLIGHT PRESSURE REFUELING NOZZLE	
PROCUREMENT SPECIFICATION MIL-N-25161		SUPERSEDES: USAF DRAWING 5539353	SHEET 1 OF 1

DD FORM 672-1
1 OCT 52

NOTICE: When Government drawings, specifications, or other data are used for any purpose other than in connection with a definitely related Government procurement operation, the United States Government thereby incurs no responsibility, nor any obligation whatsoever; and the fact that the Government may have formulated, furnished, or in any way supplied the said drawings, specifications, or other data is not to be regarded by implication or otherwise as in any manner licensing the holder or any other person or corporation, or conveying any rights or permission to manufacture, use, or sell any patented invention that may in any way be related thereto.

Source: https://assist.dla.mil -- Downloaded: 2026-10-23T14:53Z
Check the source to verify that this is the current version before use.