FED. SUP CLASS.
6610

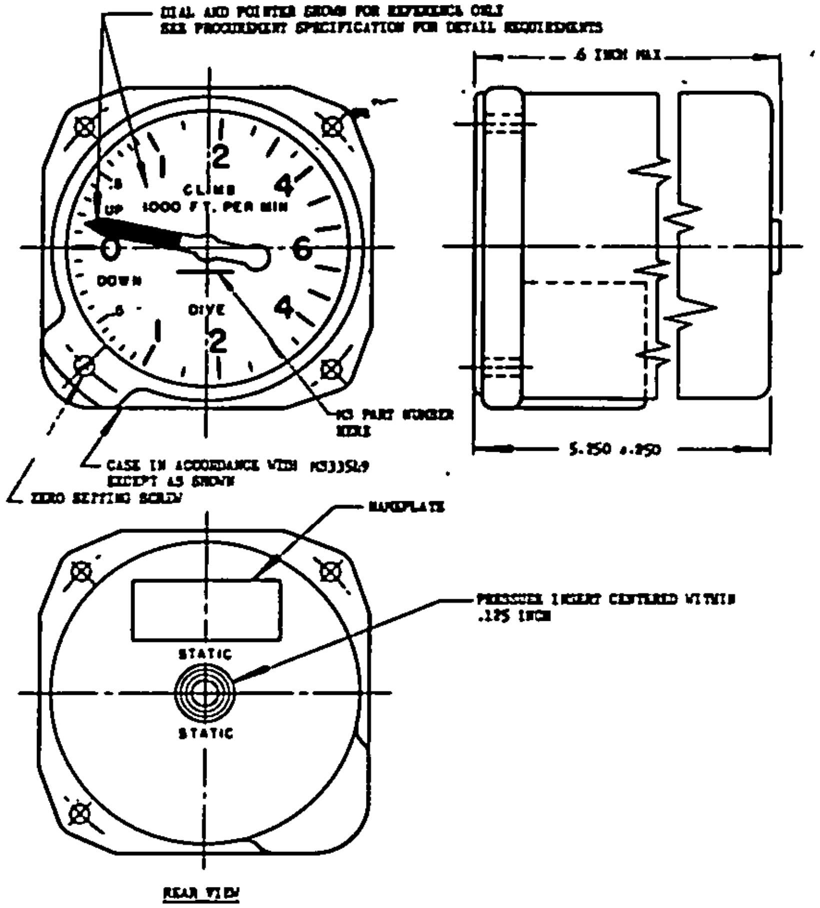
DIAL AND POINTER SHOWN FOR REFERENCE ONLY
SEE PROCUREMENT SPECIFICATION FOR DETAIL REQUIREMENTS
.6 INCH MAX
2
4
6
4
2
1
1
.5
.5
0
CLIMB
1000 FT. PER MIN
UP
DOWN
DIVE
MS PART NUMBER HERE
5.250 ±.250
CASE IN ACCORDANCE WITH MS33549
EXCEPT AS SHOWN
ZERO SETTING SCREW
NAMEPLATE
PRESSURE INSERT CENTERED WITHIN .125 INCH
STATIC
STATIC
REAR VIEW

| MS PART NO. | | DIAL MARKINGS | BOSS | GASKET |
|---|---|---|---|---|
| MS28049-1 | | FLUORESCENT | AN10050-4 | MS 28778-4 |
| MS28049-2 | | LUSTERLESS WHITE | -4 | -4 |

DIMENSIONS IN INCHES

Ⓑ CERTAIN PROVISIONS OF THIS STANDARD (DIAL MARKING AND MAX LENGTH DIMENSION) ARE THE SUBJECT OF INTERNATIONAL STANDARDIZATION AGREEMENTS ASCC AIR-STD 10/8 AND NAT-STD-3320. WHEN AMENDMENT, REVISION, OR CANCELLATION OF THIS STANDARD IS PROPOSED WHICH WILL MODIFY THE INTERNATIONAL AGREEMENT CONCERNED, THE PREPARING ACTIVITY WILL TAKE APPROPRIATE ACTION THROUGH INTERNATIONAL STANDARDIZATION CHANNELS INCLUDING DEPARTMENTAL STANDARDIZATION OFFICES TO CHANGE THE AGREEMENT OR MAKE OTHER APPROPRIATE ACCOMMODATIONS.

FOR DESIGN FEATURE PURPOSES, THIS STANDARD TAKES PRECEDENCE OVER PROCUREMENT DOCUMENTS REFERENCED HEREIN. REFERENCED DOCUMENTS SHALL BE OF THE ISSUE IN EFFECT ON DATE OF INVITATIONS FOR BID.

APPROVED 7 Jan 55 REVISED Ⓐ 10 Feb 64 Ⓑ 26 SEP 88

| | | | |
|---|---|---|---|
| P.A. Ⓑ<br>AF-11<br>Other Cust<br>USAF.--99 | INTERNATIONAL INTEREST Ⓑ<br>AIR-STD 10/8<br>NAT-STD-3320 | MILITARY STANDARD<br>INDICATOR, VERTICAL SPEED, 3 INCH | MS28049<br>(USAF) |
| PROCUREMENT SPECIFICATION<br>MIL-I-7721 | | SUPERSEDES: AN5825. | SHEET 1 OF 1 |

DD FORM 672-1 (Limited coordination)
1 OCT 62

6610-F267

DISTRIBUTION STATEMENT A. Approved for public release; distribution is unlimited.
AMSC N/A
The military standard is approved for use within the Department of the Air Force, and is available for use by all Departments and Agencies of the Department of Defense.
Reviewers and Users:

NOTES TO PRINTER: REDUCE BORDER TO 6-27/32x9-3/4. PRINT LEFT BORDER-LINE ONE INCH FROM LEFT EDGE OF 8x10-1/2 SHEET. PRINT BOTTOM BORDER LINE 3/4 INCH FROM BOTTOM EDGE OF 8x10-1/2 SHEET. SIGNATURE FORM NOT TO BE INCLUDED ON 8x10-1/2 SHEET.

| | | DATE |
|---|---|---|
| DRAWN BY | | |
| TYPED BY | | |
| CHECKED BY | | |

Source: https://assist.dla.mil -- Downloaded: 2026-10-23T16:56Z
Check the source to verify that this is the current version before use.