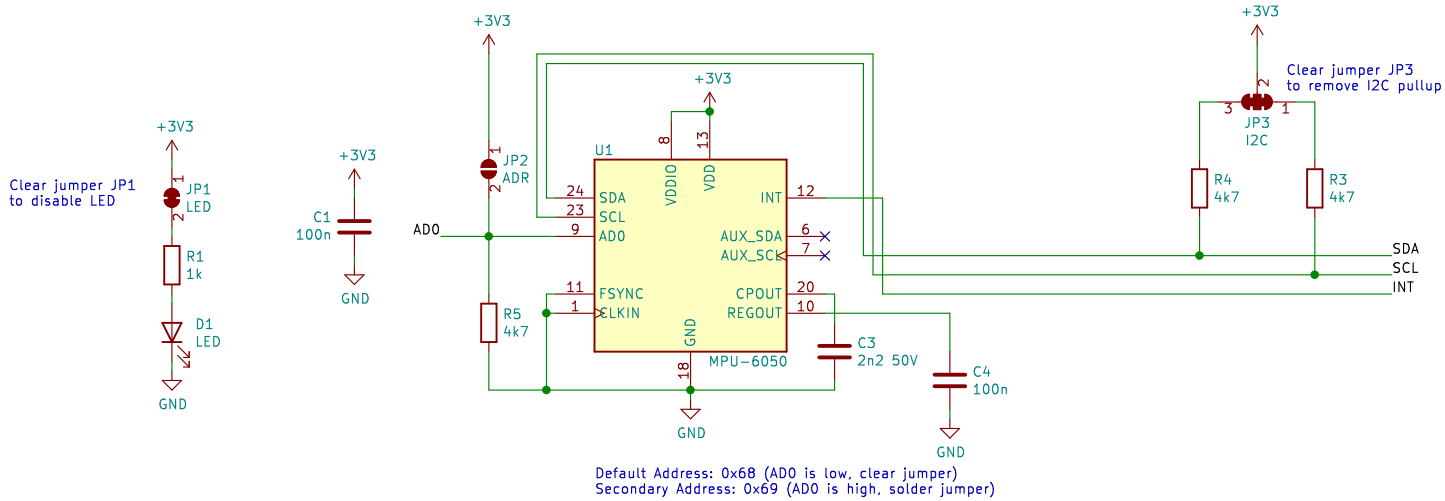

Default Address: 0x68 (AD0 is low, clear jumper)
Secondary Address: 0x69 (AD0 is high, solder jumper)

PiicoDev connectors

J1

1	GND
2	+3V3
3	SDA
4	SCL

J2

1	GND
2	+3V3
3	SDA
4	SCL

breakout header

J3

GND	1	GND
3V3	2	+3V3
SDA	3	SDA
SCL	4	SCL

J5

Address	1	INT

J4

Address	1	AD0

ERC Metadata

PWR_FLAG GND
PWR_FLAG +3V3

piicodev®

made with ♥ in the Hunter

License: CCASAv4.0 http://creativecommons.org/licenses/by-sa/4.0
PiicoDev and the PiicoDev logo are trademarks of Core Electronics Pty Ltd.
Designed at Core Electronics by Peter Johnston

Sheet: /
File: PiicoDev-IMU-MPU6050.sch

Title: PiicoDev Motion Sensor MPU-6050

Size: A4	Date: 2021-05-07	Rev: 10
KiCad E.D.A. kicad (5.1.8-44-gfd79c7ae46)-1		Id: 1/1