DEVICE USB

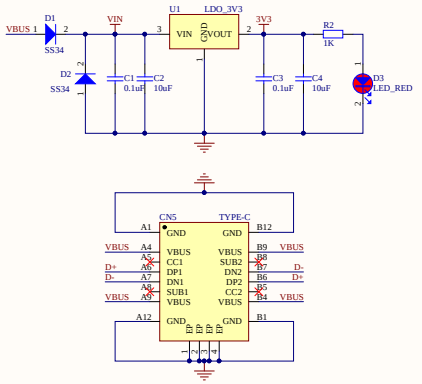

SWD

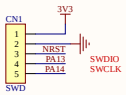

BOOT0

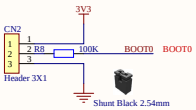

RESET KEY

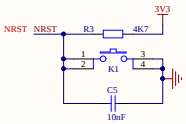

USER KEY

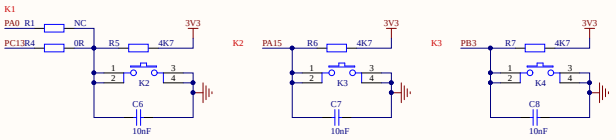

DC-DC

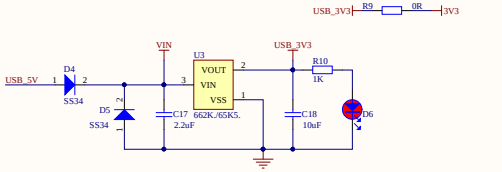

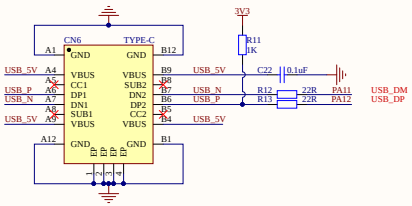

MCU

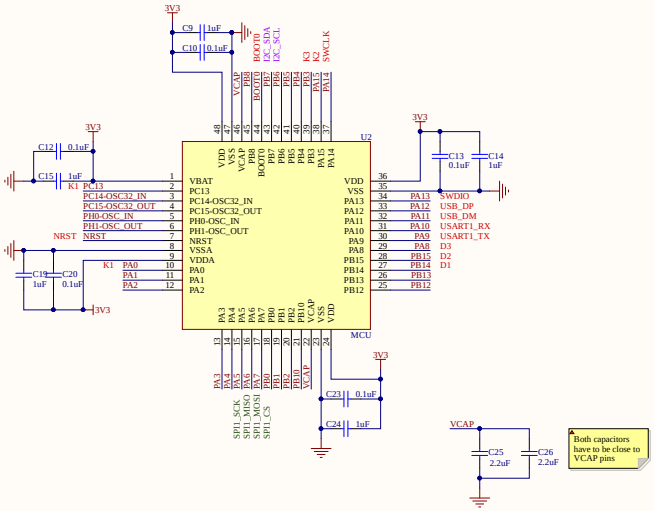

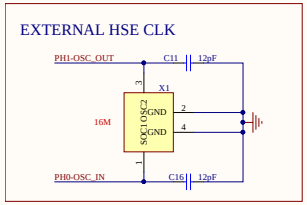

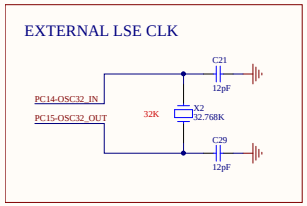

UART

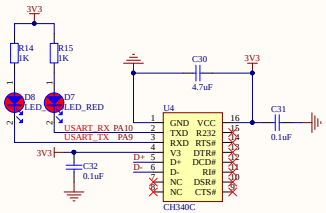

USER LED

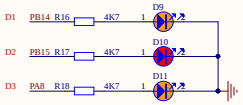

CONNECT

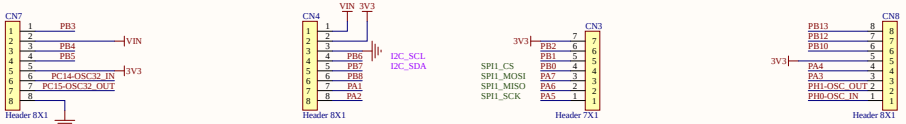

Title	STM32H503CB_Senser		
Size: A2	Number:*	Revision:*	
Date: 2024/5/14	Time: 18:17:17	Sheet * of *	
File: C:\Users\687\Desktop\PCB\STM32H系列\0511_STM32H503CB_Senser\PCB\STM32H503CB_Senser.SchDoc			