DEVICE USB

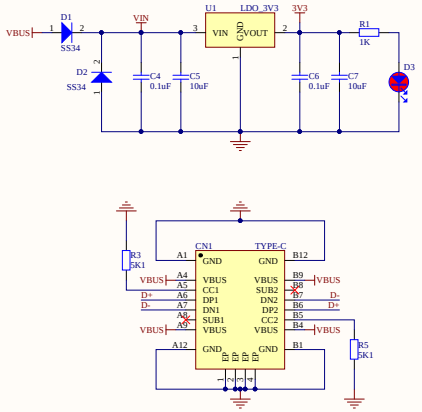

USER KEY

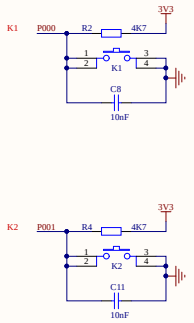

MCU

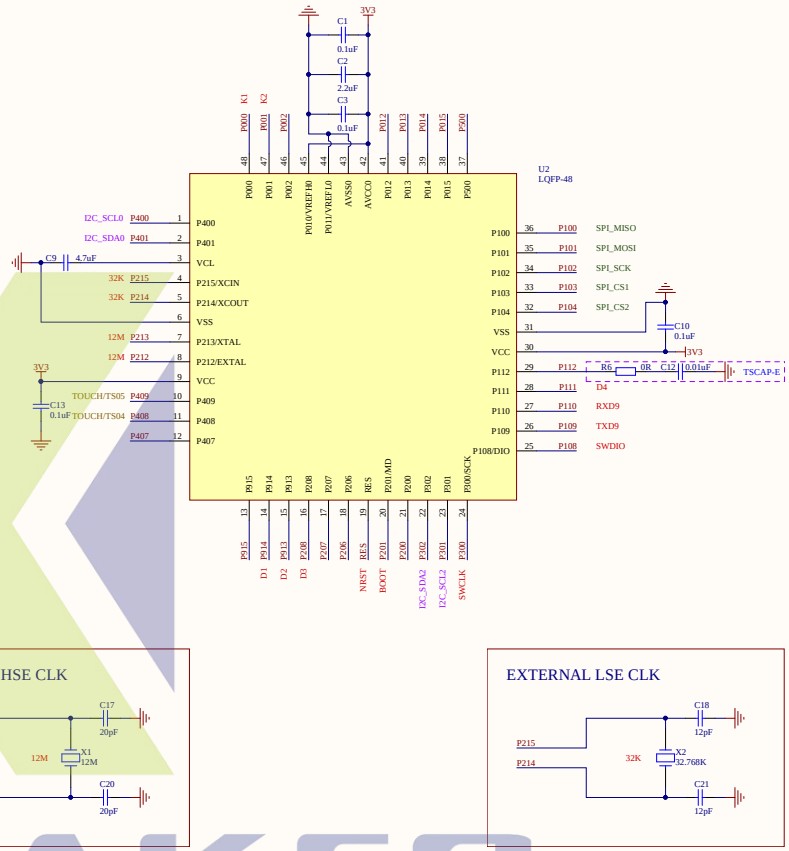

UART

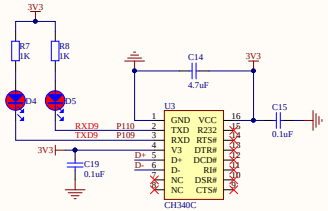

TOUCH

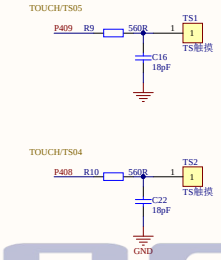

SWD

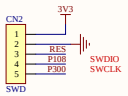

BOOT

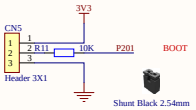

CONNECT

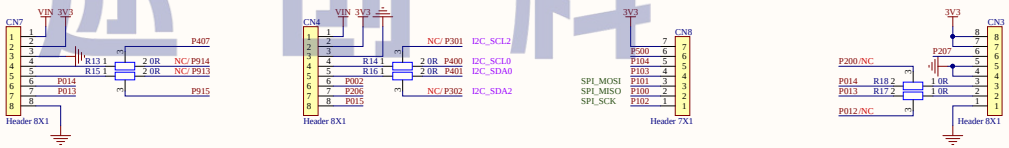

RESET KEY

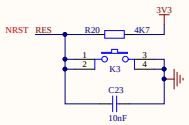

USER LED

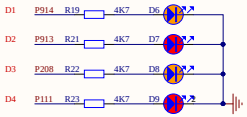

COREMAKER
芯途创科

Title RA2E1_SENSER-V1.0_SCH		COREMAKER 芯途创科
TEL: 15622736378	Revision:*	
Date: 2024/12/25 Time: 15:12:11	Sheet * of *	
File: C:\Users\687\Desktop\RA2E1_SENSOR-V1.0.SchDoc		