DEVICE USB

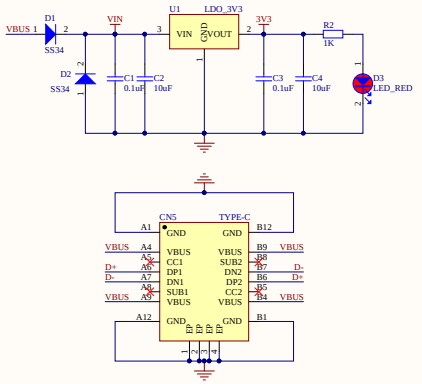

SWD

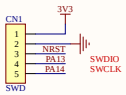

BOOT0

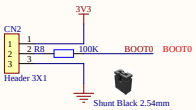

RESET KEY

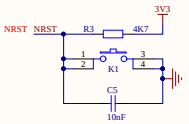

USER KEY

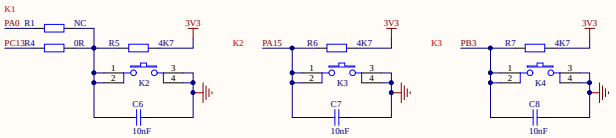

DC-DC

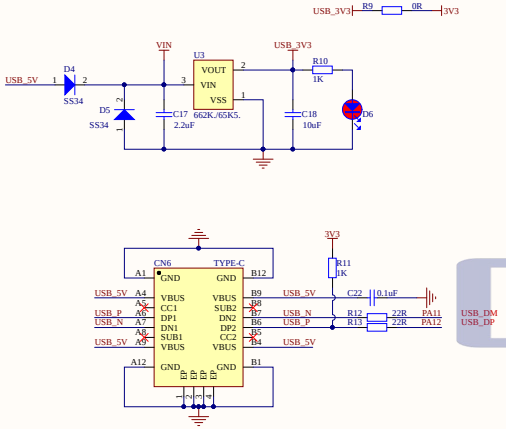

MCU

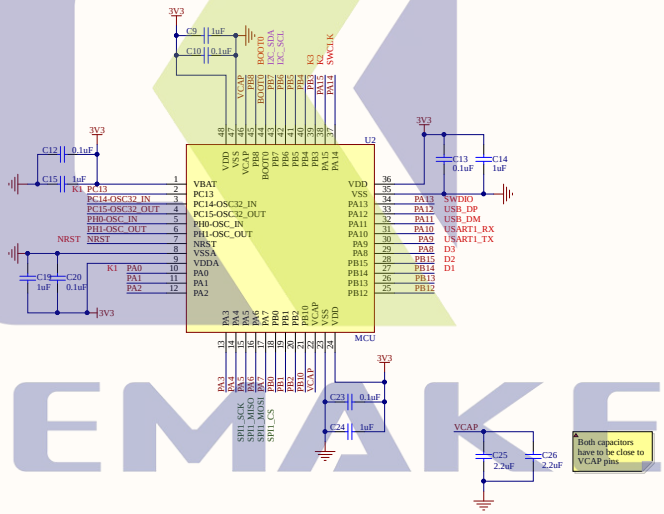

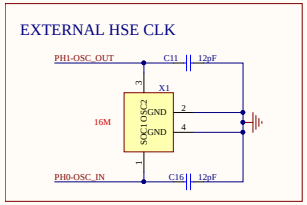

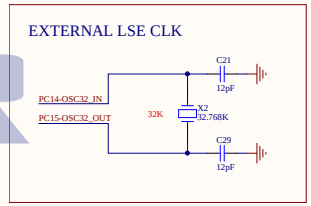

UART

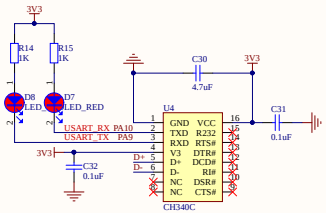

USER LED

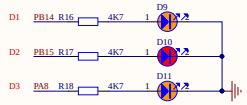

CONNECT

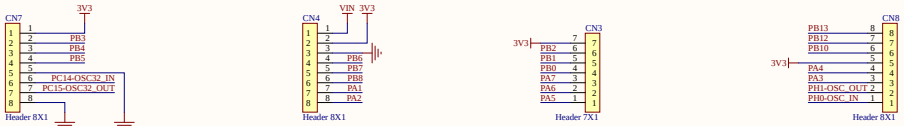

Title	STM32H503-SENSOR-V1.0
TEL: 15622736378	Revision:*
Date: 2024/11/6 Time: 11:31:41	Sheet * of *
File: C:\Users\687\Desktop\STM32H503_SENSOR-V1.0.SchDoc	

COREMAKER 芯途创科