PCA9685 PWM Driver

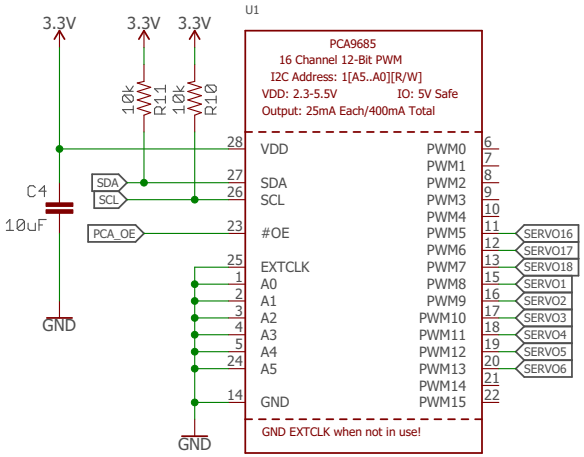

I2C Address: 0x40

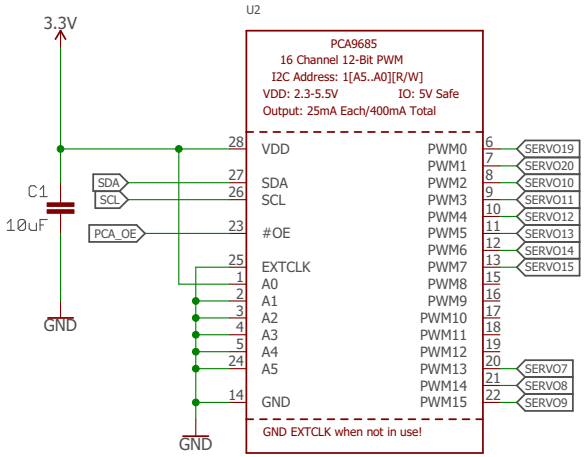

I2C Address: 0x41

Servos

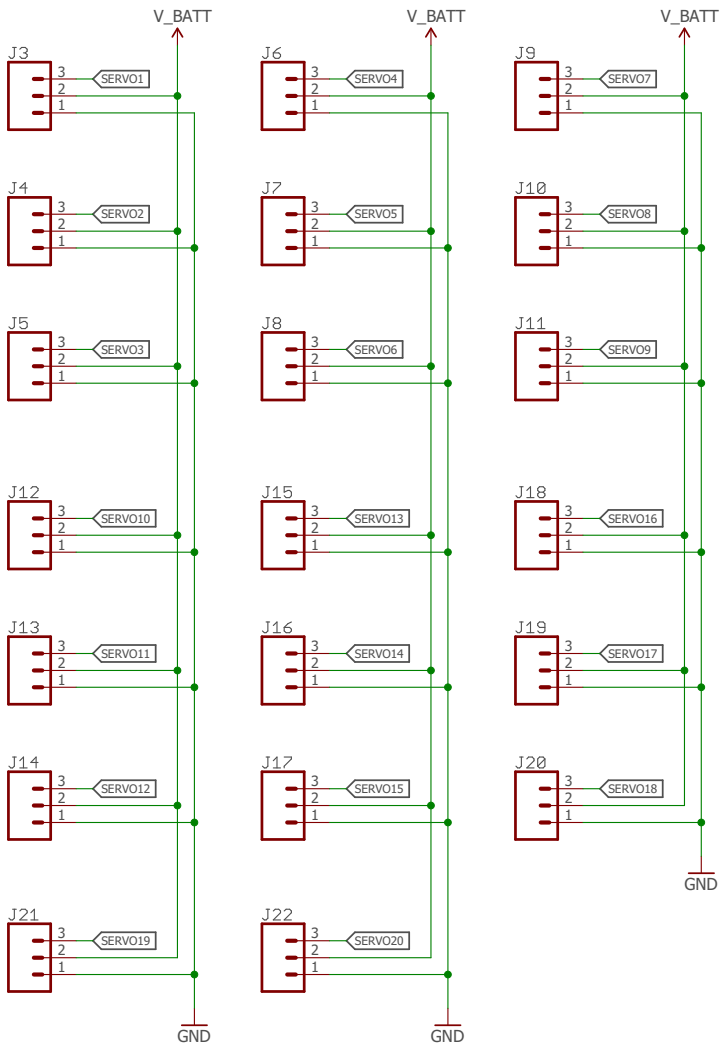

Power Supply

D1 / D2 are alternate parts

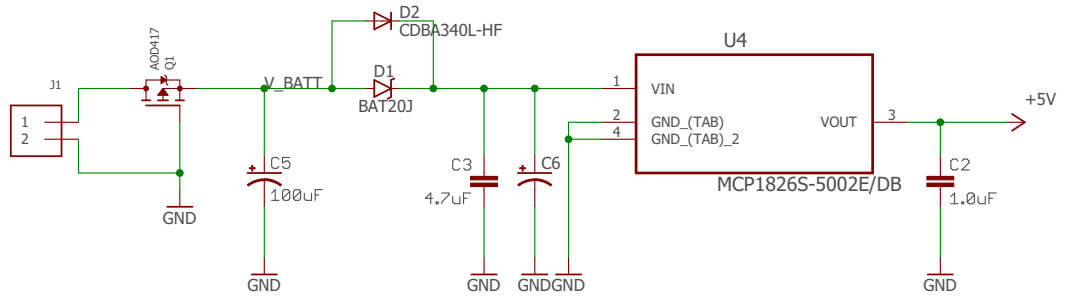

INPUT:
6V NiMH oder LiPo+6VBEC

MPU6050

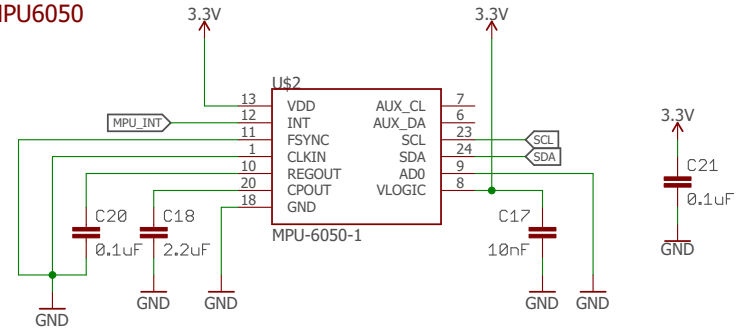

Headers

Header for optional OLED display

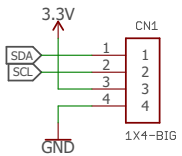

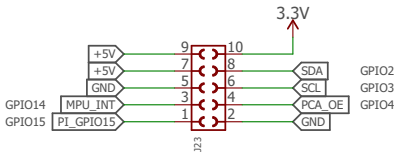

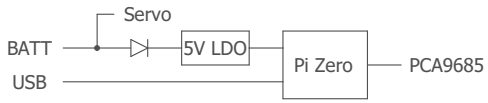

ZeroBug MK2 REV1
Maximilian Kern
12/2021