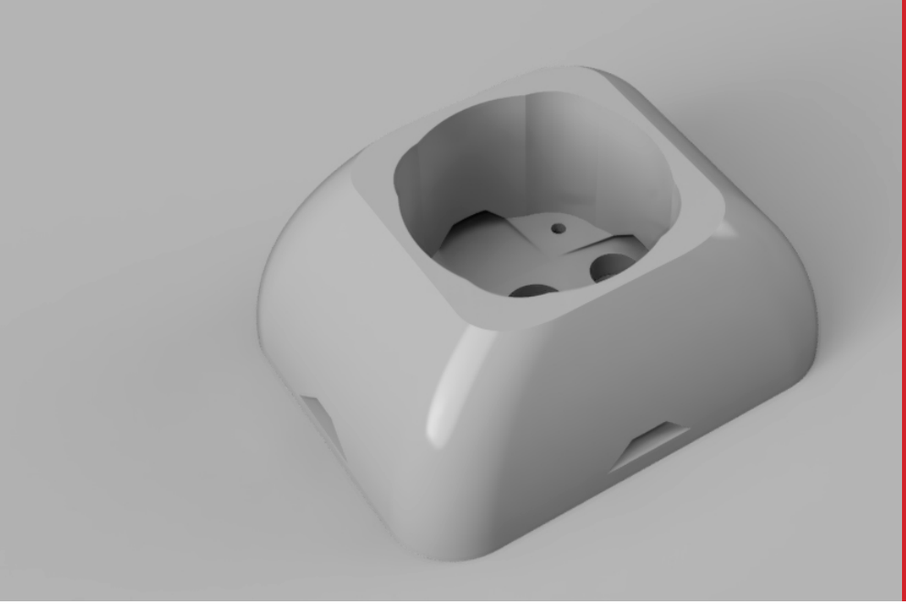

NOSE **CONE**

FINAL PROJECT

Summary

After my team had flown Iteration 1 of our 2026 Competition plane, we had found that the center of mass was too far forward, requiring us to attach Allen wrenches to the tail to more evenly distribute mass for flight. To better balance the plane for the next iteration, I was tasked with making a new nose cone design. I found that making a nose cone where the motor could be lodged within would bring the center of mass back more. Some concerns were raised about overheating the motor, but by adding exhaust holes near the bottom of the motor I was able to keep the motor at an optimal temperature for operation. Currently, the exhaust holes need to be angled further down, as they disrupt the air flow around the nose cone and the aircraft.

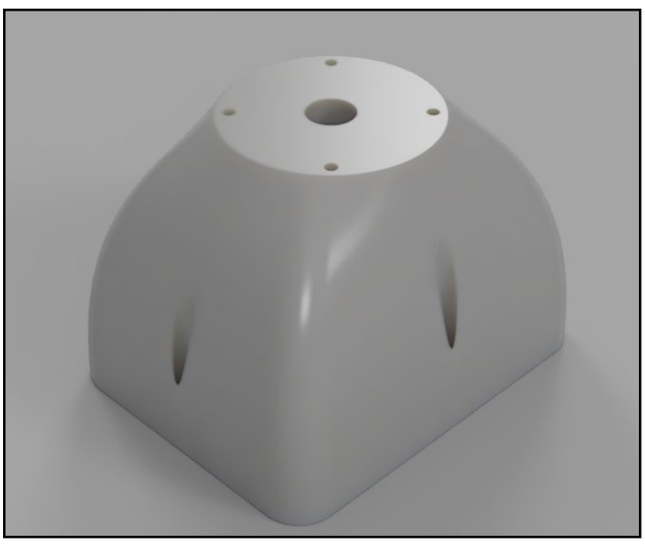

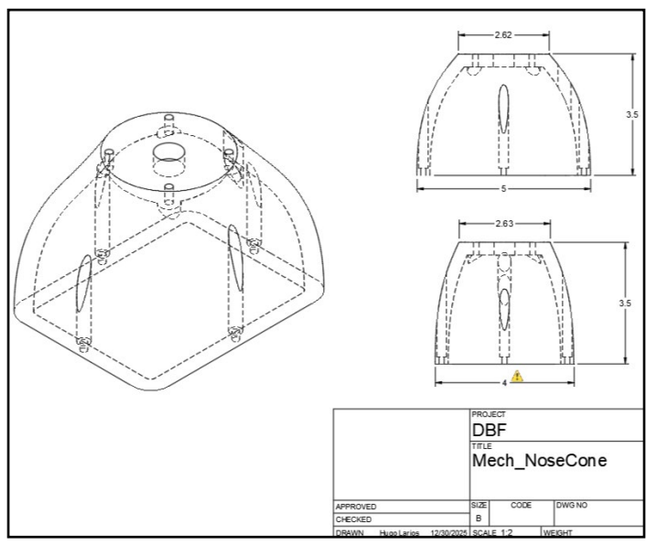

This nose cone seemed promising, but when my team went for our first test flight of the plane, we found that our center of gravity was too far forward. This was due to several things, such as the wing integration piece being heavier than expected, or the tail boom being shorter and lighter than initially planned. We managed to remedy this, however, by moving the majority of electronic components towards the back of the fuselage and attaching an Allen wrench to the tail boom. This had worked for our maiden flight, which gave us confirmation that our overall design was airworthy. This would not, however, be possible for competition, so changes to the plane needed to be made in order to have an ideal location for the center of mass.

One possible contributor to this change would be the nose cone. I was given permission to attempt altering the nose cone, so I began with the premise of making the nose cone shorter. It would, of course, move the center of gravity a bit further back, but I then decided to alter my plan and move the majority of the motor within the nose cone. This would move the center of mass much further back without making the nose cone too short. I came up with the initial design shown below.

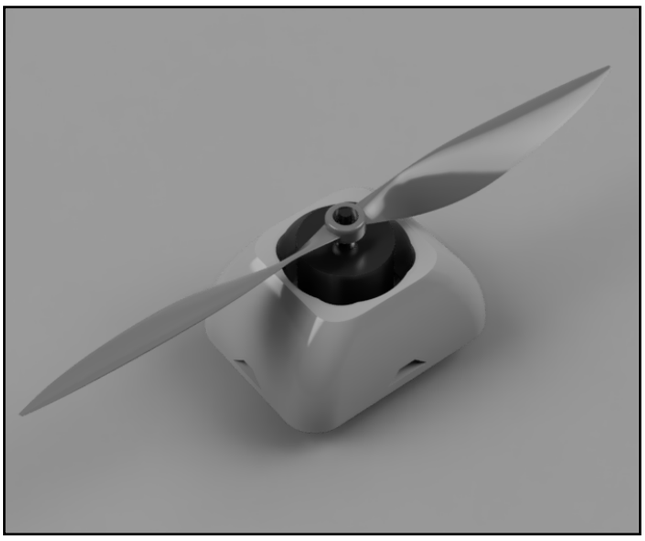

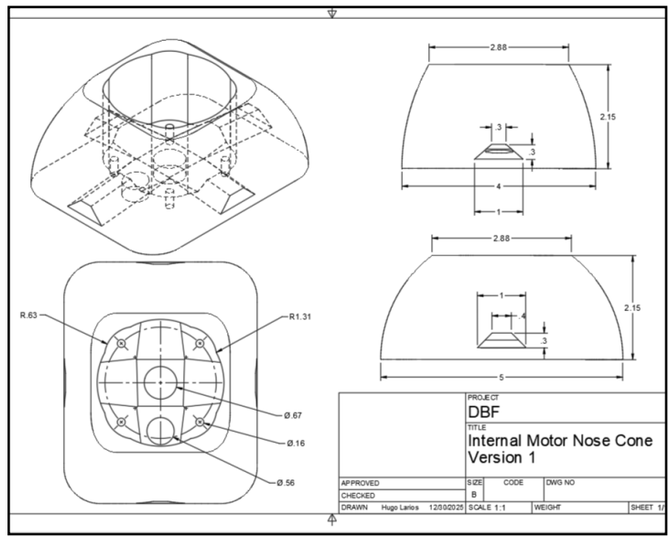

Testing and Further Refinement

After getting some feedback, I refined the design and printed it out to test. To test that the exhaust holes were sufficient in preventing the motor from overheating, we would run a static thrust test with the nose cone attached to the testing rig. We ran the motor at full throttle for a few minutes to measure performance over time, and used a infrared digital thermometer to check if the motor was heating up. Our recorded data revealed that the motor was not heating up or losing performance efficiency, so we determined that it was a design we could move forward with. Some additional refinements were requested by my team, however: they felt as though there should be less flat space underneath the propeller, and that the exhaust holes should be larger.

Additionally, we found another problem by running the model through ANSYS. The streamline analysis below revealed that the exhaust holes were not angled steep enough. As is, the air flow through the exhaust holes would exit and disrupt the airflow over the whole plane. By making the exhaust holes rotated to a steeper angle, the exhaust flow might be better merged with the outside flow.

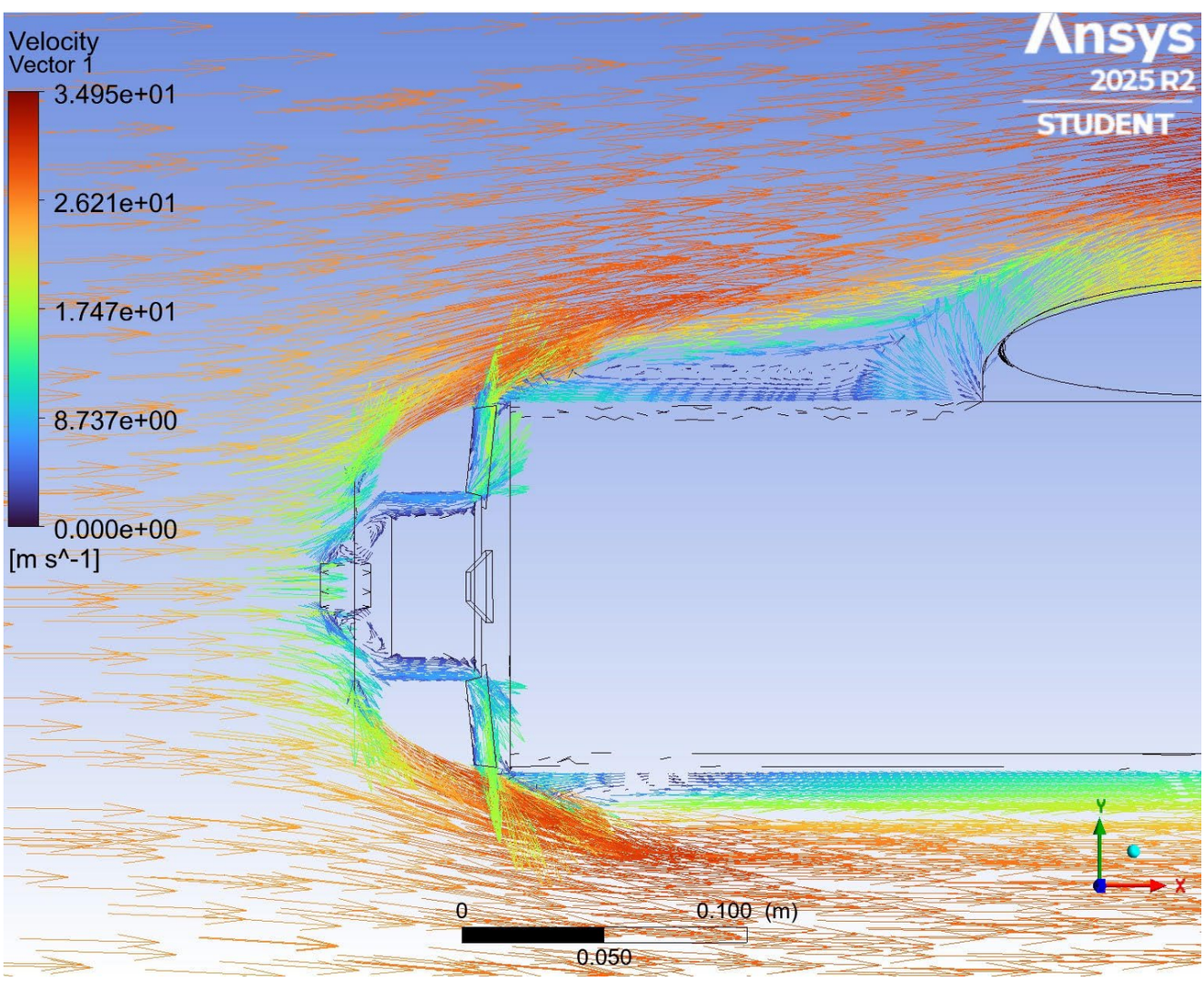

When making the new updates to the nose cone, I was able to solve another problem. Initially, with both the first nose cone we had used for iteration 1 and my initial redesign of the nose cone, we needed to use a motor mount to secure the motor to the nose cone. However, when putting the final touches on my final design, I removed the additional space taken from the motor mount so that the motor could be directly attached to the nose cone. My final design is shown below:

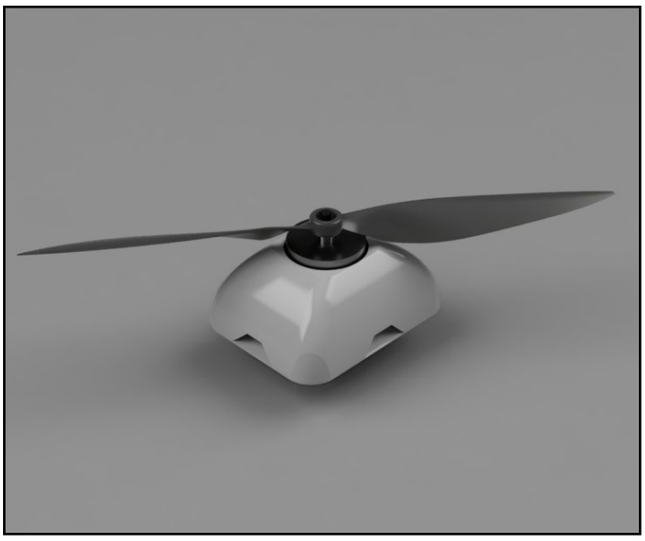

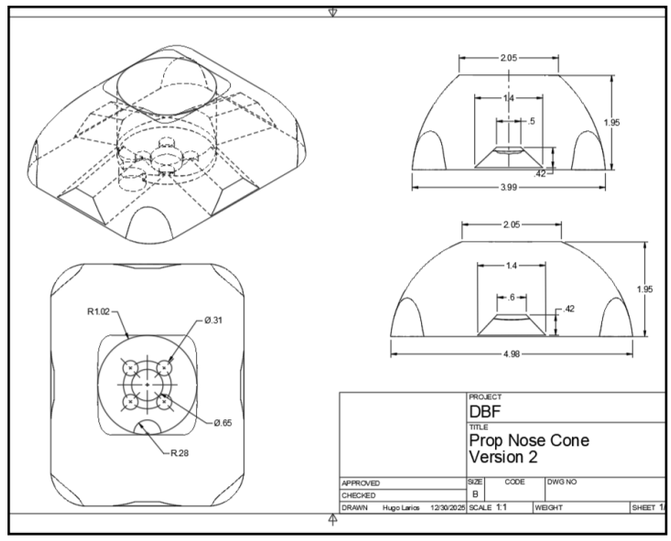

Future Considerations

Two future considerations for the design would be to completely remove the flat space from underneath the propeller and find ways to further reduce the overall weight of the nose cone. I'm saving these changes until the end of winter break, when we've been able to physically test the newest design of the nose cone. From there, I can get additional feedback from both testing and the rest of my team, so final improvements can be made before implementing the nose cone in the Iteration 2 plane. Additionally, my current designs are all created in Fusion 360, so I would like to recreate the newest design in Solidworks where the rest of my team is more familiar with using. This would allow them to apply their own changes if necessary and have their own designing timeline to analyze.