THRUST **TEST RIG**

FINAL PROJECT

Summary

As the propulsion subteam lead, I was responsible for selecting the electronic components that would go into the plane. However, there is a notable difference between calculated performance and actual performance, so I created a testing rig to measure the static thrust of our battery, motor, and propeller combinations. Using the data gathered from this testing rig, I compared it to our calculated forces to determine if the components are were functioning as intended, or if something else needed to be done. Currently, we are working to integrate a shunt resistor into our circuit. This will aid us in finding the voltage and current running through the system, allowing us to determine if the motor is reaching its maximum rpm.

Initial Design Considerations

In previous years, we have had different variations of a static thrust rig. When I had first joined, my team used a metal L-bracket with an electronic scale to measure the approximate thrust force created by a the motor and propeller. We then moved towards using load cells, particularly the HX711 Load Cell, which we wanted to utilize using Arduino. We gathered together spare metal components to create a frame and developed a program to pull the output data from the load cells.

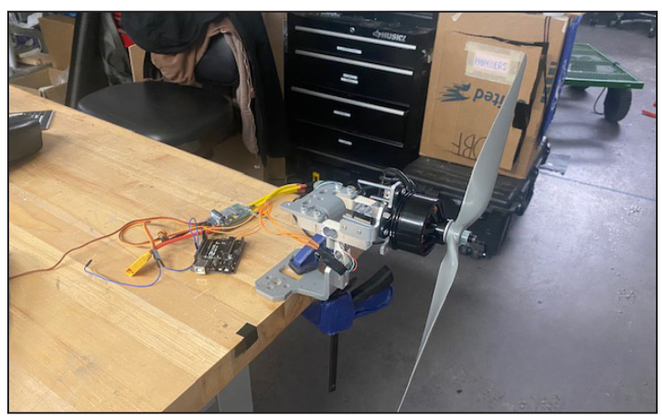

From this design, we were able to gather accurate data and effectively compare it to data we calculated using a software called eCalc. This was used during the 2024-2025 school year. Coming back to school for Fall 2025, we had found that one of our load cells had broken and our manufacturer had began changing the sizings of the components. This created a problem where new components could no longer be meshed with the current design, and because we needed to begin gathering data for our preliminary design review for the year's upcoming competition, we had to quickly create a new thrust rig. Creating this new rig became my responsibility as the subteam lead.

I determined that a set of certain parameters should be met:

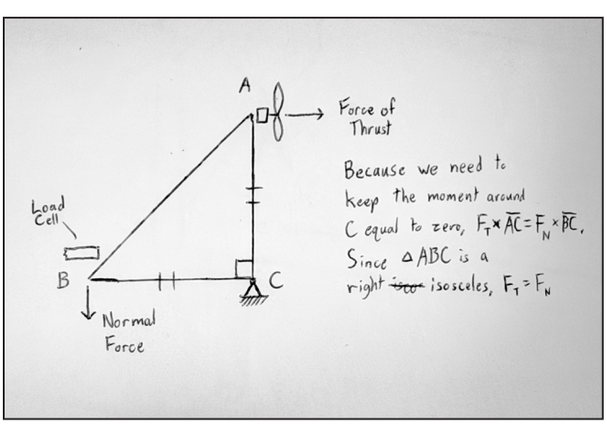

With these considerations in mind, I created a simple design utilizing a 2D simplified truss analysis. The main idea was to start with a right isosceles triangle truss with points ABC as shown above:

- The design should remain simple. This would make construction quicker, since my subteam at the time trying to meet a deadline. This also led us to reusing the same program with differently sized load cells.

- The design should be made in a way to accurately determine the thrust force of a motor and propeller.

- The design should be built with modifications in mind. (Measuring throttle, voltage through system, current through system, etc.)

Point C would be pinned, yet free to rotate. Point A would experience a thrust force from the motor and propeller. To create a moment equilibrium, I could apply a downward normal force on point B. This normal force could be created by holding point B down with an end of the load cell, which would then detect its own normal force. By making the truss an isosceles right triangle, we can calculate that the normal force experienced by the load cell would be equal to that of the thrust force created by the motor and propeller. Now with this design in mind, I made a quick CAD and gathered parts for construction.

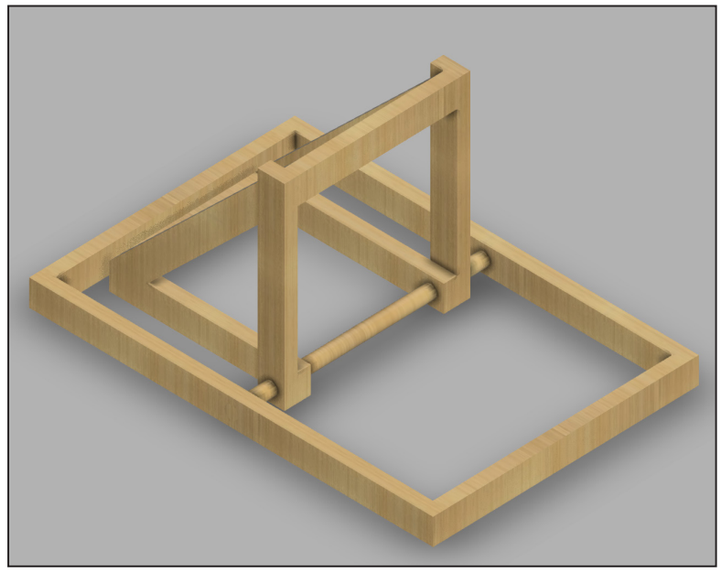

Gathering Data (Software and Circuitry)

We gather data about the thrust force using a HX711 load cell, but how do we go about this? A load cell come in two main components: the bar that undergoes stress-strain, and a chip that measures the changed resistance within this bar. We can solder the two together using spare wirings and plug the chip into an Arduino. The load cell is rated for a particular appliable load (in our case it is 10kg), so we first need to find a calibration factor to run our tests. By plotting the change of values between no weight and adding a 50 gram weight to the load cell, we can get a slope factor that acts as a calibrator. So whenever a weight is placed on the load cell, using this number as a slope factor (y = mx + b), we should get an accurate reading for the load applied.

This methodology makes sense, as stress vs. strain applied to the load cell should be linear up until the yield strength of the load cell (per materials and their elastic modulus). However, because we will never place a load to reach that point, our method of calibration will apply.

Associated Code:

```
#include <Q2HX711.h>

const byte hx711_data_pin = 3;
const byte hx711_clock_pin = 4;

float y1 = 50.0; // calibrated mass to be added
long x1 = 0L;
long x0 = 0L;
float avg_size = 10.0; // amount of averages for each
mass measurement

Q2HX711 hx711(hx711_data_pin, hx711_clock_pin); // prep
hx711

void setup() {
  // put your setup code here, to run once:
  Serial.begin(9600); // prepare serial port
  delay(1000); // allow load cell and hx711 to settle
  // tare procedure
  for (int ii=0; ii<int(avg_size); ii++){
    delay(10);
    x0 += hx711.read();
  }
  x0/=long(avg_size);
  // Serial.println(x0); (Debug Code for x0 value)
  Serial.println("Add Calibrated Mass for Cell 1");
  // calibration procedure (mass should be added equal
to y1)
  int ii = 1;
  while(true){
    if (hx711.read()<x0+1000){
    // Serial.println(hx711.read());
    }
    else {
      ii++;
      delay(2000);
      for (int jj=0;jj<int(avg_size);jj++){
        x1+=hx711.read();
      }
      x1/=long(avg_size);
      break;
    }
  }
  // Serial.println(x1); (Debug Code for x1 value)
  Serial.println("Calibration Complete");
  delay(5000);


void loop() {
  // put your main code here, to run repeatedly:
  // Serial.println(hx711.read()/1.0);
  long reading = 0;
  for (int jj=0;jj<int(avg_size);jj++){
    reading+=hx711.read();
  }
  reading/=long(avg_size);

  // calculating mass based on calibration and linear fit
  float ratio_1 = (float) (reading-x0);
  float ratio_2 = (float) (x1-x0);

  float ratio = ratio_1/ratio_2;

  float mass_1 = y1*ratio;

  Serial.print("Raw 1: ");
  Serial.print(reading);
  Serial.print("; Mass: ");
  Serial.println(mass_1);

  Serial.print("Calibration: ");
  Serial.println(float ratio);
}
```

Now with the recalibration number, I modified the program to just give us the force detected by the load cell in grams. Now with program done for the load cell, I integrated the load cell into the system. The system itself consisted of a LiPo 4200 mAh - 35/50C Battery, a Scorpion SII-4025-520 (520) Motor, an ESC rated for 120 Amps, a fuse rated for 80 Amps, a AR8020T DSMX 8-Channel Telemetry Receiver, the HX711 Load Cell, an Arduino, and a servo battery (only powers the receiver). A wiring diagram can be seen here:

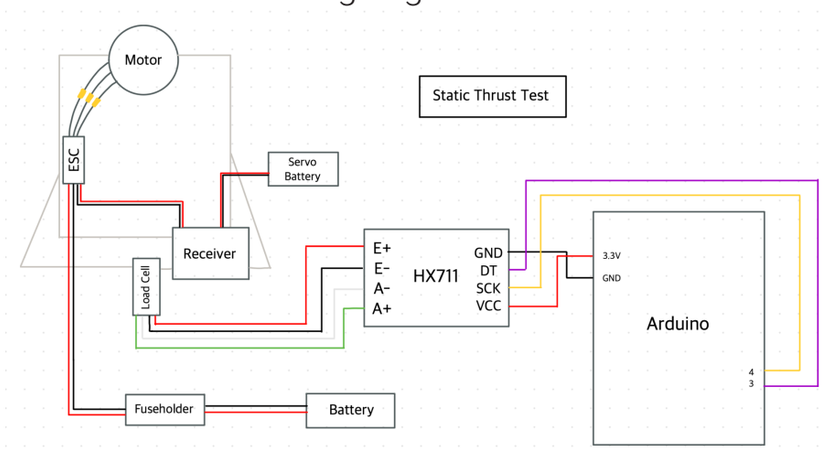

The circuit runs as so: The LiPo battery provides the main power to the motor and propeller, which runs through a fuse and the ESC. The ESC controls the amount of current that is fed to the motor and translates signals, while the fuse acts as a safety mechanism in case the battery overwhelms the system. The ESC notably has its red wire cut from connecting to the receiver, and this is to ensure that the receiver isn't powered by the LiPo battery, but can still provide the ESC and motor the signals received from a transmitter. The HX711 load cell and Arduino are part of a separate system, powered by and feeding data to a computer.

Testing

With the load cell operational and a design set, my team and I began building the rig. Because of our deadline, it was decided that wood would be a fitting material for our prototype. Though it wouldn't be as sturdy as metal, it would still serve us for the meantime. We assembled the wooden frame together and used a steel pipe as the hinge, then went out to test. After some trouble-shooting, we were able to gather data!

Our program would provide a thrust value every two seconds, so I utilized the data streamer asset of Microsoft Excel to collect and record the data for our motor and battery. For testing, I would switch up the propeller dimensions to analyze their performance, then compare it to values I had found on eCalc. I did this again with a different battery, same model but rated at 4500 mAh instead of 4200 mAh. The data we found between using the batteries were similar, but it was decided that the 4200 mAh LiPo battery would be used during competition because of its higher performance.

When graphing our data, I noticed a discrepancy between our testing results and the ones provided by eCalc. Past 80% of the maximum possible thrust, the test data begins to plateau whereas the calculated continued to rise. This was initially worrisome, since I had believed that there was something in the system that was preventing the motor from reaching its full potential. However, I looked back at the data that my subteam had gathered from the previous year's thrust test and found that the same phenomenon was present. My conclusion to this was that there was some flaw in the sizing software, where it predicted that thrust would only ever increase instead of leveling out towards the end. Either way, the majority of the test data agreed with the calculations, so I believe that the model is still good enough to use.

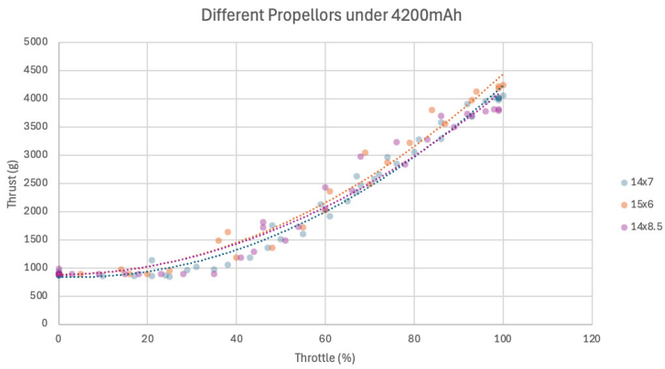

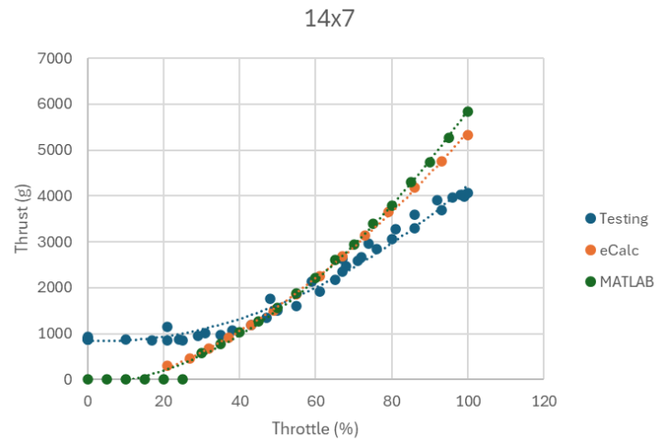

Future Development

There is still a lot of work that could be done to improve the testing rig. I believe that there is a lot more information that we can get out of the testing rig, so my team and I are working on implementing a shunt resistor. This device would allow us to also plot power, current, and voltage alongside our thrust force data, allowing us to see if our motor is spinning its maximum rpm. This would provide us with additional insight into whether the discrepancy in data comparison is due to a program error or due to the rig design. My team has already begun testing the shunt resistor on its own, and soon I can implement it in the system. The diagram below dictates how I believe the shunt resistor can be integrated into the system.

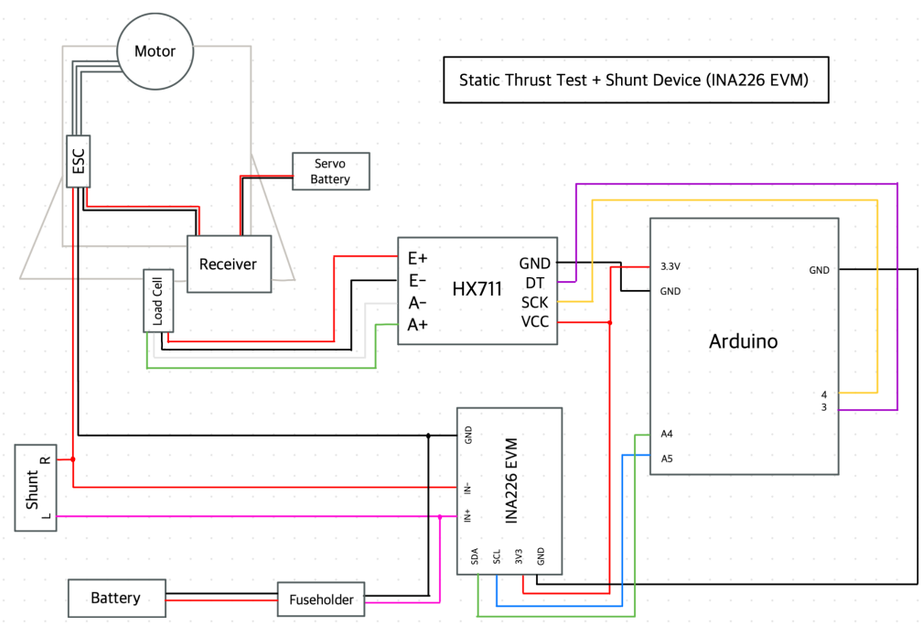

I also believe that there is also much redesign we can do to the system. Our rig is large and made of wood, with large pieces having cracks in them due to wood screws and brackets being used to make the rig as sturdy as possible. Because of the wooden components, a certain amount of give was observed when performing tests, which may have contributed to slight inaccuracies. A new design should be made out of smaller metal components, to reduce size and make the moment arm dimensions of the truss more precise. A universal motor mount can be 3D printed and placed where the motor will be, so that any motor in the future can be used with this testing rig.

Lastly, a part of my subteam is concurrently working on a dynamic thrust rig. The design for this will be significantly different from that of the static thrust rig but would allow us to measure thrust data in moving air. A prototype is being worked on, and should be finished by competition in the spring of 2026. Either a separate project, or further writing will be added upon further detail.