Name: Hovik Grigoryan

Date of submission: 02/23/2026

Problem set number: #3

Due date: 02/24/2026

Acknowledgement:

No help

Problem 1:

Known:

Radius R, length L, heat generation rate $\dot{q}$, ambient temperature T_∞, heat transfer coefficient h, thermal conductivity k, density ρ, heat capacity c_p, at x = 0, $T = T_1$, at x = L, $T = T_\infty$, at t = 0, uniform temperature T_i.

Find:

(a) Write an energy balance equation and express terms in terms of T (for the rod) (b) Derive a governing equation for the temperature profile and simplify (c) Write boundary conditions and initial conditions for the governing differential equation

Schematic:

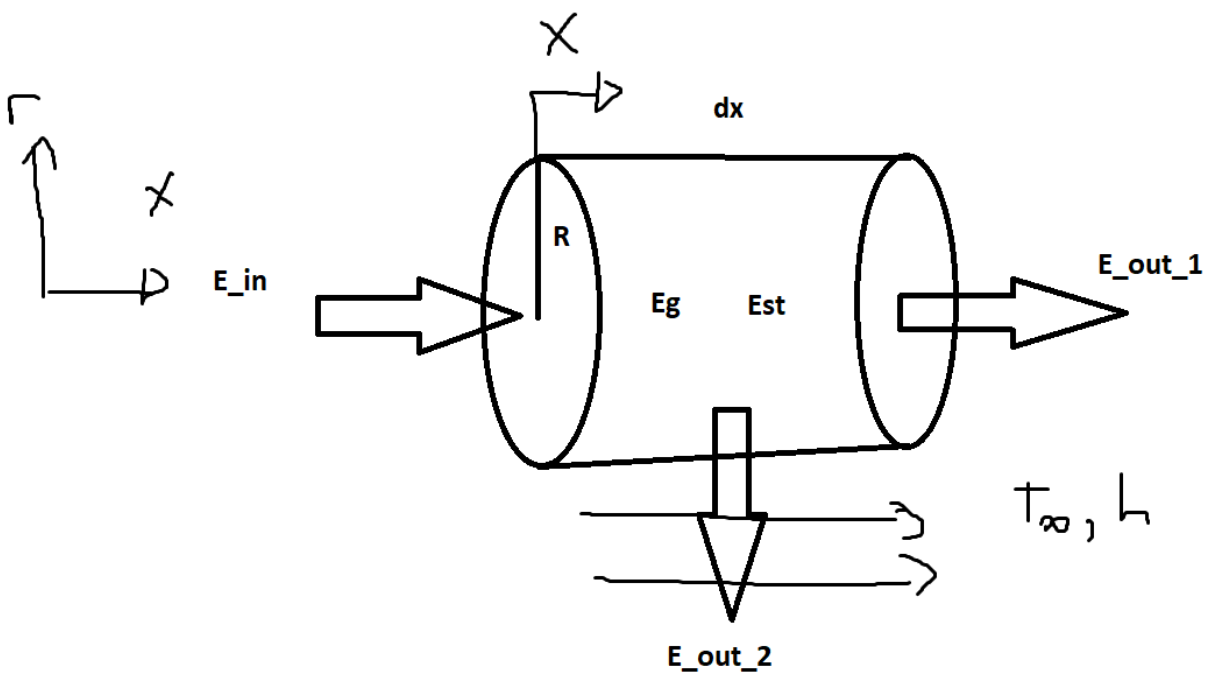

Properties:

R, L, $\dot{q}$, T_∞, h, k, ρ, c_p, at x = 0, $T = T_1$, at x = L, $T = T_\infty$, at t = 0, uniform temperature T_i.

Assumptions:

(1) No radiation (2) uniform volumetric heat generation rate (3) constant air properties (4) constant rod properties (density etc) (5) 1D heat transfer (6) Radially uniform heat (7) Very long rod

Analysis:

(a)

$$\dot{E}_{in} + \dot{E}_g - \dot{E}_{out,1} - \dot{E}_{out,2} = \dot{E}_{st}$$

$$\dot{E}_{in} = q_x =- k * A_c \frac{dT}{dx}, \quad \dot{E}_g = \dot{q} * A_c dx, \quad \dot{E}_{out,1} = q_x + \frac{dq_x}{dx} dx,$$

$$\dot{E}_{out,2} = h * A_s (T - T_\infty) = h * P(T - T_\infty) dx, \quad \dot{E}_{st} = \rho c_p V \frac{dT}{dt} = \rho c_p A_c dx \frac{dT}{dt}$$

Putting the equations together into the energy balance equation:

$$q_x + \dot{q} * A_c dx - (q_x + \frac{dq_x}{dx} dx) - h * P(T - T_\infty) dx = \rho c_p A_c dx \frac{dT}{dt}$$

$$\dot{q} * A_c dx + k * A_c \frac{d^2T}{dx^2} dx - h * P(T - T_\infty) dx = \rho c_p A_c dx \frac{dT}{dt}$$

Cancel out dx for all the terms:

$$\dot{q} * A_c + k * A_c \frac{d^2T}{dx^2} - hP(T - T_\infty) = \rho c_p A_c \frac{dT}{dt}$$

Divide all terms by A_c:

$$\dot{q} + k \frac{d^2T}{dx^2} - \frac{hP}{A_c}(T - T_\infty) = \rho c_p \frac{dT}{dt}, \quad P = 2\pi R, \; A_c = \pi R^2$$

$$\dot{q} + k \frac{d^2T}{dx^2} - \frac{2h}{R}(T - T_\infty) = \rho c_p \frac{dT}{dt}$$

(b)

$$\dot{q} + k \frac{d^2T}{dx^2} - \frac{2h}{R}(T - T_\infty) = \rho c_p \frac{dT}{dt} \quad => \quad \frac{\dot{q}}{\rho c_p} + \frac{k}{\rho c_p} \frac{d^2T}{dx^2} - \frac{2h}{R\rho c_p}(T - T_\infty) = \frac{dT}{dt}$$

We can define $\frac{k}{\rho c_p} \equiv m$

$$\frac{dT}{dt} = m \frac{d^2T}{dx^2} + \frac{\dot{q} m}{k} - \frac{2hm}{kR}(T - T_\infty)$$

(c)

At x = 0: T(0, t) = T_1 => $\frac{dT}{dt} = \frac{\dot{q} m}{k} - \frac{2hm}{kR}(T_1 - T_\infty)$

At x = L: Heat conduction to the tip is equal to the heat convection into the air, therefore:

$$- k \frac{dT}{dx}\Big|_{x=L} = h(T(L, t) - T_\infty)$$

Since the rod is very long, this approximates to $T(L, t) = T_\infty$

At t = 0: T(x, 0) = T_i

Problem 2:

Known:

$L_A = 30cm = 0.3m$, $\dot{q}_B = 0$, $L_B = 10cm = 0.1m$, $k_B = 30\ W/(m * K)$, $T_\infty = 20^oC$,

$h = 500\ W/(m^2 * K)$, $T_W = 115^oC$, $T_i = 100^oC$

Find:

(a) T_S (b) $\dot{q}_A$ (c) k_A (d) Plot the temperature profile across wall A and wall B

Schematic:

Schematic for part (a):

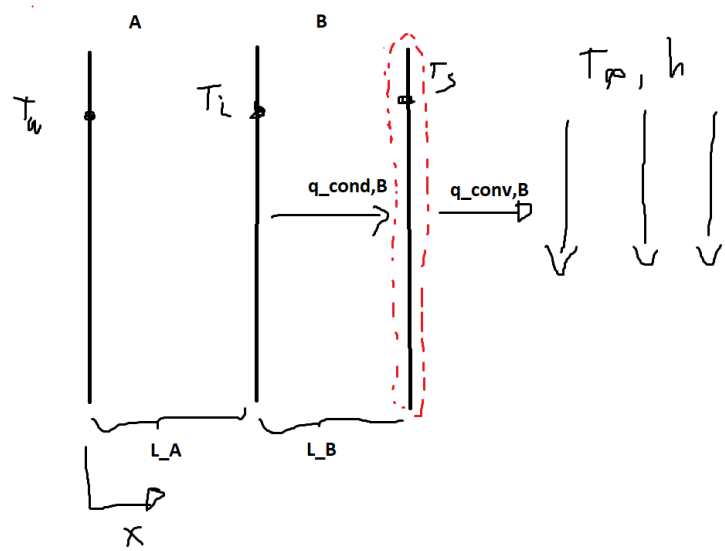

Schematic for part (b):

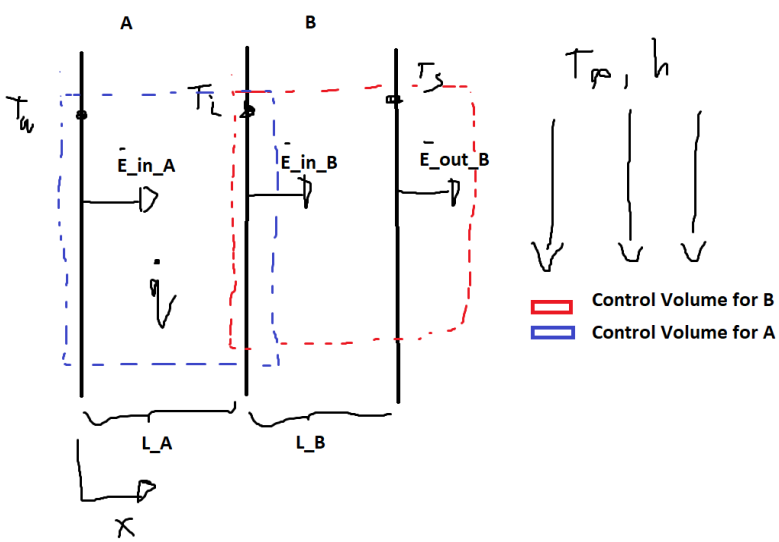

Schematic for part (c):

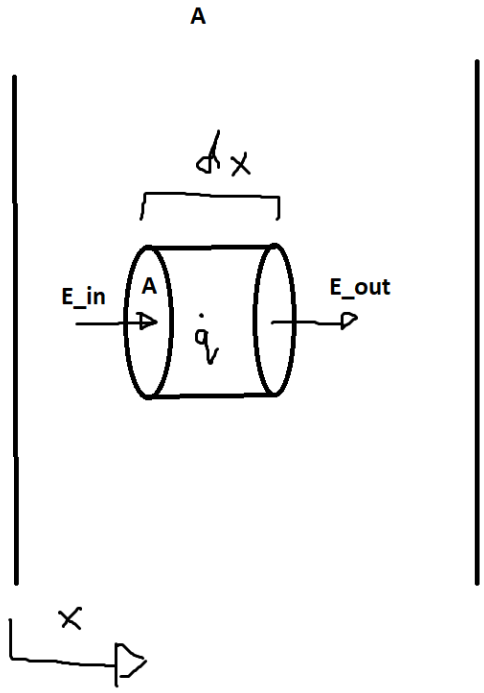

Properties:

$L_A = 30cm = 0.3m$, $\dot{q}_B = 0$, $L_B = 10cm = 0.1m$, $k_B = 30\ W/(m * K)$, $T_\infty = 20^oC$,

$h = 500\ W/(m^2 * K)$, $T_W = 115^oC$, $T_i = 100^oC$

Assumptions:

(1) Steady state (2) No radiation (3) uniform volumetric heat generation rate (4) constant air properties (5) constant wall properties (6) No heat generation within wall B (7) no heat stored within the walls

Analysis:

(a)

From Schematic 1, we take the outer (right-side) face of wall B as a control surface. There is a conduction through the wall B into the face, and convection from that face into the surrounding air. Those quantities are equal:

$$q_{cond,B} = q_{conv,B} \quad => \quad -k_B \frac{dT}{dx} = h(\Delta T) \quad => \quad -k_B\left(\frac{T_S - T_i}{L_B}\right) = h(T_S - T_\infty)$$

Solving the equation for T_S:

$$-30\left(\frac{T_S - 100}{0.1}\right) = 500(T_S - 20) \quad => \quad T_S = 50^oC$$

(b)

From Schematic 2, we consider the control volumes with equal surface area within wall B and wall A:

For wall B: $\dot{E}_{in,B} = \dot{E}_{out,B}$. For wall A: $\dot{E}_{g,A} = \dot{E}_{in,B}$

Therefore: $\dot{E}_{g,A} = \dot{E}_{out,B} \Rightarrow \dot{q}_A * L_A * A = h_B * A * (T_S - T_\infty) \Rightarrow \dot{q}_A * L_A = h_B(T_S - T_\infty)$

$\dot{q}_A = \frac{h_B(T_S - T_\infty)}{L_A} = \frac{500*(50-20)}{0.3} = 50000\ W/m^3$

(c)

From Schematic 3, perform an energy balance in a cylindrical dx section within wall A:

$\dot{E}_{in} + \dot{E}_g - \dot{E}_{out} = 0 \Rightarrow A * k_A * \frac{d^2T}{dx^2}dx + \dot{q}_A * A * dx = 0 \Rightarrow$

$\frac{d^2T}{dx^2} = -\frac{\dot{q}_A}{k_A} \Rightarrow \frac{dT}{dx} = -\frac{\dot{q}_A}{k_A}x + C$, since at x = 0 $\frac{dT}{dx}$ = 0 => C=0

$\frac{dT}{dx} = -\frac{\dot{q}_A}{k_A}x \Rightarrow T(x) = -\frac{\dot{q}_A}{2k_A}x^2 + C_2$, since at x = 0, T = 115^oC, => $C_2 = 115^oC$

Therefore, $T(x) = 115 - \frac{\dot{q}_A}{2k_A}x^2$. At x = L_A = 0.3m, T = 100^oC

$100 = 115 - \frac{50000*(0.3)^2}{2*k_A} \Rightarrow k_A = 150\ W/(m * K)$

(d)

Through wall A: at x[0; 0.3] $T(x) = 115 - \frac{50000}{300}x^2$

Through wall B: at x[0.3; 0.4] $T(x) = 100 - \frac{50}{0.1}(x - 0.3)$

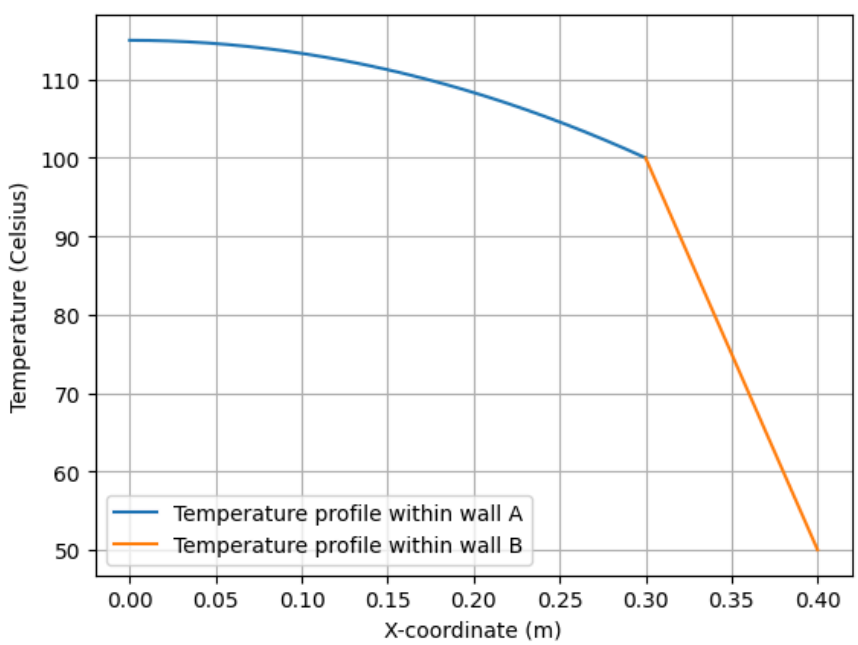

Plot generated with Python

Problem 3:

Known:

$k_b = 25W/(m * K)$, $k_{TBC} = 1W/(m * K)$, $R'' = 10^{-4} m^2 * K/W$, $T_{\infty,0} = 1616K$, $T_{\infty,i} = 400K$, $h_o = 1000W/(m^2 * K)$, $h_i = 500W/(m^2 * K)$, $L_B = 5mm$, $L_{TBC} = 0.5mm$, $T_{max} = 1200K$

Find:

(a) Draw a resistance network for the condition when there is no TBC. Find the temperature of the blade. Is it lower than T_{max}?

(b) Draw a resistance network for the condition when there is TBC. Find the temperature of the blade. Is it lower than T_{max}?

Schematic:

Schematic for part a:

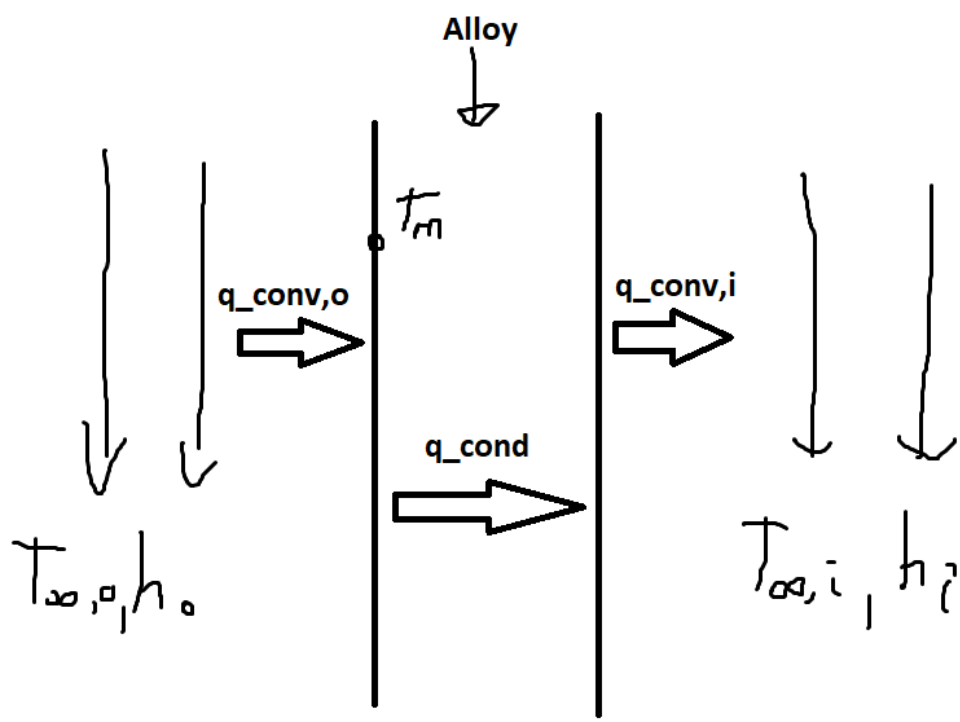

Schematic for part b:

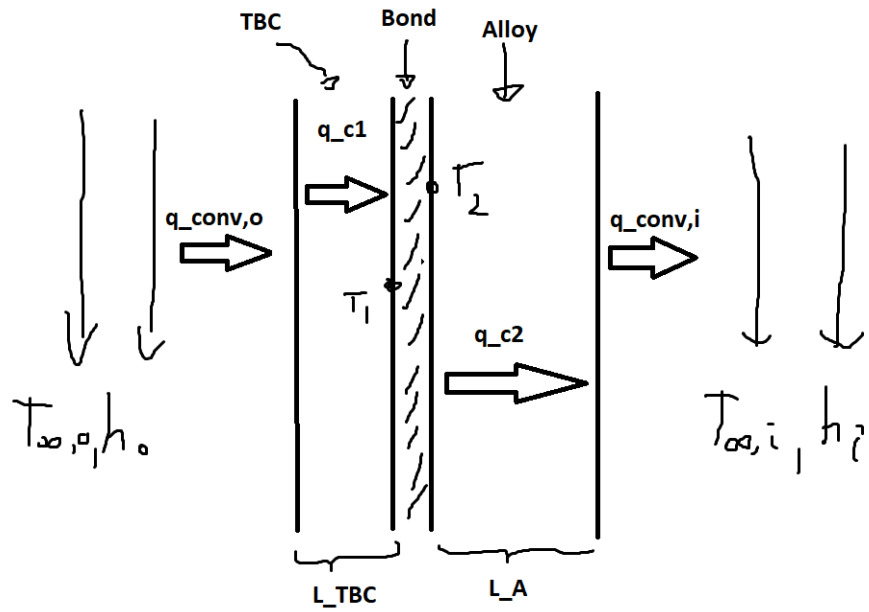

Properties:

$k_b = 25W/(m * K)$, $k_{TBC} = 1W/(m * K)$, $R'' = 10^{-4} m^2 * K/W$, $T_{\infty,0} = 1616K$, $T_{\infty,i} = 400K$, $h_o = 1000W/(m^2 * K)$, $h_i = 500W/(m^2 * K)$, $L_B = 5mm$, $L_{TBC} = 0.5mm$, $T_{max} = 1200K$

Assumptions:

(1) Steady state operation (2) No heat stored within TBC or alloy (3) No radiation (4) Constant air properties (5) 0 thickness bonding material (6) 1D heat transfer

Analysis:

(a)

From schematic 1, we can derive equations for thermal resistance for each heat transfer through the blade:

$$R''_{conv,o} = \frac{1}{h_o} = \frac{1}{1000\ W/(m^2 * K)} = 0.001\ m^2 K/W$$

$$R''_{cond} = \frac{L_b}{k_b} = \frac{0.005m}{25\ W/(m\ * K)} = 0.0002\ m^2 K/W$$

$$R''_{conv,i} = \frac{1}{h_i} = \frac{1}{500\ W/(m^2 * K)} = 0.002\ m^2 K/W$$

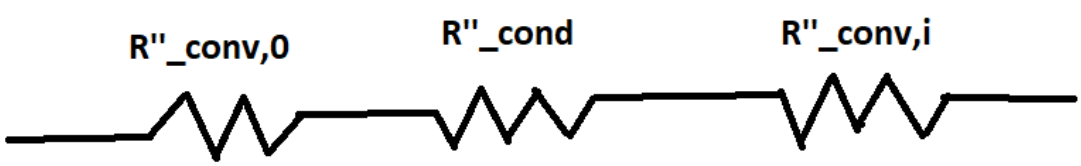

$R''_{total} = R''_{conv,o} + R''_{cond} + R''_{conv,i} = 0.0032\, m^2K/W$

The overall heat flux through the blade, $q'' = \frac{T_{\infty,0} - T_{\infty,i}}{R_{total}} = \frac{1616K - 400K}{0.0032 m^2K/W} = 380000 W/m^2$

$q'' = q_{conv,o} = h_o(T_{\infty,0} - T_s) \quad => \; T_s = T_{\infty,0} - \frac{q''}{h_o} = 1616K - \frac{380000 W/m^2}{1000\, W/(m^2*K)} = 1236K > T_{max}$

Therefore, this configuration does not keep the blade temperature below T_{max}

(b)

From schematic 2, we can derive equations for thermal resistance for each heat transfer through the blade:

$R''_{conv,o} = \frac{1}{h_o} = \frac{1}{1000\, W/(m^2*K)} = 0.001\, m^2K/W$

$R''_{cond,1} = \frac{L_{TBC}}{k_{TBC}} = \frac{0.0005m}{1\, W/(m\, *K)} = 0.0005\, m^2K/W$

$R''_{cond,2} = \frac{L_B}{k_B} = \frac{0.005m}{25\, W/(m\, *K)} = 0.0002\, m^2K/W$

$R''_{conv,i} = \frac{1}{h_i} = \frac{1}{500\, W/(m^2*K)} = 0.002\, m^2K/W$

$R'' = 0.0001\, m^2K/W$

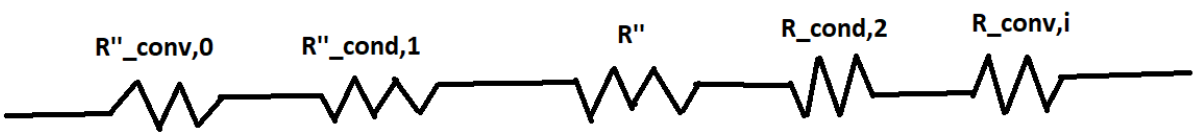

$R_T = 0.0038\, m^2K/W$

The heat transfer through the structure is $q'' = \frac{1616K - 400K}{0.0038 m^2K/W} = 320000 W/m^2$

$T_{\infty,0} - T_1 = q''(R''_{conv,o} + R''_{cond,i}) \quad => \; T_1 = 1136K$

$T_2 - T_1 = q'' * R'' = 32K \quad => \quad T_2 = 1136K - 32K = 1104K < T_{max}$

Therefore, this configuration ensures that the blade remains at a temperature below T_{max}.