MAE 3270

Final Course Project

Torque Wrench - Improved Design Project

Term: Fall 2025

Manuely Feliz Portes (mf833), Kaila Danielson(kmd284)

BASELINE DESIGN:

Results from MATLAB script:

```
max normal stress s_max = 12.80 ksi
load point deflection d = 0.091 in
safety factor for strength = 28.91 psi
safety factor for crack growth = 2.95 psi
safety factor for fatigue = 8.98 psi
strain at gauge = 375.00 microstrain
output = 0.38 mV/V
```

Stress:

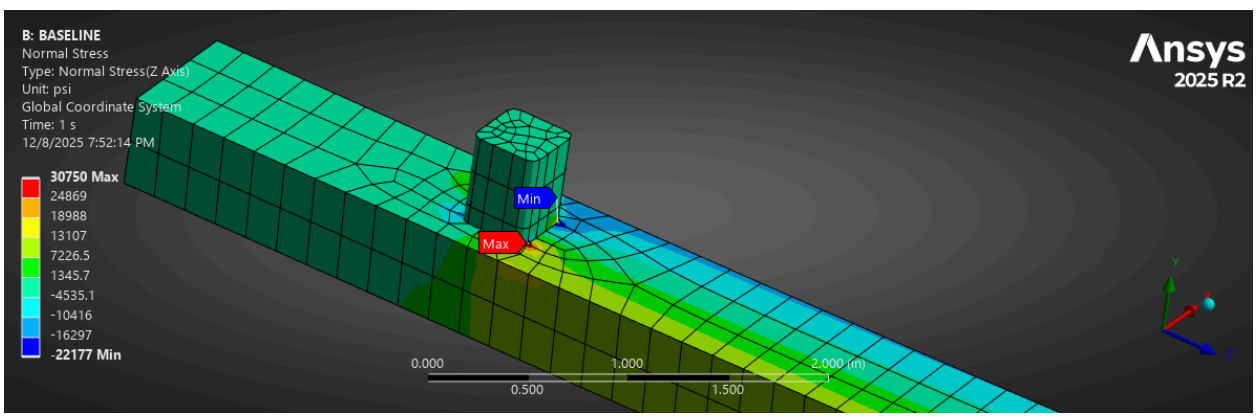

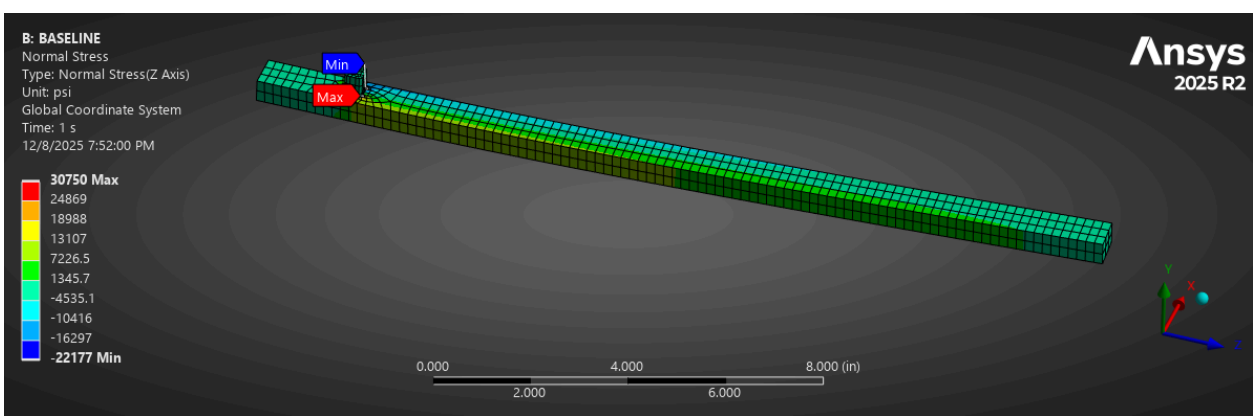

Strain:

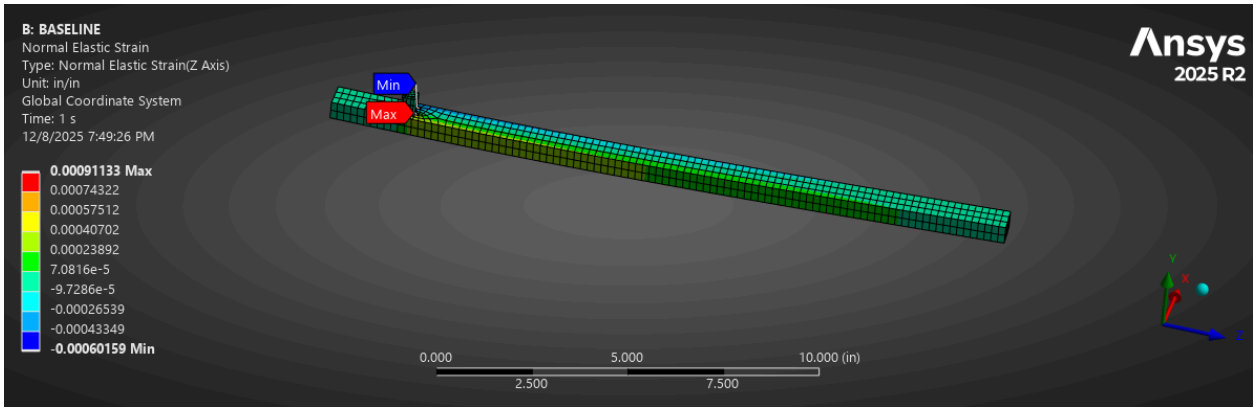

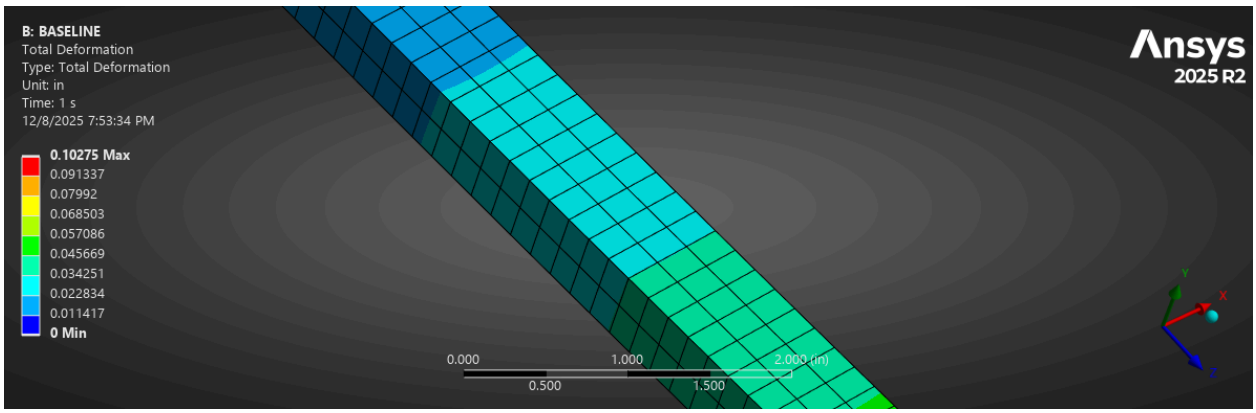

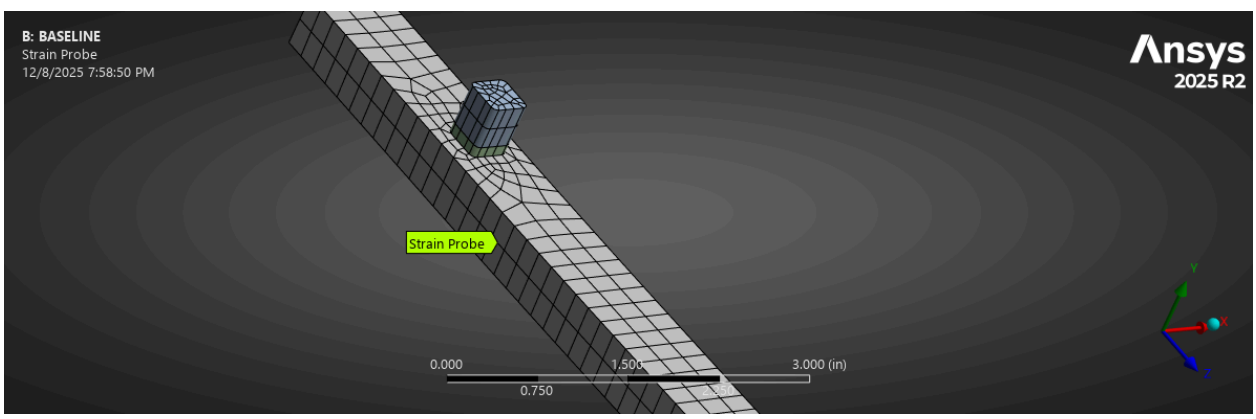

From our FEM analysis, we see that the strain at the location of the strain gauge is 3.75e-4.

Deformation:

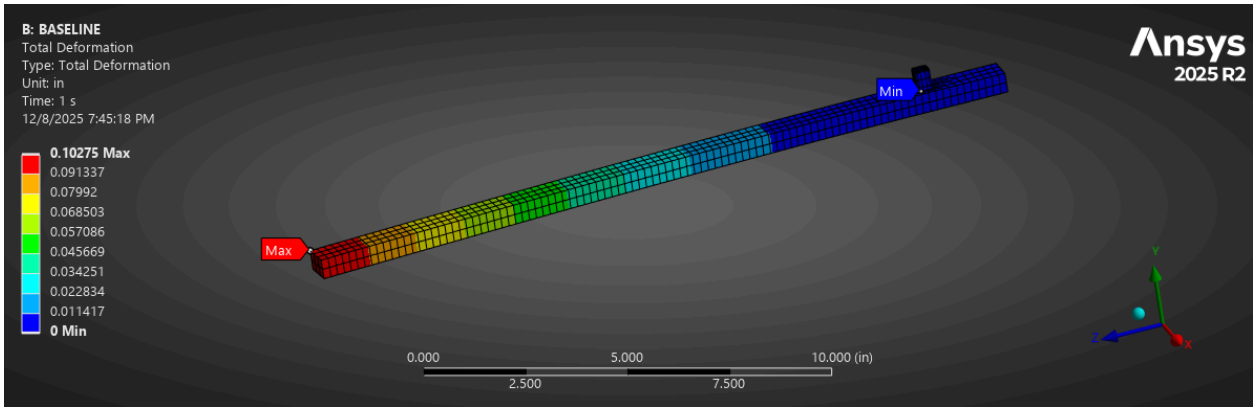

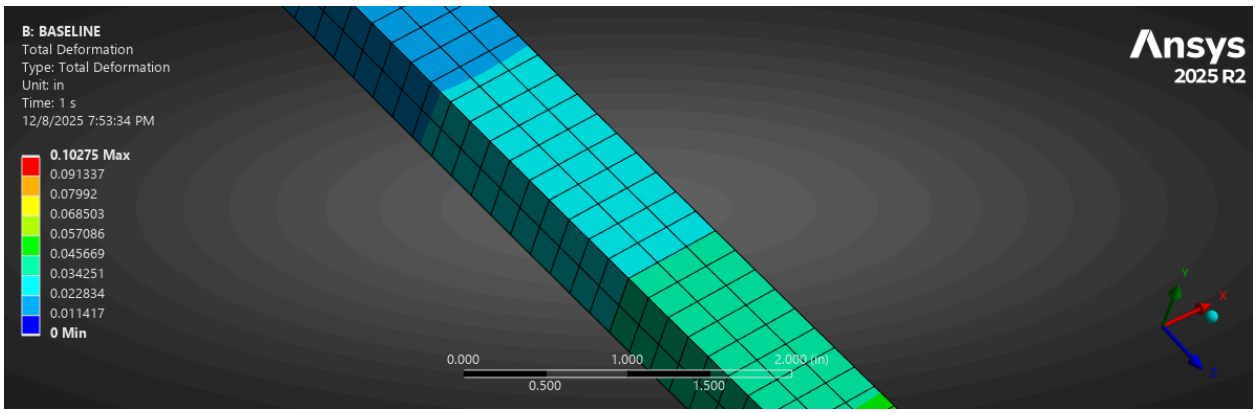

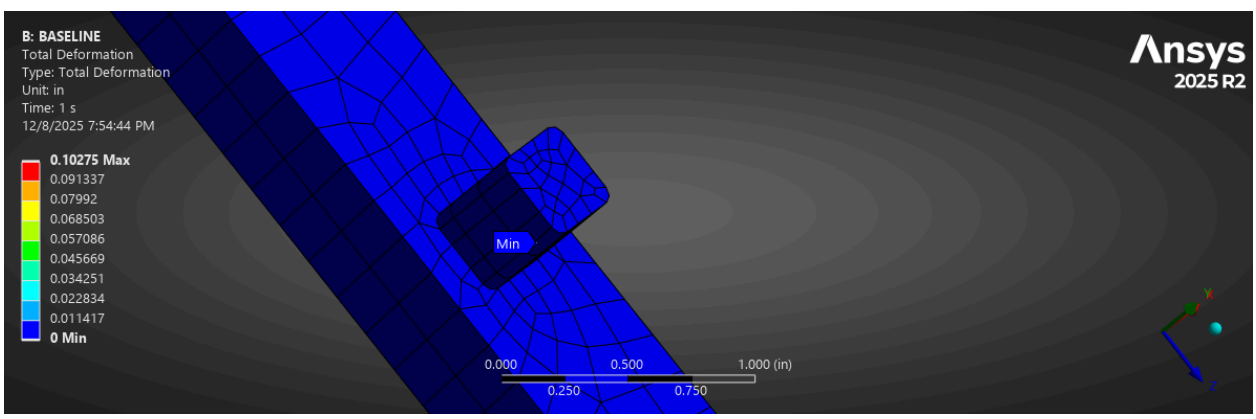

BASELINE: REFLECTIONS

1. As we can see from the photos for the deformation near the handle of the torque wrench, where the load is applied, the mesh lines remain perfectly orthogonal. We can see no visible warping in the mesh, which shows that beam theory is reasonably accurate in this area. On the other hand, at the drive, we see that the mesh lines are no longer orthogonal. This can be explained by the concentration of stresses in this area. We conclude that beam theory is not accurate in this area.
2. The maximum normal stress from the FEM is 30.750 ksi. This is significantly higher than what we calculated with the hand calculations. This is because the drive is connected to

the handle arm in the FEM. Additionally, the drive is not fully clamped to the handle of the wrench. When calculating by hand, we do not do stress concentrations for the connector and do not account for this.

3. From the FEM, the maximum normal stress (anywhere) is 30.750 ksi, the strain at the strain gauge is 3.75e-4, and the deflection at the load point is 0.10275 in.

OUR DESIGN:

Our CAD Model with relevant dimensions:

```
M = 600;
L = 16;
h = 0.75;
b = 0.50;
c = 1.0;
```

Figure 1: Rendering of the wrench's CAD Model

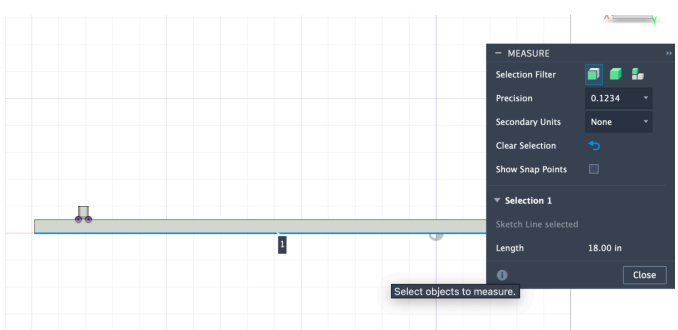

Figure 2: Total length of the wrench

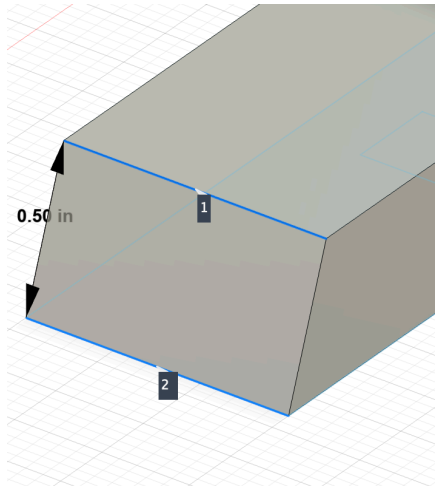

Figure 3: Dimensions of the height

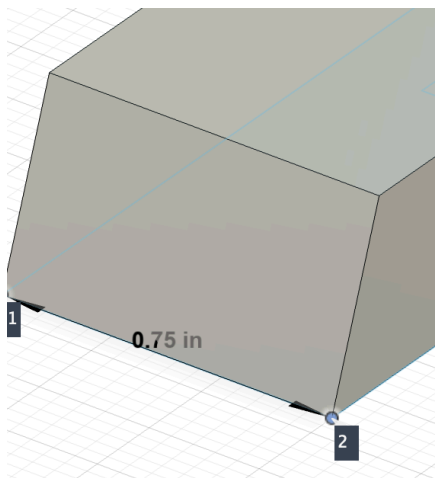

Figure 4: Dimensions of the width

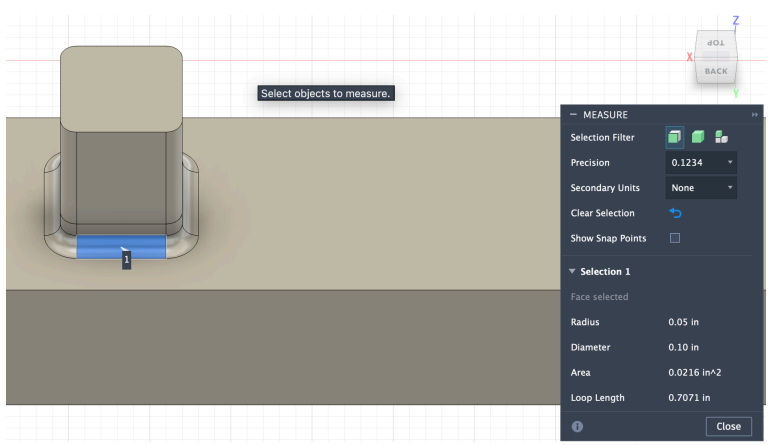

Figure 5: Dimensions of the fillet

Our Material:

The material we chose was Aluminum Alloy 7075 T6. This is one of the highest-strength aluminum alloys. It is also a nonferrous metal. It is used where strength is extremely critical and strength to weight ratio. The T6 temper indicates it has been heat-treated and aged to achieve its maximum strength and hardness. This material is widely used and respected in aerospace and defense structures.

The relevant materials extracted from GRANTA were:

- Young's Modulus: $E = 10.4 * 10^6$ psi
- Poisson's Ratio= 0.3
- Tensile strength: $S_u = 83 * 10^3$
- Fatigue strength: Fatigue= $25 * 10^3$ psi
- Fracture toughness: $K_{IC} = 24.3 * 10^3$ psi*sqrt(in)

3. **FEM Model Conditions**

The code:

```
% Geometries of torque wrench
% my torque wrench dimensions (used the upper range values from Granta)
M = 600;            % max torque (in-lbf)
L = 16;             % length from drive to where load is applied (in)
h = 0.75;           % width
b = 0.50;            % thickness
c = 1.0;            % distance from center of drive to center of strain gauge
E = 10.4 * 1e6;          % Young's modulus (psi)
nu = 0.3;          % Poisson's ratio
su = 83 * 1e3;        % tensile strength (use yield or ultimate depending on material) (psi)
KIC = 24 * 1e3;        % fracture toughness (psi sqrt(in))
sfatigue = 25 * 1e3;  % fatigue strength from Granta for 10^6 cycles%name = 'Titanium 6A1-4V Alloy (ELI, annealed)'; %  material name

% Given
N = 10^6;  % cycles
d_crack = 0.04;  % crack depth (in)
T = 600;   % input torque (lbf-in)

I = (b * h^3) / 12;
y = h/2;    % nuetral axis to edge

% calculate max normal stress
s_max = ((T * y)/I);  % max allowable stress
s_max_ksi = s_max * 1e-3;
fprintf('max normal stress s_max = %.2f ksi\n', s_max_ksi)

% calculate load point deflection
P = T/L;  % load
d = (P * L^3) / (3 * E * I);
fprintf('load point deflection d = %.3f in\n', d)


% safety factor results
Xo = su / s_max; % strength
fprintf('safety factor for strength = %.2f psi\n', Xo)

Ki = 1.12 * s_max * sqrt(pi*d_crack);
Xk = KIC/Ki; % crack growth
fprintf('safety factor for crack growth = %.2f psi\n', Xk)

Xs = sfatigue / s_max; % fatigue
fprintf('safety factor for fatigue = %.2f psi\n', Xs)


% strain gauge results
s_gauge = s_max * (L-c) / L; % stress at gauge (not equal to max stress)
strain = (s_gauge / E) * 1e6; % converted to microstrain
fprintf('strain at gauge = %.2f microstrain\n', strain)

% output
k = 2;
output = (k * strain * 1e-6) / 2 * 1000;
fprintf('output = %.2f mV/V\n', output)
```

The results from the hand calculations:

```
max normal stress s_max = 12.80 ksi
load point deflection d = 0.280 in
safety factor for strength = 6.48 psi
safety factor for crack growth = 4.72 psi
safety factor for fatigue = 1.95 psi
strain at gauge = 1153.85 microstrain
output = 1.15 mV/V
```

We see that our design passes all safety requirements, and our torque wrench sensitivity is 1.154 mv/.

ANSYS results:

Total deformation:

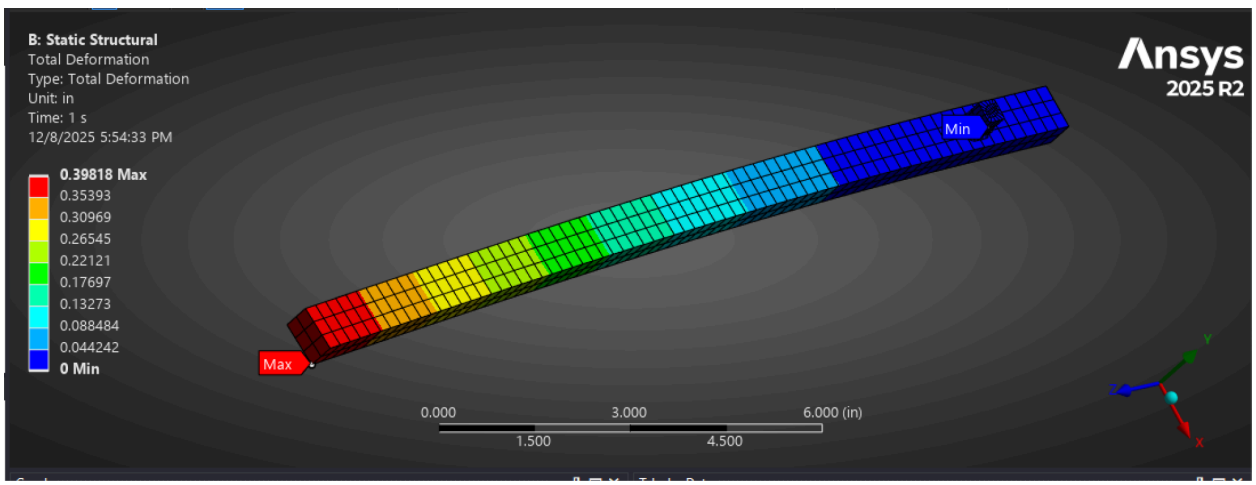

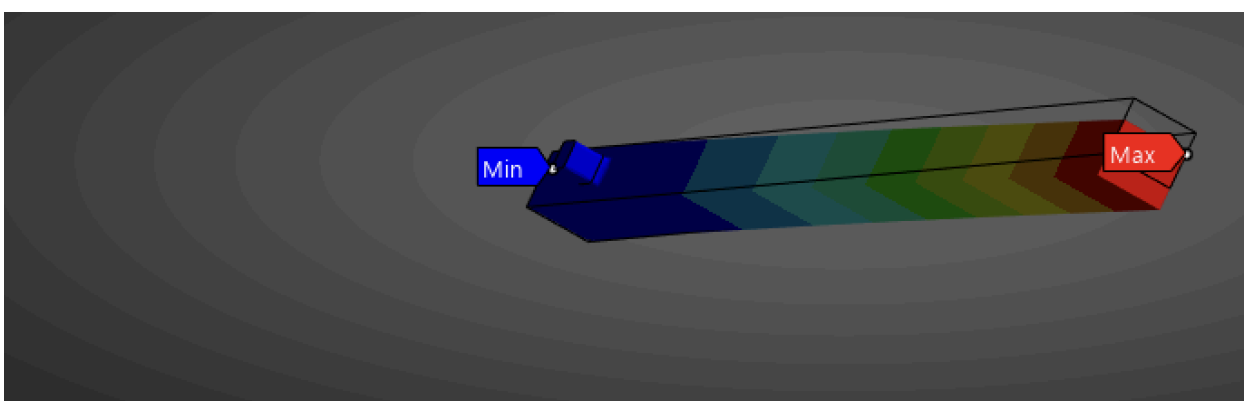

Normal Elastic Strain:

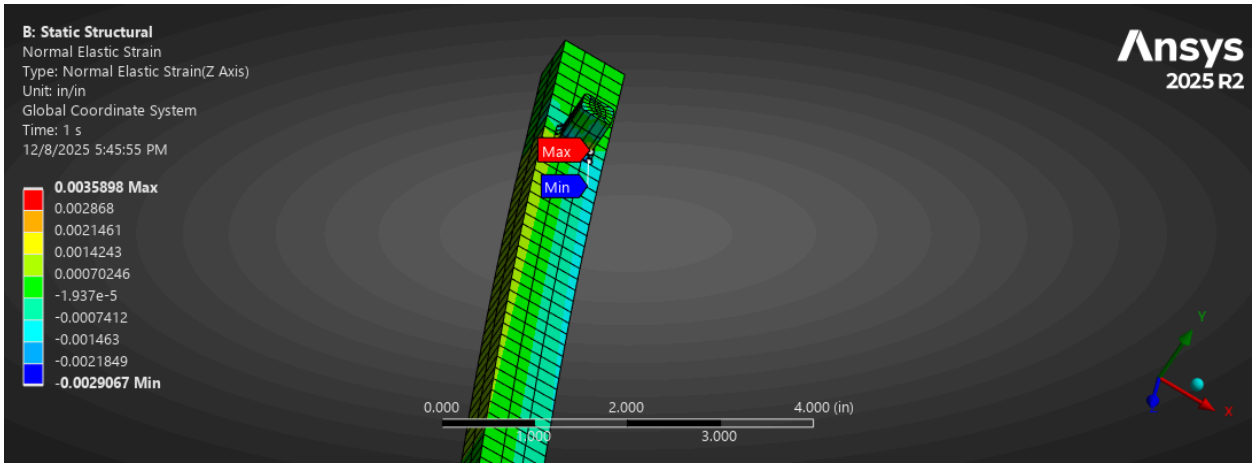

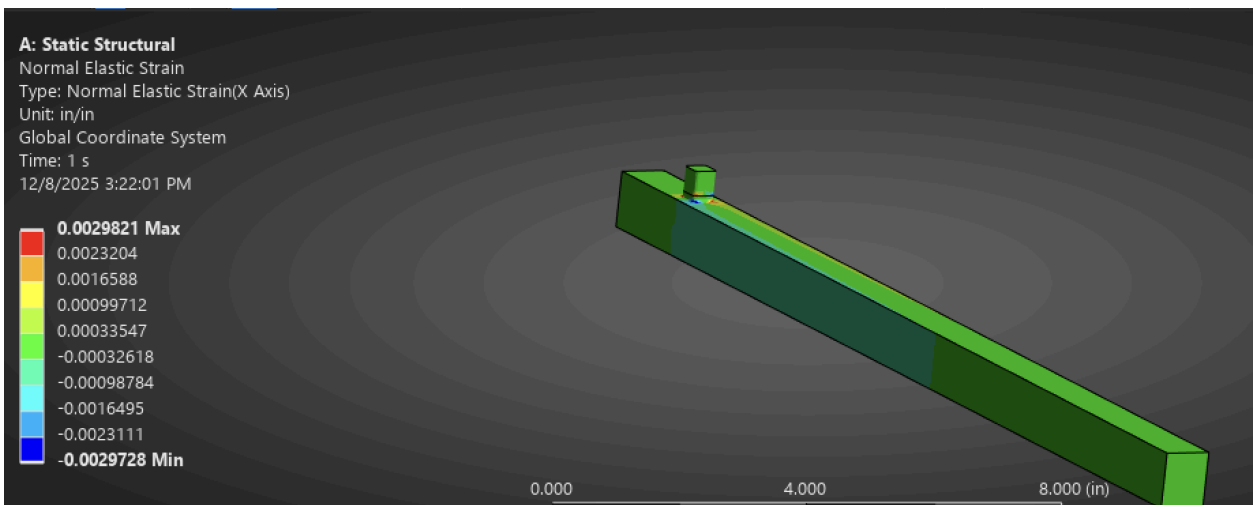

Strain probe:

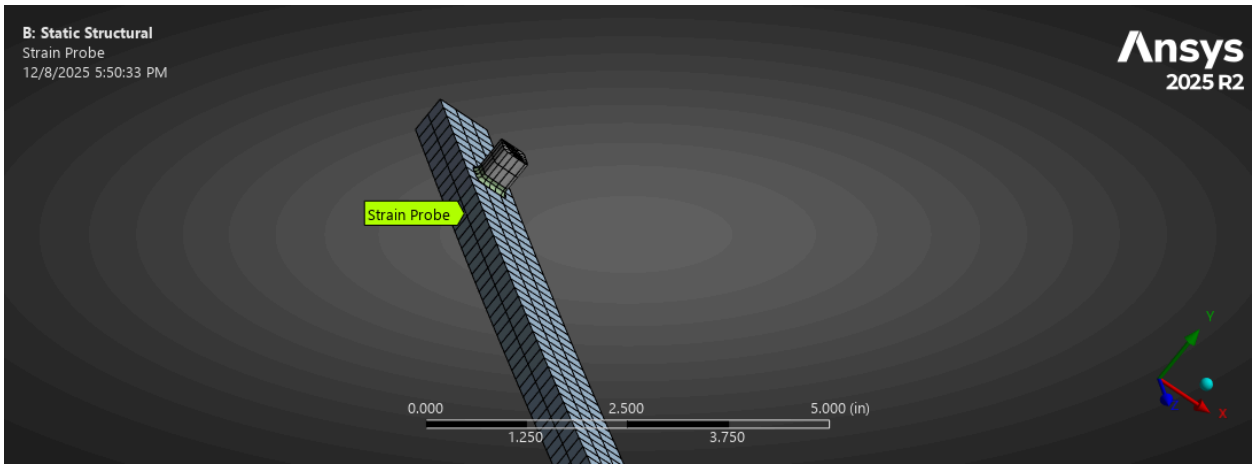

Results	
Maximum Value Over Time	
Normal - X Axis	-3.4491e-004 in/in
Normal - Y Axis	-3.4573e-004 in/in
Normal - Z Axis	1.1527e-003 in/in
XY Shear	-7.8714e-007 in/in
YZ Shear	5.0199e-007 in/in
XZ Shear	3.557e-006 in/in
Equivalent (von-Mises)	1.1523e-003 in/in
Maximum Principal	1.1527e-003 in/in
Middle Principal	-3.4475e-004 in/in
Minimum Principal	-3.4589e-004 in/in

We see that the value for strain at the probe is 1152.7 microstrain, which is very close to the number we got from the hand calculations.

Maximum principal stress:

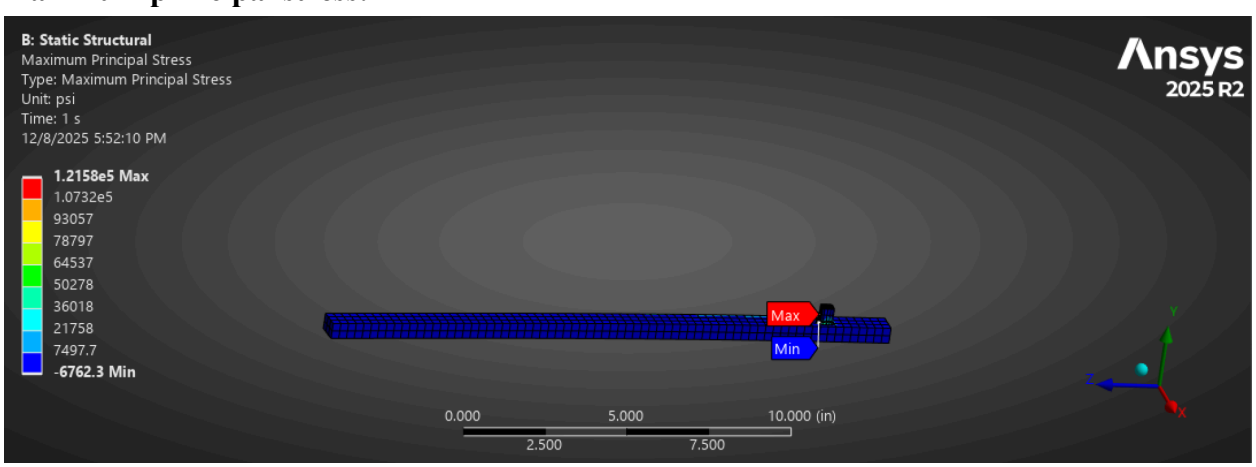

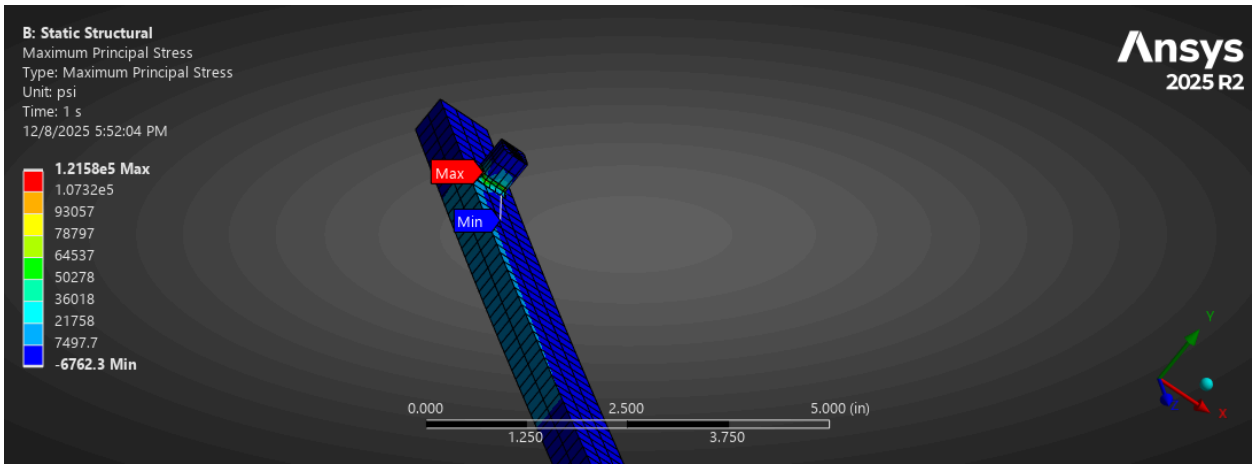

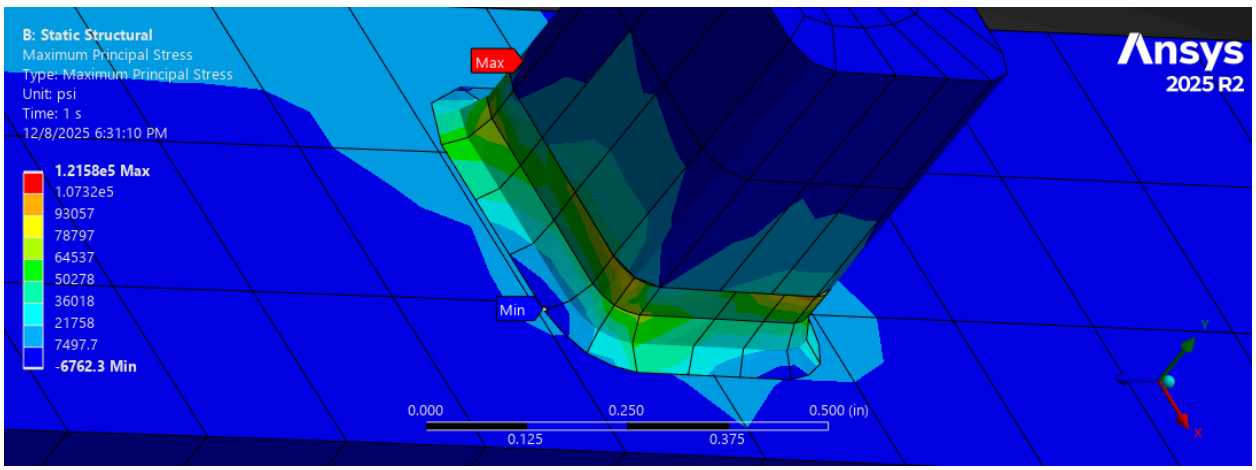

Normal stress:

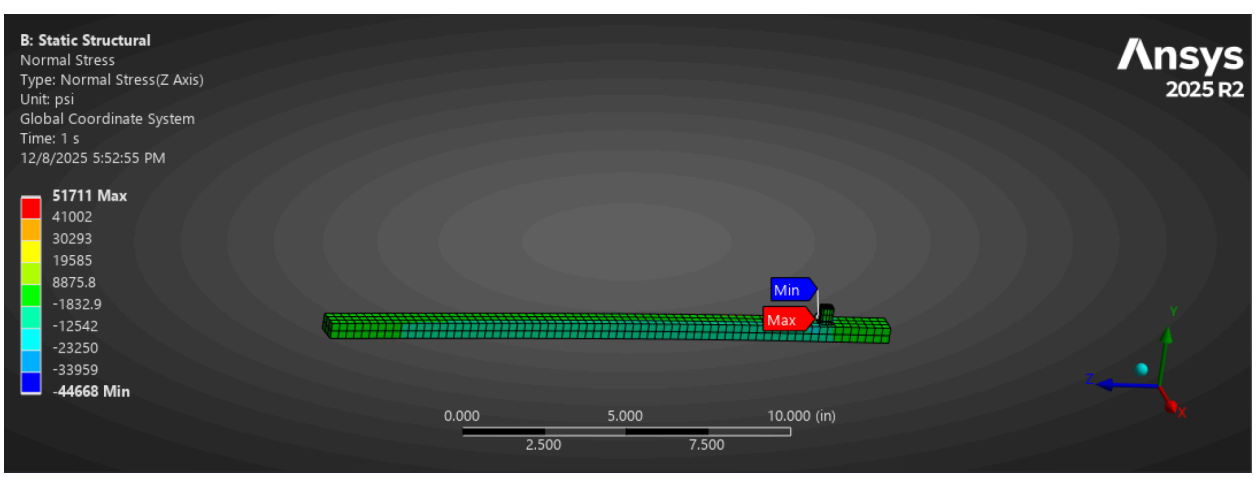

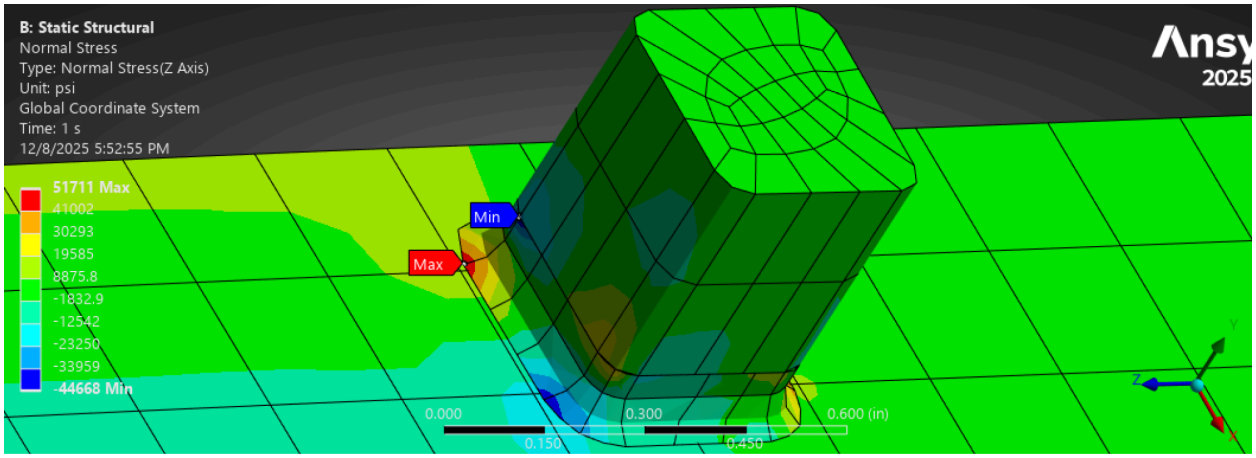

Our Design Reflections:

1. In the deformation images the mesh lines that cut across the handle (i.e., lines that were originally straight cross-sections) stay essentially straight after deformation. They might tilt, but they do not curve or warp noticeable. That means cross-sections are still behaving like rigid planes, which is exactly the beam assumption.
   Because of this, beam theory is a reasonable model for the handle and drive, and we should expect hand beam calculations to give a good first approximation of the stresses and deflections.
2. The FEM model predicts a maximum normal stress of approximately 51.7 ksi, while the hand calculation predicts only 12.8 ksi. This is a large difference. The reason is that the hand calculation uses simple beam theory, which assumes a uniform cross-section and pure bending. In contrast, the FEM model includes the true 3D geometry and loading conditions. The load in ANSYS is applied over a very small region, which creates a localized stress concentration that beam theory cannot capture. Fillets, contact effects, and shear deformation also contribute to the higher stress in the FEM result. There is also an issue because there are 2 separate bodies, so between the first and the second body there is a gap, which makes the stress increase.
3. The hand calculation predicts a tip deflection of 0.28 in, while the FEM model gives a larger displacement of about 0.39 in. This difference comes from beam theory assuming idealized conditions: uniform geometry, no shear deformation, and a perfectly rigid support. The FEM model includes fillets, variations in stiffness, and 3D deformation effects, all of which increase the overall flexibility of the structure. As a result, the FEM displacement is higher and more representative of the real physical behavior.