Team Lighthouse
Members: Andy Chen, Jacob Kupperman, Allison Newman, Olivia Tigner, Marcus Pang

SLF Lure Functional Prototype

Documentation

Components Brought from McMaster

McMaster Total Budget Use: $92.58

Item #	Part Description	McMaster Code	Quantity	Unit of measurement	Total Cost	Manufacturing
1	DC Equipment Cooling Fan	8774N26	3	1.97" Square Hole, .39" Deep	$14.49	N/A
2	Cinching Strap with Squeeze-Release Buckle, Nylon, Black, 4ft Long	29695T991	2	1" Wide	$11.14	N/A
3	Quick-Tight Tie Down Strap, 3ft Long	8834T651	1	2" Wide	$15.20	Unused due to determining Item #2 works better
4	PTFE Shim Stock	1192N11	3	8"x12" Sheet, 0.001" Thick	$11.01	Unused due to flimsiness
5	D-Profile Rotary Shaft, 1045 Carbon Steel	8632T139	1	12" Long, 1/4" Diameter	$10.86	
6	Ultra-Low-Friction UHMW Polyethylene Bars, 1/4", 3ft long	8701K37	1	1/4" Diameter	$4.68	
7	Plastic Hinges without Holes, Clear Acrylic Plastic	11185A141	10	1/2" x 11/16" Door Leaf	$8.80	
8	Clamping Shaft Collar for 1/4" Diameter, 303 Stainless Steel	6435K32	2	1/4" Diameter	$16.40	
9	M4 15mm Long Screw + Nut	(From the Lab)	4			
10	M3 15mm Screw	(From the Lab)	4			

- We will be sawing the Ultra-Low-Friction UHMW Polyethylene Bars into multiple pieces (length = 6 inches) for the Anemometer
- We will be manufacturing the container, lid and anemometer on our own using the RPL 3D printers

3/27 - Photo Documentation

Cup Anemometer x 4

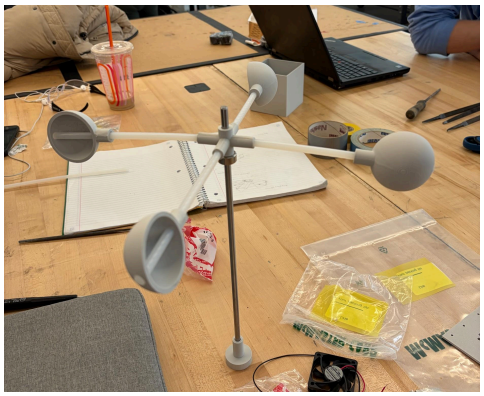

Cup Anemometer + D-Shaft + Fan to Shaft Connector Piece

Final Look at the end of 3/27 - Includes some next iteration ideas

Sketches & CAD

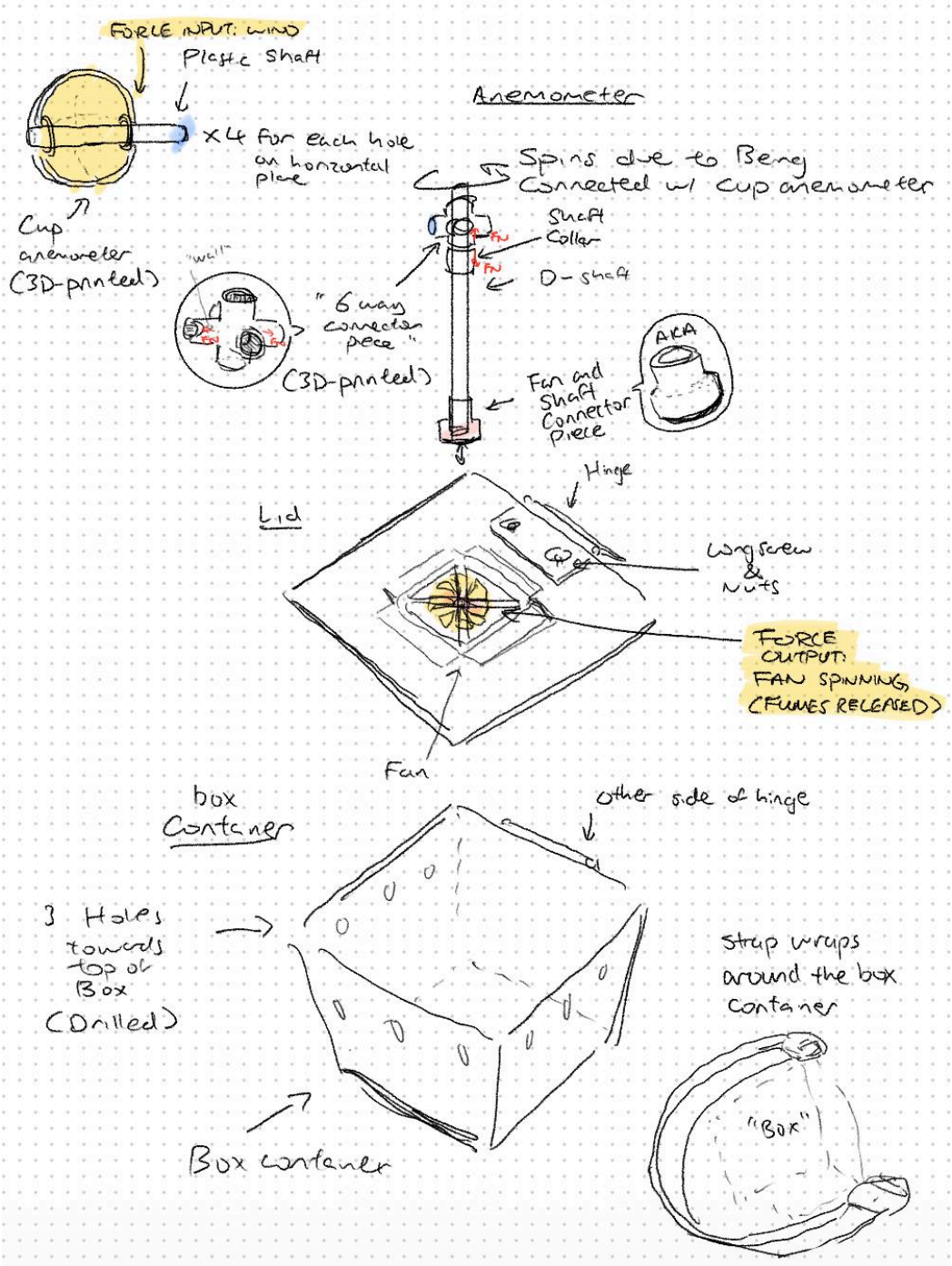

Overall Sketch of the final design

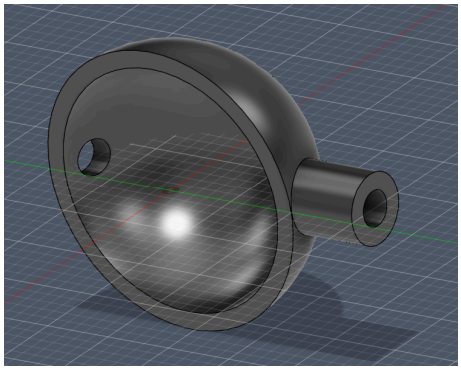

Anemometer cup, 3D print 4x

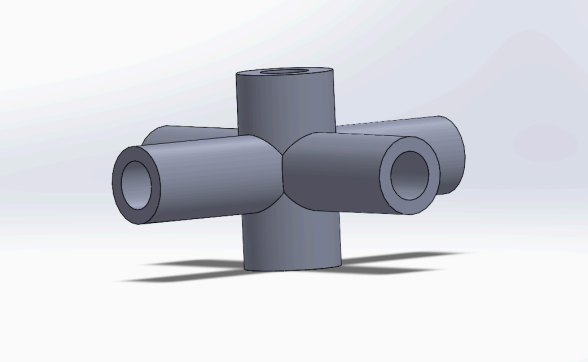

6 Way Connector Piece

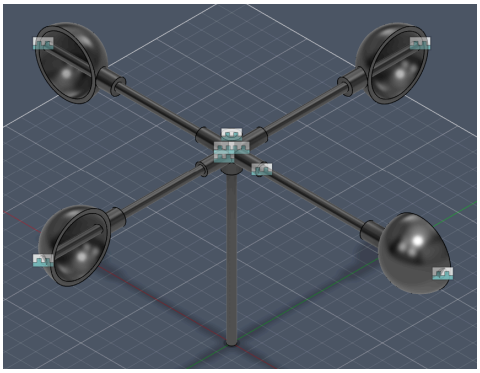

Cup Anemometers attached to plastic shaft on the 6 Way Connector Piece

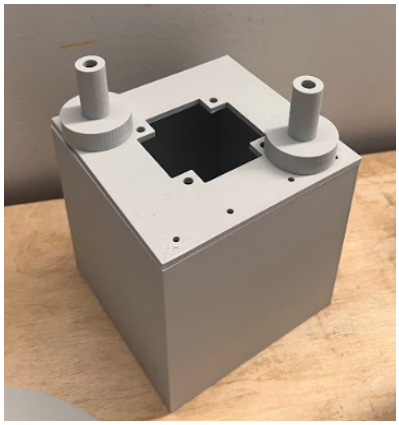

Box with holes for hinges and fan and the Shaft to Fan Connectors

Assembling Prototype

1) Slide and attach the shaft collar onto the metal D-Shaft under where the 6 way connector piece should go

2) Super glue the fan's circular disk component to the fan to shaft connector piece so that they are centered

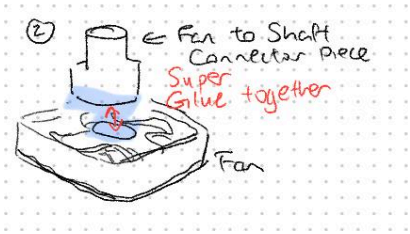

3) Screw the glued together components to the lid with M4 14mm long screws and nuts

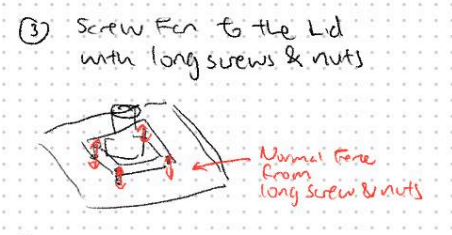

4) Attach the lid to the container with 2 hinges with M3 15mm screws

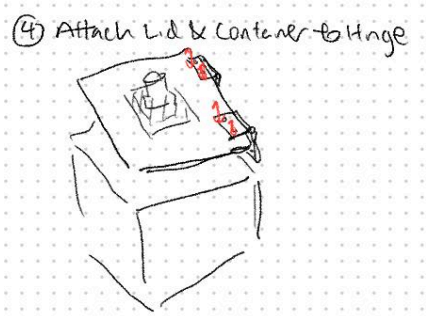

5) Attach the D-Shaft's other end into the connector piece between the shaft and the fan (now attached to the container)

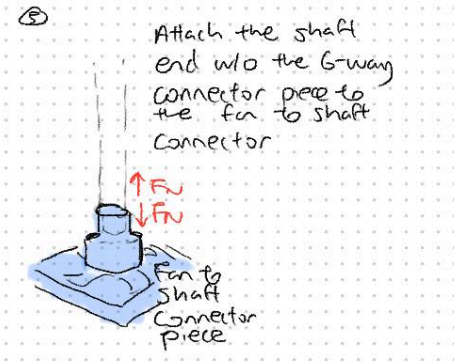

6) Slide the Cup anemometer onto the plastic shafts

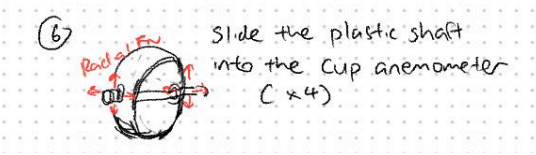

7) Insert the 4 cup anemometers with the plastic shafts into the horizontal holes of the 6 way connector piece in the orientation shown below (top view)

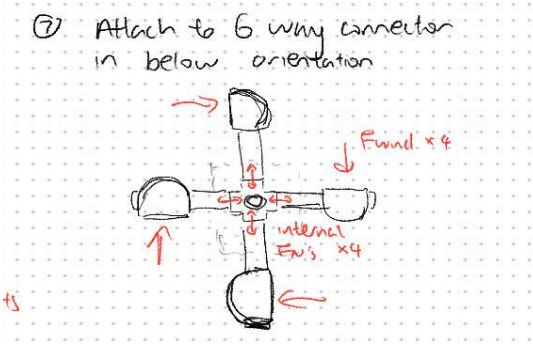

8) Strap the box to the tree branch with 2 buckles (Item #2) in orientation of the photo below

Design Test & Success Criteria

Design Test: for each test, indicate which part it is testing, what it is testing for, how you perform the test, the test results, and what your conclusion is for the next iteration

1. **Stability of Anemometer Assembly (6 way connector + Cup Anemometers) according to Height to windpower ratio**

   Aka ***Height of Anemometer vs Produced Wind Speed***

   We slid our anemometer to different heights on our main shaft, then, using a digital air speed meter, we measured the airflow beneath the attached fan to see how quickly air would be blown into the box by our mechanism. All tests were performed by powering the anemometer with a DC fan that was measured to blow ~5mph wind, held about 6in away from the anemometer's closest cup.

   Results:

Constant Applied Wind Speed: 5.1 mph

Height (in)	Trial 1 (mph)	Trial 2 (mph)	Trial 3 (mph)	Stability
4	0.6	0.7	0.7	Most Stable
6	0.6	0.6	0.7	More Stable
10 (Original)	0.6	0.6	0.6	Pretty Shaky

   Iteration for next prototype:

   We will lower the anemometer mechanism assembly and shorten the main D-Shaft to cut down on the weight, and increase stability by lowering the system's center of mass to the container. Our current assembly and test design isn't quite sensitive enough to show a clear improvement (baseline measurement of our air speed meter is 0.6, and only measures in one decimal increments), but we observed the anemometer to spin much quicker at lower heights (maybe just not enough to change the anemometer by much)

   Also perhaps switching to a plastic shaft to hold the anemometer instead of metal, as the extra weight is likely preventing the wind from powering our mechanism as efficiently.

2. **Applied Wind Speed vs Produced**

   Using a digital air speed meter, we measured the airflow beneath the attached fan to see how quickly air would be blown into the box by our mechanism. All tests were performed powering the anemometer with a DC fan at different voltages (We changed the number of batteries in the circuit), held about 6in away from the anemometer's closest cup.

   Results:

Applied Wind Speed (mph)	Produced Wind Speed (mph)	Efficiency
5.1	0.7	.14
3.1	0.6	.19
4.0	0.6	.15

4.6	0.7	.15
3.8	0.6	.16
4.4	0.7	.16

Iteration for next prototype:

Add a gear ratio into the anemometer/fan linkage so the energy produced by the anemometer is amplified instead of having it directly spin the fan, since our efficiency is fairly low at the moment. Again, our test system is not quite sensitive enough to capture much difference between tests, so hopefully we will be able to capture more of a difference with higher wind speeds produced.

3. **Testing efficiency of the anemometer and our diffuser mechanism**
   ***** For Future Use and will reference once we get a more accurate way of measuring the amount of air or the change in speed etc***

   The test will hopefully give us an idea of how efficient our mechanism is. We will blow a controlled amount of air at the anemometer, and measure the airflow at each hole to get total volumetric flow rate $Q_{total} = A_h \sum_{i=1}^{12} v_i$

   (Possible : calculate $\eta_{flow} = \frac{Q_{out}}{A_{fan} v_{fan}}$ to compare air speed near the fan and resulting flow through holes to get an “efficiency value”)

Success Criteria:

Our prototype converts wind into directed airflow using an anemometer-driven fan. The final design will be considered successful if it meets the following:

- Airflow Efficiency
  - The system should reach at least 0.25 efficiency, ratio of output airflow to input airflow, measured with sensors at the fan or box ventilation holes (We will use anemometer sensors to test this)
  - Test what gear ratio (2:1, 3:1, 4:1) can provide the must airflow
- Mechanical Stability
  - The anemometer should spin without wobbling
  - No parts should loosen after ~20 rotations
  - Calculate expected efficiency and compare it to our data to see if stability may be hindering our mechanisms capabilities *(In formula above or modified based on future iterations)*

Absence Reflection (Marcus):

To compensate for the absence I was tasked with the design tests and success criteria. I did research on possible ways to quantify and measure different aspects of our prototype, and how we can improve on the prototype.