1. (40 pt) Consider an electric water heater operated under a steady state. This water heater is a cylinder with radius $R = 0.5$ m and height $H = 1$ m. When the water heater is fully filled, the water temperature inside can be maintained at 50 °C. The wall of the water heater is thin enough and of high thermal conductivity, so we can assume that the exterior wall temperature of the water heater T_s is also 50 °C at the steady state. The water heater is placed in an environment with ambient temperature of $T_\infty = 20$ °C and heat transfer coefficient of $h = 15$ W/(m²·K). The bottom of the water heater is well thermally insulated. Thermal radiation is negligible in this problem.

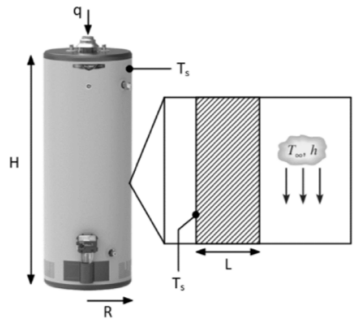

(a) Calculate the total electrical heating power q needed to maintain a constant water temperature at 50 °C.

(b) To reduce the heat loss from the water heater, we now attach a $L = 2$ cm thick thermal insulation foam to the exterior wall of the water heater, including both side wall and top wall (zoom-in illustration). Thermal conductivity k of the insulation foam is 0.1 W/(m·K). Since the thickness of the insulation foam is much smaller than the radius of the water heater, we can assume 1D heat conduction across the insulation foam. To maintain a constant water temperature at 50 °C, now how much total electrical heating power q is needed?

(c) Compare the results obtained from (a) and (b), discuss the role of thermal insulation in the energy saving of water heater.

Known

$R = 0.5$ m
$H = 1$ m
$T_{in} = 50$ °C
$T_\infty = 20$ °C
$h = 15 \frac{W}{m^2 K}$
$L = 2$ cm
$k = 0.1 \frac{W}{mK}$

Find

a) q_{conv}
b) q_{cond}.

Schematic

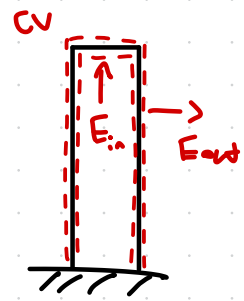

Properties

N/A

Assumptions

- Bottom is perfectly insulated
- steady state
- Thin wall
- constant, distributed q internal
- 1D Heat conduction
- Ignore radiation

Analysis

a) choose CV to be the surface of the tank. steady state so: $\dot{E}_{in} = \dot{E}_{out}$
The heat rate of $\dot{E}_{out}$ can be given by Newton's law of cooling:
$q = hA(T_s - T_\infty)$
Plugging in we can solve for q required:

$$q = (15 \tfrac{W}{m^2 K})(\pi(0.5m)^2 + 2\pi(0.5m)(1m))(50°C - 20°C) \qquad A = 3.927 m^2$$

$$\boxed{q = 1767.15 \text{ W}}$$

b) Now, the system can be described by fourier's law as well due to the 1D conduction assumption. conduction is in series with convection.
$\dot{E}_{in} = \dot{E}_{out}$ still, so:

$$q_{conv} = hA(T_2 - T_\infty) = (15)(3.927)\left(\frac{50° - T_2 °C}{0.2m}\right)$$

$$q_{cond} = k\frac{T_1 - T_2}{L} = \left[\frac{50° - T_2 °C}{0.02m}\right](0.1 \tfrac{W}{mK})$$

set HAM equal to each other:

$$(15)(3.927)\left(\frac{50^\circ - T_2^\circ C}{0.2m}\right) = \left[\frac{50^\circ - T_2^\circ C}{0.02m}\right]\left(0.1\frac{W}{mK}\right)$$

solve for T_2:

$T_2 = 27.5^\circ C$

plug back in to get heat rate

$q = \left(15\frac{W}{mK}\right)(3.927m^2)(T_2 - 20^\circ C)$

$$\boxed{q = 441.8\,W}$$

c) The heat rate with insulation is $\frac{1}{3}$ the heat rate without it. It is beneficial for water heaters to efficiently heat water and maintain it at a given temperature, therefore insulation is very important as fewer energy is lost to the environment with it as compared to without it.