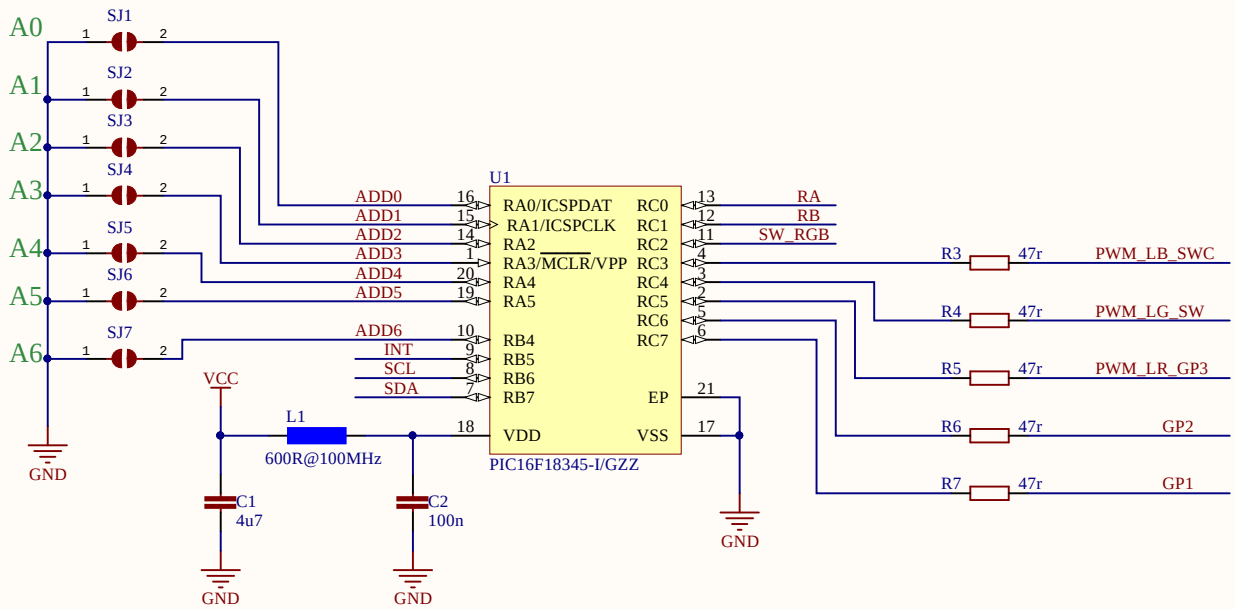

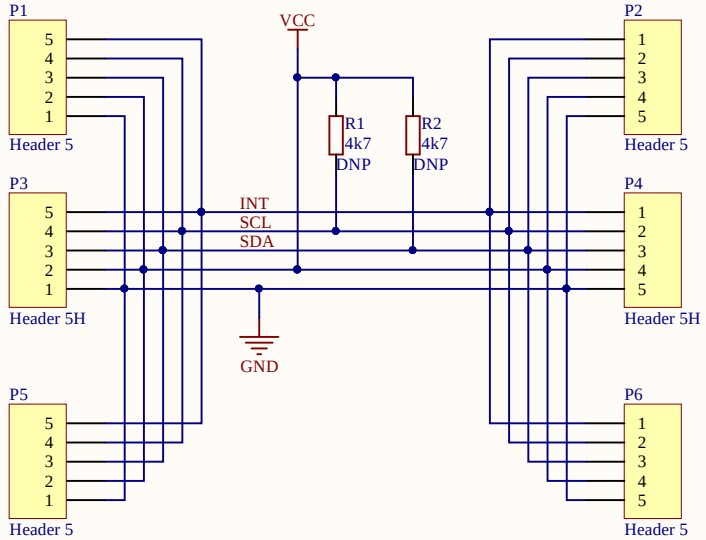

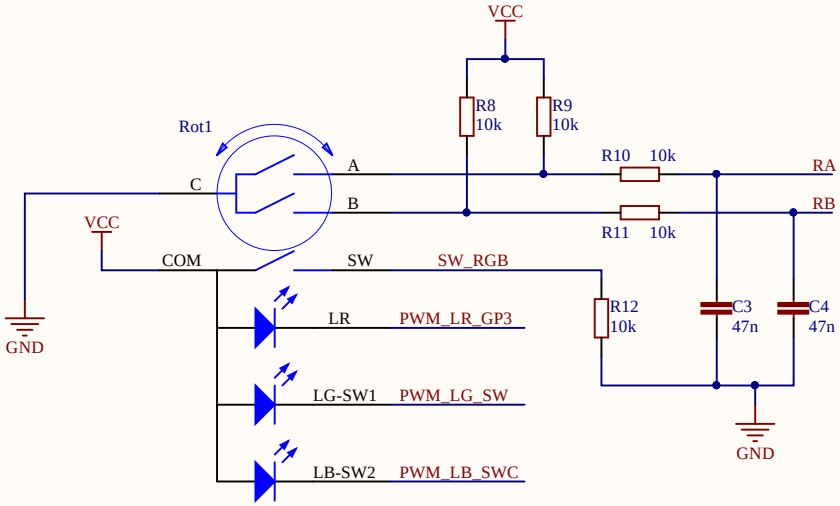

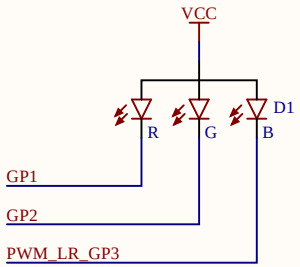

Title *I2C Encoder v2*			Author: Simone C.
Size: A4	Number:0003	Revision:1.1	CheckedBy: Simone C.
Date: 07/05/2018		Sheet 1 of 1	ApprovedBy: Atika W.

DuPPa

INT SCL SDA + -
0.2 V
R1
R2
- + ADS SCL SDA INT
- + SDA SCL INT
C1
L1
C2
R5
R6
R7
R4
R3
U1
R12
R10
R9
R8
R11
C3
C4
D0
D7

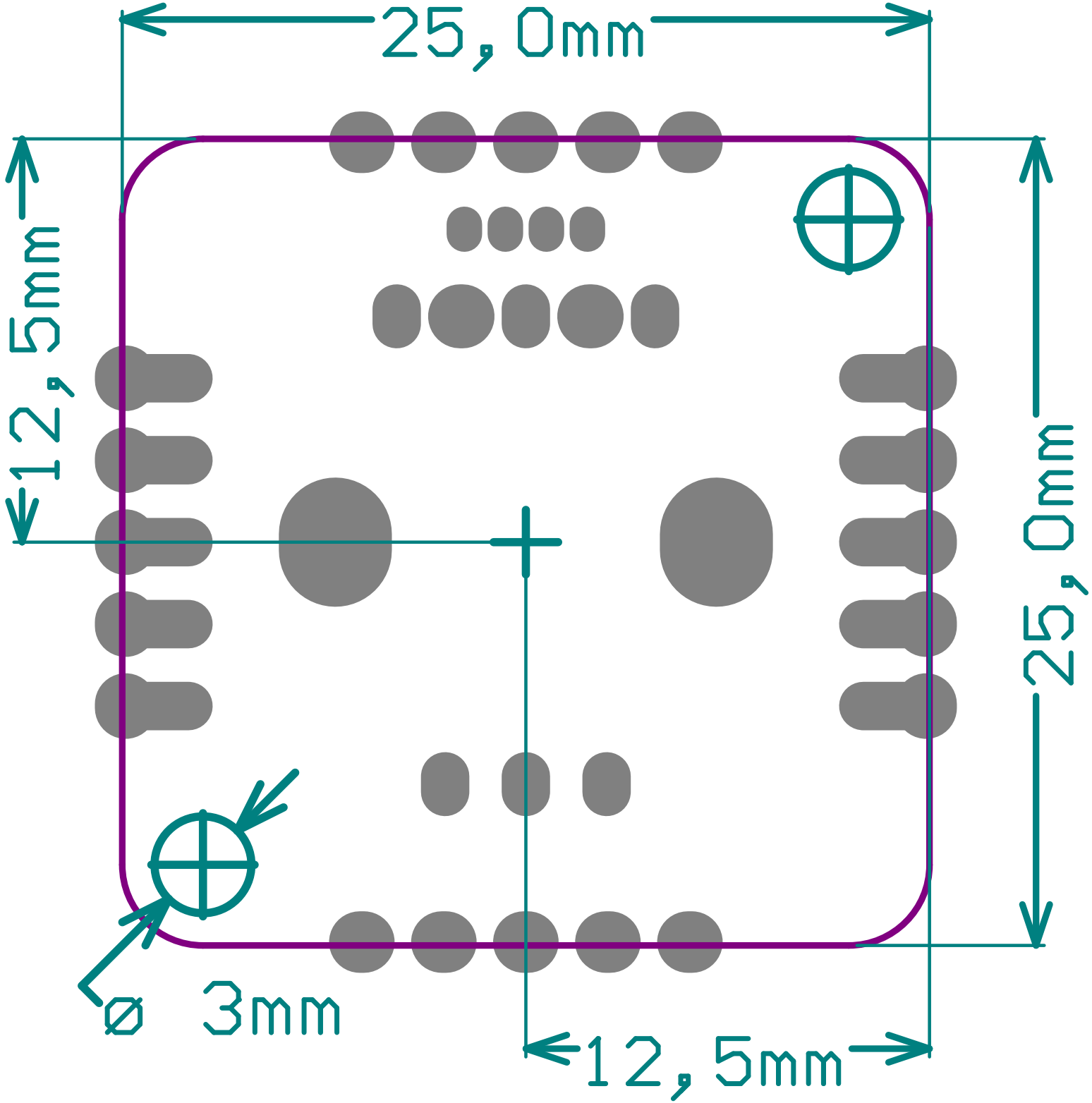
25,0mm
12,5mm
25,0mm
Ø 3mm
12,5mm