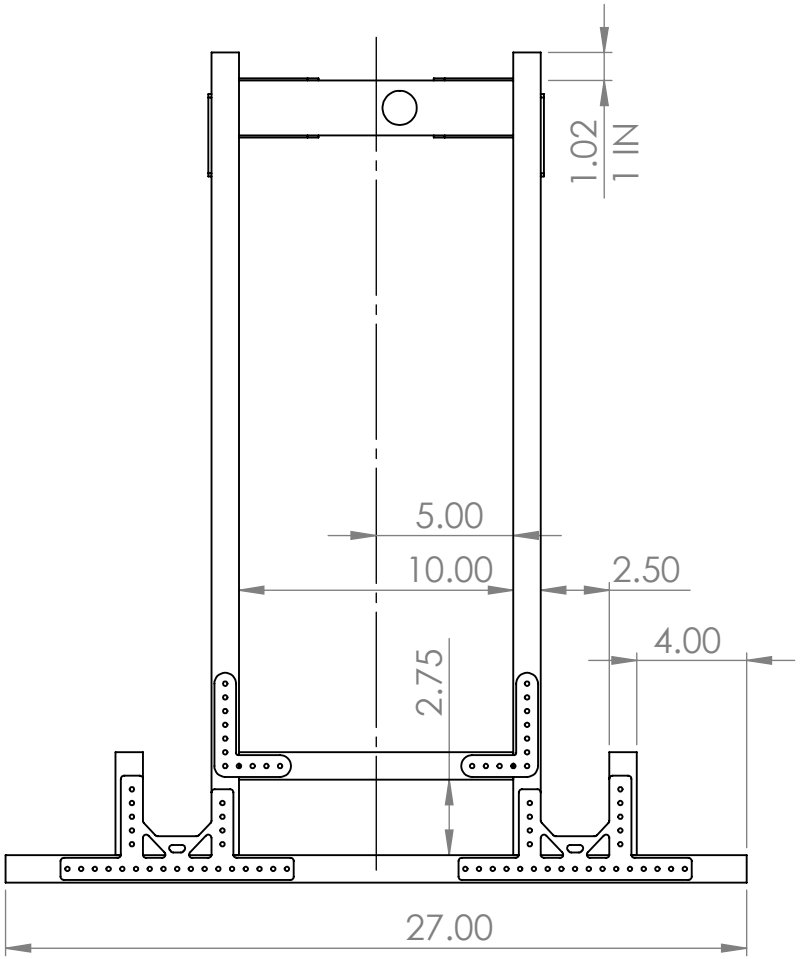

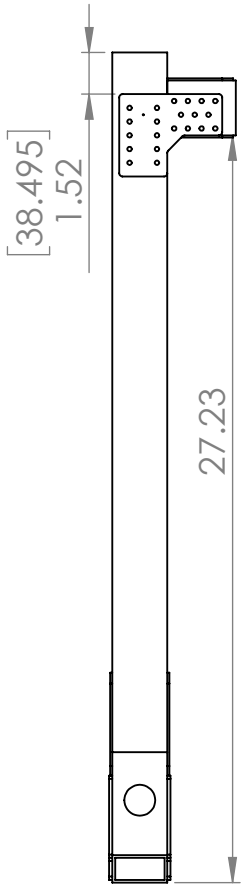

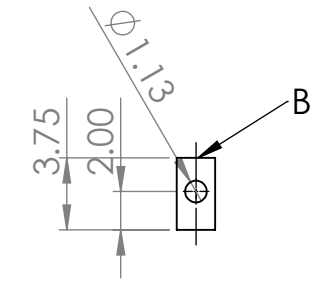

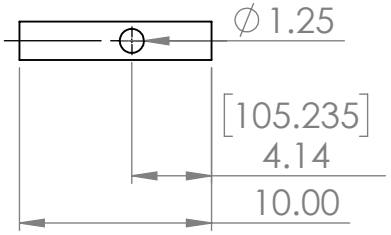

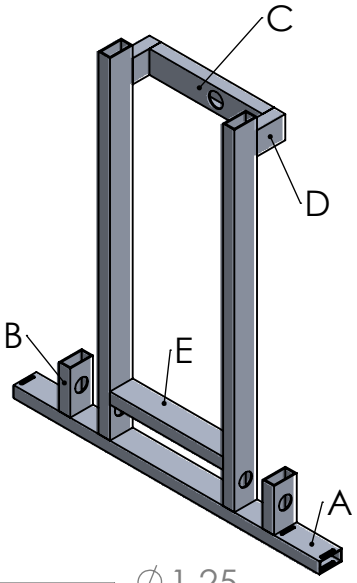

UNLESS OTHERWISE SPECIFIED: DIMENSIONS ARE IN MILLIMETERS SURFACE FINISH: TOLERANCES: LINEAR: ANGULAR:		FINISH:			DEBURR AND BREAK SHARP EDGES	DO NOT SCALE DRAWING / REVISION
						DAEDALUS 7102 - RAPID REACT
	NAME	SIGNATURE	DATE			TITLE: ELEVADOR - ETAPA ESTÁTICA UNIDADES - IMPERIAL CC. JOHN CORRADO
DRAWN						
CHK'D						
APPV'D						
MFG						
Q.A				MATERIAL:		DWG NO. BASE ASSY DWG — A4
				WEIGHT:		SCALE:1:10 — SHEET 1 OF 1

SOLIDWORKS Educational Product. For Instructional Use Only.