JOHNSON

喬山健身器材(上海)有限公司
樣 品 承 認 書

SAMPLE SPECIFICATION FOR APPROVAL

品 名:電晶體;NMOS;AO4264E;AOS;SOIC8;SMD

料 号:1000482065

圖 号: _____ 機 種: MA TRZ X R-1

☐新產品 ☐模具確認 ☐設計變更 ☐其它

廠商	承認章	核 準	校 對	主 辦
	APPROVED	APPROVAL BY	CHECKED BY	PREPARED BY
		Alice	Vic	
喬山公司	資材核準		資材主辦	周琴 2022.11.11
	是否需要測試	☐是 ☐否	測試主辦	
	是否安規認證	☑是 ☐否	認證主辦	苏伟 11/21

承認章	核 準		主 辦
APPROVED	APPROVAL BY		PREPARED BY
業務			
	☐認可 ☐有條件認可 ☐不予以認可		
品保	王海涛 2022.11.21		2022年
	☐認可 ☐有條件認可 ☐不予以認可		
研發			王盼
	☑認可 ☐有條件認可 ☐不予以認可		

廠商名稱 ： 丰艺电子股份有限公司 電話 TEL ： 021-60822688

地 址 ： 上海市嘉定区金沙江西路 1555 弄 10 号 3 楼 傳真 FAX _____

廠商資歷: ☐ISO9001 ☐ISO14001 ☐其他

送樣履歷: ☑首次送樣 ☐二次送樣 ☐三次送樣

吳昭.

CZ-QP-DN0-008-01

ALPHA & OMEGA SEMICONDUCTOR

AO4264E

60V N-Channel AlphaSGT™

General Description

- Trench Power AlphaSGT™ technology
- Low $R_{DS(ON)}$
- Low Gate Charge
- ESD protected

Applications

- High efficiency power supply
- Secondary synchronus rectifier

Product Summary

V_{DS}	60V
I_D (at V_{GS}=10V)	13.5A
$R_{DS(ON)}$ (at V_{GS}=10V)	< 9.8mΩ
$R_{DS(ON)}$ (at V_{GS}=4.5V)	< 13.5mΩ
Typical ESD protection	**HBM Class 2**

100% UIS Tested
100% Rg Tested

Green Product

SOIC-8

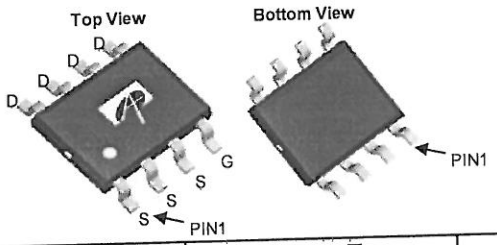

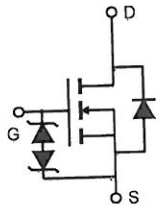

Orderable Part Number	Package Type	Form	Minimum Order Quantity
AO4264E	SO-8	Tape & Reel	3000

Absolute Maximum Ratings T_A=25°C unless otherwise noted

Parameter		Symbol	Maximum	Units
Drain-Source Voltage		V_{DS}	60	V
Gate-Source Voltage		V_{GS}	±20	V
Continuous Drain Current	T_A=25°C	I_D	13.5	A
	T_A=70°C		10.5	
Pulsed Drain Current [C]		I_{DM}	54	
Avalanche Current [C]		I_{AS}	17	A
Avalanche energy	L=0.3mH [C]	E_{AS}	43	mJ
V_{DS} Spike [G]	10µs	V_{SPIKE}	72	V
Power Dissipation [B]	T_A=25°C	P_D	3.1	W
	T_A=70°C		2.0	
Junction and Storage Temperature Range		T_J, T_{STG}	-55 to 150	°C

Thermal Characteristics

Parameter		Symbol	Typ	Max	Units
Maximum Junction-to-Ambient [A]	t ≤ 10s	$R_{\theta JA}$	31	40	°C/W
Maximum Junction-to-Ambient [A D]	Steady-State		59	75	°C/W
Maximum Junction-to-Lead	Steady-State	$R_{\theta JL}$	16	24	°C/W

Electrical Characteristics (T_J=25°C unless otherwise noted)

Symbol	Parameter	Conditions	Min	Typ	Max	Units
STATIC PARAMETERS						
BV_{DSS}	Drain-Source Breakdown Voltage	I_D=250µA, V_{GS}=0V	60			V
I_{DSS}	Zero Gate Voltage Drain Current	V_{DS}=60V, V_{GS}=0V			1	µA
		T_J=55°C			5	
I_{GSS}	Gate-Body leakage current	V_{DS}=0V, V_{GS}=±20V			±10	µA
$V_{GS(th)}$	Gate Threshold Voltage	V_{DS}=V_{GS}, I_D=250µA	1.4	1.8	2.4	V
$R_{DS(ON)}$	Static Drain-Source On-Resistance	V_{GS}=10V, I_D=13.5A		8	9.8	mΩ
		T_J=125°C		12.5	15.0	
		V_{GS}=4.5V, I_D=11.5A		10.5	13.5	mΩ
g_{FS}	Forward Transconductance	V_{DS}=5V, I_D=13.5A		48		S
V_{SD}	Diode Forward Voltage	I_S=1A, V_{GS}=0V		0.72	1	V
I_S	Maximum Body-Diode Continuous Current				4	A
DYNAMIC PARAMETERS						
C_{iss}	Input Capacitance	V_{GS}=0V, V_{DS}=30V, f=1MHz		1100		pF
C_{oss}	Output Capacitance			300		pF
C_{rss}	Reverse Transfer Capacitance			28		pF
R_g	Gate resistance	f=1MHz	0.6	1.2	2.0	Ω
SWITCHING PARAMETERS						
Q_g(10V)	Total Gate Charge	V_{GS}=10V, V_{DS}=30V, I_D=13.5A		14.5	25	nC
Q_g(4.5V)	Total Gate Charge			7	13	nC
Q_{gs}	Gate Source Charge			2.5		nC
Q_{gd}	Gate Drain Charge			3.5		nC
$t_{D(on)}$	Turn-On DelayTime	V_{GS}=10V, V_{DS}=30V, R_L=2.2Ω, R_{GEN}=3Ω		6.5		ns
t_r	Turn-On Rise Time			3.5		ns
$t_{D(off)}$	Turn-Off DelayTime			22		ns
t_f	Turn-Off Fall Time			3		ns
t_{rr}	Body Diode Reverse Recovery Time	I_F=13.5A, di/dt=500A/µs		18.5		ns
Q_{rr}	Body Diode Reverse Recovery Charge	I_F=13.5A, di/dt=500A/µs		59		nC

A. The value of $R_{\theta JA}$ is measured with the device mounted on 1in² FR-4 board with 2oz. Copper, in a still air environment with T_A =25° C. The value in any given application depends on the user's specific board design.
B. The power dissipation P_D is based on $T_{J(MAX)}$=150° C, using ≤ 10s junction-to-ambient thermal resistance.
C. Repetitive rating, pulse width limited by junction temperature $T_{J(MAX)}$=150° C. Ratings are based on low frequency and duty cycles to keep initialT_J=25° C.
D. The $R_{\theta JA}$ is the sum of the thermal impedance from junction to lead $R_{\theta JL}$ and lead to ambient.
E. The static characteristics in Figures 1 to 6 are obtained using <300µs pulses, duty cycle 0.5% max.
F. These curves are based on the junction-to-ambient thermal impedance which is measured with the device mounted on 1in² FR-4 board with 2oz. Copper, assuming a maximum junction temperature of $T_{J(MAX)}$=150° C. The SOA curve provides a single pulse rating.
G. The spike duty cycle 5% max, limited by junction temperature TJ(MAX)=125° C.

APPLICATIONS OR USE AS CRITICAL COMPONENTS IN LIFE SUPPORT DEVICES OR SYSTEMS ARE NOT AUTHORIZED. AOS DOES NOT ASSUME ANY LIABILITY ARISING OUT OF SUCH APPLICATIONS OR USES OF ITS PRODUCTS. AOS RESERVES THE RIGHT TO IMPROVE PRODUCT DESIGN,FUNCTIONS AND RELIABILITY WITHOUT NOTICE.

TYPICAL ELECTRICAL AND THERMAL CHARACTERISTICS

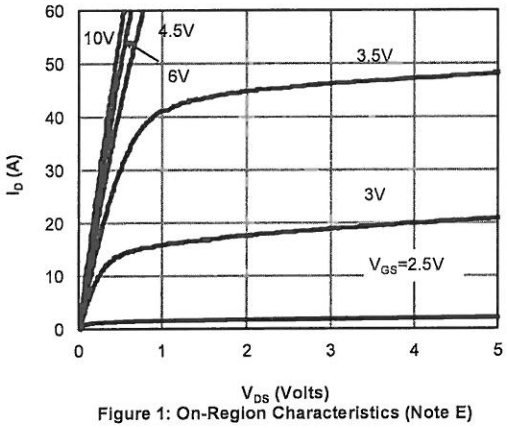

Figure 1: On-Region Characteristics (Note E)

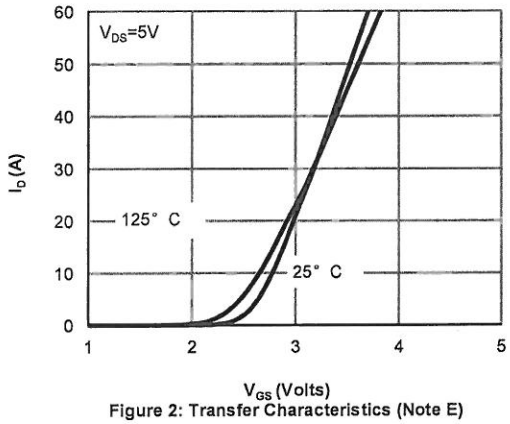

Figure 2: Transfer Characteristics (Note E)

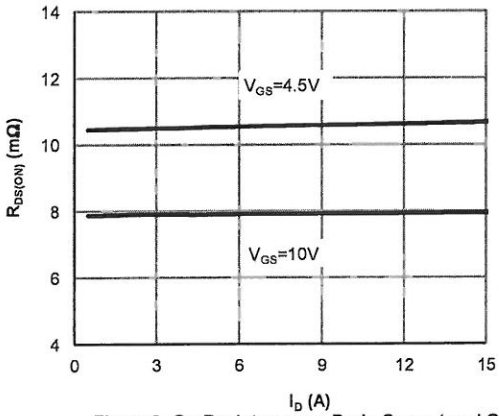

Figure 3: On-Resistance vs. Drain Current and Gate Voltage (Note E)

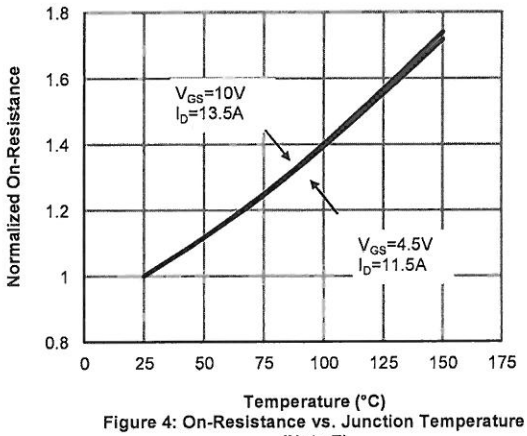

Figure 4: On-Resistance vs. Junction Temperature (Note E)

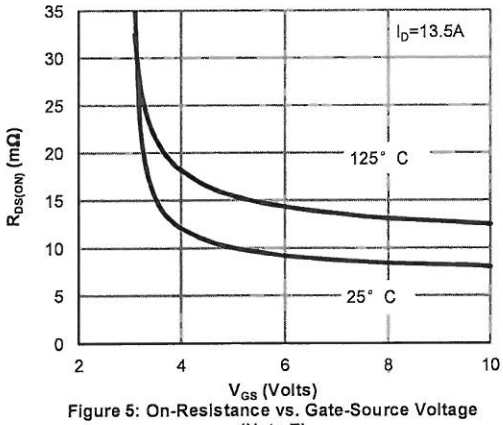

Figure 5: On-Resistance vs. Gate-Source Voltage (Note E)

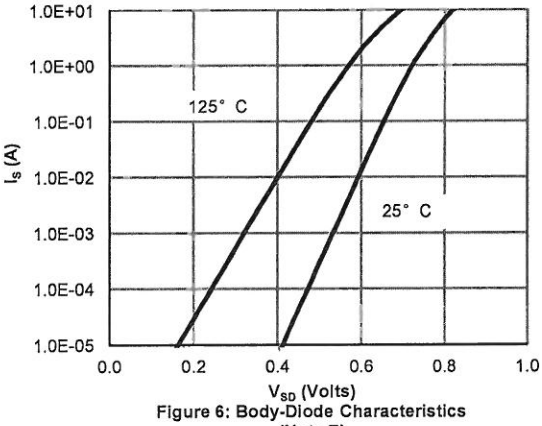

Figure 6: Body-Diode Characteristics (Note E)

TYPICAL ELECTRICAL AND THERMAL CHARACTERISTICS

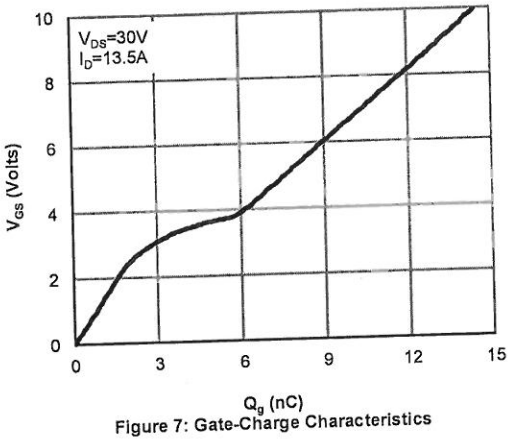

Figure 7: Gate-Charge Characteristics

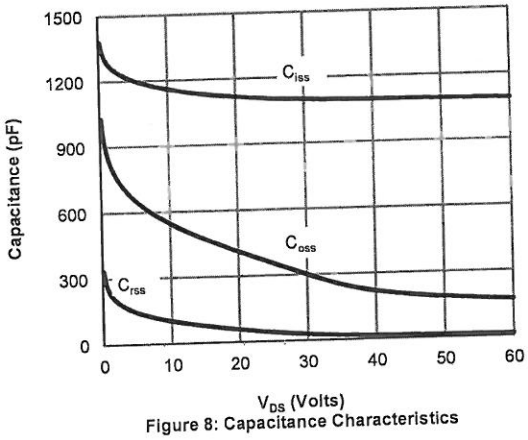

Figure 8: Capacitance Characteristics

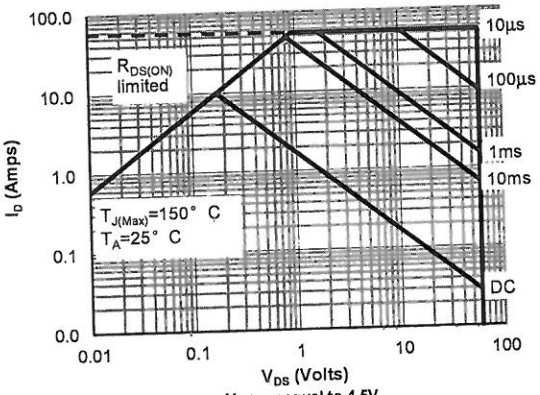

Figure 9: Maximum Forward Biased Safe Operating Area (Note F)

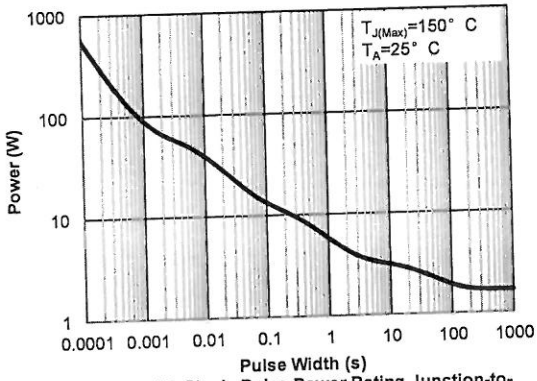

Figure 10: Single Pulse Power Rating Junction-to-Ambient (Note F)

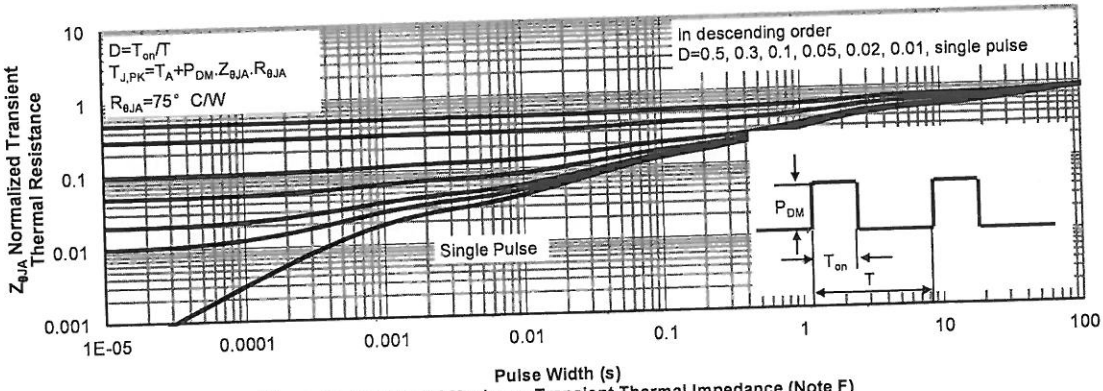

Figure 11: Normalized Maximum Transient Thermal Impedance (Note F)

Figure A: Gate Charge Test Circuit & Waveforms

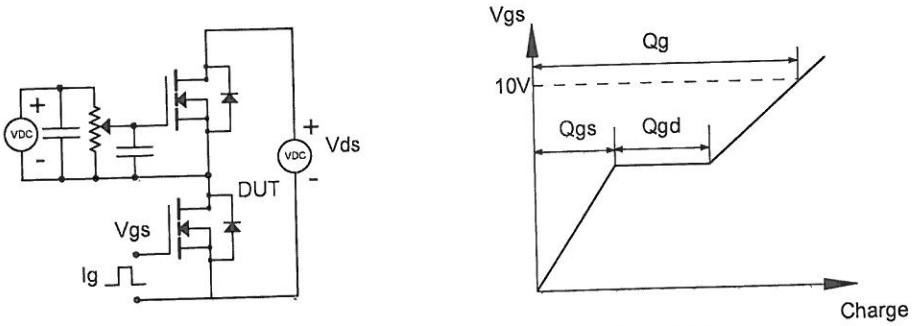

Figure B: Resistive Switching Test Circuit & Waveforms

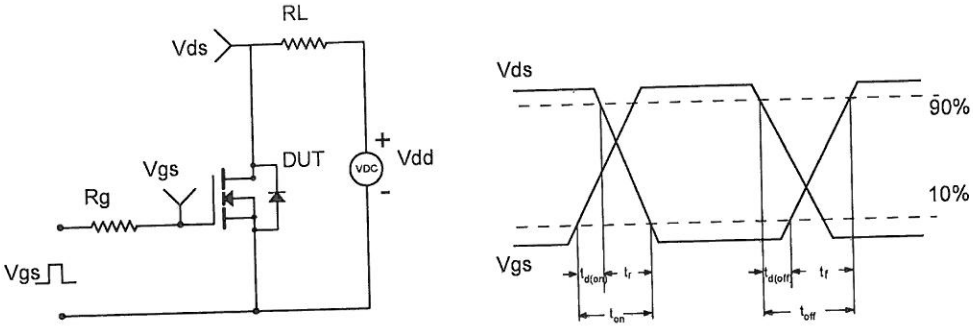

Figure C: Unclamped Inductive Switching (UIS) Test Circuit & Waveforms

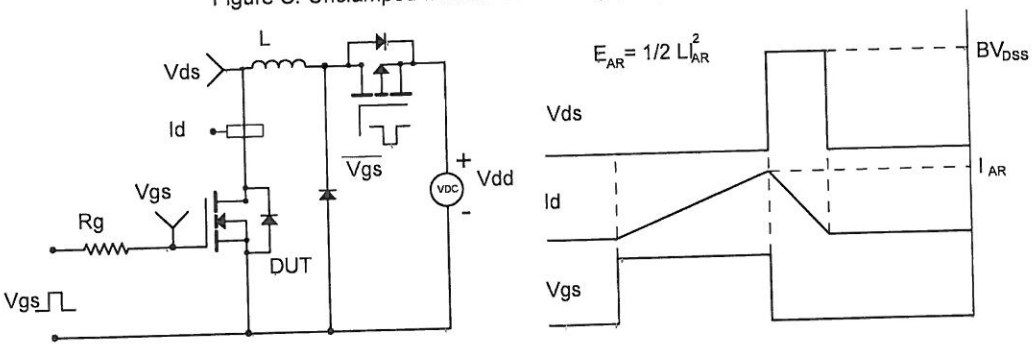
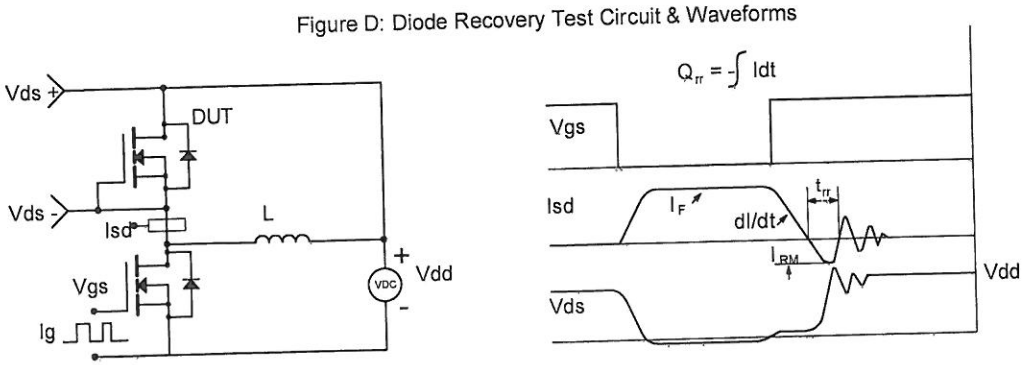
Figure D: Diode Recovery Test Circuit & Waveforms