Desktop XY Plotter Based
Pick and Place and In Circuit Test System

ELE 495 – 2nd Progress Report

8 February 2026

Project Team

Name	**Student No.**	**Role (Lead)**
Gaye Erdoğan	211201080	Testing & Esp32 Firmware
Erkin Coşkun Ruhi	211201074	Raspberry Pi & UI & Esp32 Verification
Arda Cevdet Aslangül	221201054	Mechanical design
Enes Yegin	201201075	PCB

Mentor: Coşku Kasnakoğlu

Contents

Contents 2
Abstract 3
Introduction 3
Project Activities and Technical Progress 3
a) 3
b) 5
c) 5
Voltage Divider for Measurement 6
Budget 7
Realistic Constraints Used in the Project 8
Economy 8
Environment and Climate 8
Sustainability 8
Producibility 8
Ethics 8
User Health 8
User Safety 9
Social and Political Responsibility 9
Engineering and Communication Interface Standards and Protocols 9
Electromagnetic Compatibility (EMC) – EU Directive (89/336/EEC) 9
Other Constraints 9
PROJECT PLAN (WBS and GANNT Chart) 10
Work Package Ownership Summary 11
References 11

Abstract

This project aims to develop a low cost, vision guided pick and place prototype that can identify through hole components (primarily resistors and diodes), pick the requested part from a predefined tray, place it onto a target PCB location, and verify the placement. The system must operate autonomously and execute a repeatable pick place verify workflow under limited budget and laboratory constraints.

To reduce mechanical integration risk and improve repeatability, we repurpose a second-hand 3D printer as the XYZ motion platform and use its existing controller board and built-in endstops for homing and motion execution. A Raspberry Pi performs image acquisition and computer vision to localize components and compute target coordinates, and also hosts a web-based user interface accessible over the school LAN. For gripping, we use a ProsKit MS-B126 vacuum SMD tool by bypassing its battery section and applying external ON/OFF control. Since estimating resistor values from images is not permitted, resistor verification is performed electrically using an ESP32-based voltage divider.

Introduction

Desktop pick and place systems are widely used in electronics manufacturing to automate the repetitive task of placing components onto printed circuit boards, improving speed, consistency, and traceability compared to manual assembly. However, commercial machines are often expensive and complex, which motivates low-cost, modular designs that can be adapted for educational labs and small scale prototyping. This project is important because it combines mechanical automation with embedded control, computer vision and a web-based user interface to execute a placement job with minimal manual support. The expected outcomes include a functional prototype that can place 2512 resistors and diodes, verify placement accuracy after placement, report results to the operator, and provide a documented, extendable platform that could be expanded to more component types, improved calibration, higher accuracy, and richer in circuit testing in future iterations.

Project Activities and Technical Progress

a)

Figure 1 presents the overall system architecture. The prototype is organized into four functional blocks: (i) vision and user interface on a Raspberry Pi, (ii) motion execution on the 3D printer controller board, (iii) electrical testing on an ESP32, and (iv) the gripper subsystem based on the ProsKit MS-B126 vacuum tool. The Raspberry Pi receives the user's component request via a web interface, captures images, detects and localizes the selected component, and converts image coordinates into machine coordinates through calibration. The computed pick and place coordinates are then transmitted to the motion controller, which executes the XYZ movements and performs homing using the integrated endstops.

Figure 2 summarizes the executionextern algorithm as a closed-loop sequence: Pick → Place → Verify → Test. During the Pick step, the robot moves to the computed component location and activates the vacuum tool to grasp the part. In the Place step, the robot moves to the target PCB

coordinates and releases the component by turning the vacuum off. In the Verify step, the camera captures a post-placement image to confirm that the component is placed at the correct position and orientation. Finally, in the Test step, the system performs electrical verification when required. For resistors, the ESP32 measures the divider node voltage using its ADC and computes the unknown resistance using the voltage divider relationship $V_{out} = V_{in} \cdot \frac{R_1}{R_T+R_1}$, rearranged to $R_T = R_1(\frac{V_{in}}{V_{out}} - 1)$. This ensures compliance with the constraint that resistor values must not be determined by image processing.

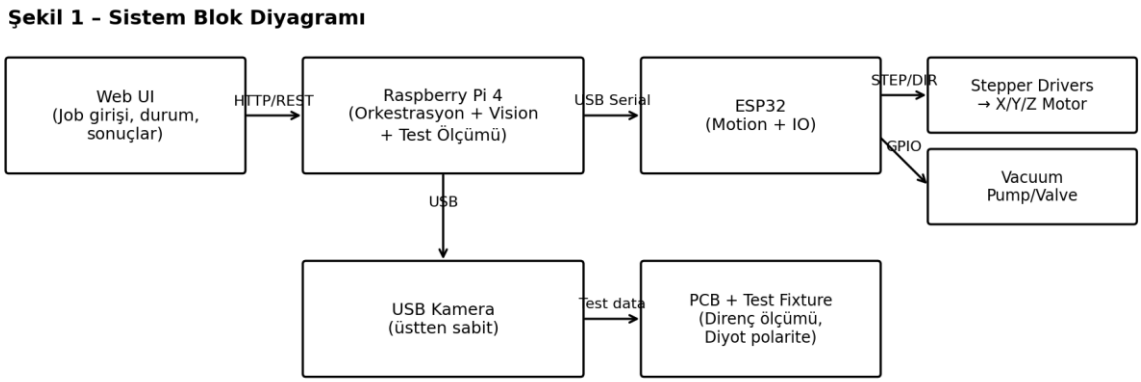

Figure 1: System Block Diagram

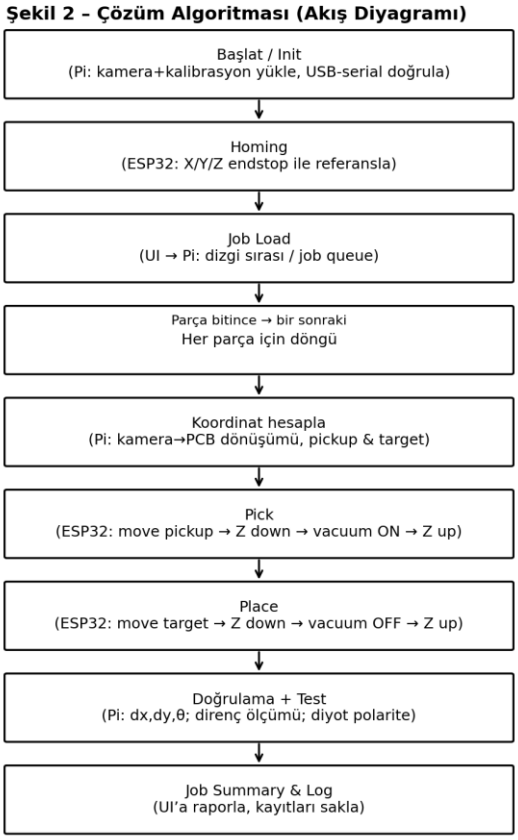

Figure 2: Flow Chart

b)

Since the previous report, we have made significant progress, particularly in the computer vision and image processing part of the project. We advanced from an initial object detection prototype (originally developed for detecting simple targets) to a more functional vision pipeline capable of estimating component coordinates and height related information required for pick and place operations. In parallel, we started the development of the web based user interface; however, this part is still in progress and has not yet been finalized. On the mechanical side, our main frame has been successfully assembled and provides reliable motion along the X and Y axes. For the testing platform, we completed the schematic design of the PCB that will be used for measurement and verification. Our current focus is on integrating the Z axis motion, finalizing the electrical test measurement methods and implementing the vacuum pickup subsystem.

c)

Since the last project plan, we introduced several design changes to reduce integration risk and ensure we can meet the demo requirements with higher reliability. Our initial approach was to build the XYZ motion platform from scratch using NEMA stepper motors**,** belts, and aluminum profiles, and to use a mini vacuum pump as the gripper. However, during implementation we recognized that the custom mechanical build would consume a disproportionate amount of time

(alignment, belt tensioning, driver tuning, endstop integration, and repeatability calibration), creating schedule risk for the core objective.

To tackle this, we switched to a second hand 3D printer and now use its existing mainboard to drive XYZ motion. This gives us a mature motion control stack (step generation, acceleration profiles, homing logic) and already-integrated endstop mechanisms, improving repeatability and reducing debugging effort. This change directly supports the project constraint that the robot must perform motion tasks autonomously using motors and sensors,endstops.

We also revised the gripping subsystem: instead of a vacuum pump, we selected the ProsKit MS-B126 battery-powered vacuum SMD holder. The motivation was to simplify mechanical integration while keeping reliable pick up performance for 2512 size components. We will bypass the internal battery section and provide external ON/OFF control based on commands coming from the image processing pipeline, enabling deterministic grasp,release timing within our task sequence.

Finally, because measuring resistor values via image processing is not allowed, we implemented the "test" stage electrically using an ESP32 + voltage divider on a breadboard. This preserves the optional but scored testing functionality (reading resistor value / diode open-short behavior) using a method that is independent of vision, while remaining consistent with the project's emphasis on on board processing and autonomous operation.

Overall, these changes shift effort away from low level mechanical fabrication and toward the project's key differentiators; vision based identification/alignment, reliable motion execution, and electrical verification which is our new strategy for mitigating schedule and reliability risks and achieving a stable end to end demo.

Voltage Divider for Measurement

To comply with the project constraint that resistor values must not be measured using image processing, we implemented an electrical measurement method based on a voltage divider. The approach is adapted from the resistance-measurement circuit and procedure described in the Instructables tutorial, where the unknown resistor is placed in series with a known reference resistor and the midpoint voltage is sampled by a microcontroller ADC (Figure 3)

In our implementation, the Arduino is replaced by an ESP32, and the divider is formed by the unknown resistor $R_T$and a known resistor R_1. When a supply voltage $V_{in}$is applied across the series combination, the ADC measures the node voltage V_{out}between $R_T$and R_1. By the voltage divider relationship,

$$Vout = Vin \times \frac{R1}{Rt + R1}$$

Solving for the unknown resistance gives:

$$Rt = R1 \times \left(\frac{Vin}{Vout} - 1\right)$$

The ESP32 reads a raw ADC code which is converted to voltage as $V_{out} \approx V_{in} \cdot \frac{\text{ADC}}{4095}$. To improve stability, we can average multiple ADC samples and select R_1 to be in the same order of magnitude as the expected resistor values, which keeps V_{out} within a sensitive region of the ADC range.

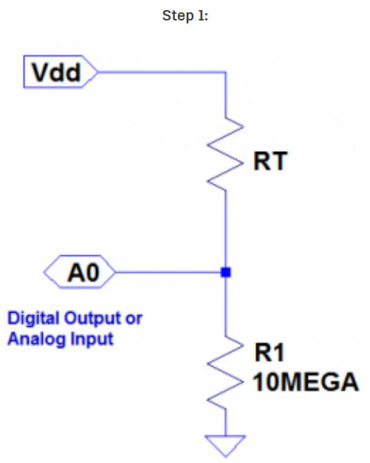

Figure 3: Voltage-divider

Budget

Table 1 lists major parts planned for procurement and integration. Unit costs and invoices will be finalized in the accompanying Excel sheet, and invoices/price proofs will be appended as required.

Item	Qty	Unit Price (TL)	Total (TL)	Status
Raspberry Pi 4 Model B	1	3314,05	3314,05	Purchased
ESP32 development board	1	248,60	248,60	Purchased
Second Hand 3D Printer	1	6000	6000	Purchased
MS-B126 Vacummed SMD Holder	1	1203,15	1203,15	Planned
USB camera (top view)	1	956	956	Purchased
Power supply & wiring	1	100,20	100,20	Purchased
Custom PCB (control/IO)	2	221	442	Planned

Table 1. Budget and procurement list

Realistic Constraints Used in the Project

Economy

The project was designed under a strict cost constraint. The initial plan (custom NEMA steppers, belts, profiles, drivers, endstops, and a separate motion controller) was evaluated as higher risk and more expensive due to additional mechanical parts and integration time. Therefore, we switched to a second hand 3D printer to reuse an already functional XYZ motion system and its built in endstops, reducing both procurement and assembly costs. The target budget was 20.000 TL, while the current total cost is 12.263,95 TL. Overall the revised approach improved cost effectiveness by minimizing custom mechanical manufacturing and debugging effort.

Environment and Climate

We aimed to minimize energy consumption by using low voltage DC subsystems (ESP32, camera/Raspberry Pi, and the printer controller) and operating the system only during active pick-and place cycles. Compared to an industrial pick and place machine, our platform has substantially lower power requirements. In addition, reusing a second hand 3D printer extends the life of existing hardware and reduces the environmental footprint associated with purchasing new mechanical components.

Sustainability

Sustainability was addressed through reuse and modularity. Repurposing a second hand 3D printer reduces electronic waste and embodied carbon. The system is designed in modular blocks (motion platform, vision/UI computer, test module, gripper module), so individual parts can be replaced or upgraded without discarding the full system.

Producibility

To ensure producibility within the course timeframe, we prioritized components that are commercially available and easy to assemble. Using the 3D printer's existing motion system improves manufacturability by avoiding complex mechanical alignment tasks (belt tensioning, squareness, endstop mounting). Electronics were kept simple and reproducible: the resistor test stage uses a standard voltage-divider topology on a breadboard/proto board and can later be migrated to a dedicated PCB.

Ethics

The project follows course rules and ethical constraints most notably, resistor value estimation via image processing is not allowed. Therefore, we perform resistor identification through an electrical test (ESP32 based voltage divider) rather than inferring resistance from visual appearance. We also avoid any use of personal data; the system operates on component images and internal measurements only.

User Health

The design reduces user workload and repetitive manual handling of SMD parts. However, user health considerations also include safe interaction: the system is intended to operate on a desk ,bench with a defined workspace to prevent accidental contact during motion. Noise and vibration are kept low by using the existing printer mechanics and short duty operation of the vacuum tool.

User Safety

Safety measures include:

- **Electrical:** low voltage operation, current limited power supplies, proper grounding, and insulation of exposed conductors.
- **Mechanical:** fixed enclosure/workspace boundaries, controlled homing using built-in endstops.
- **Fire:** avoiding battery related hazards by removing/bypassing the battery section in the vacuum tool and using regulated external power.
- **Chemical:** no hazardous chemicals are used in normal operation.

Social and Political Responsibility

The project supports broader societal goals by enabling low cost automation for electronics prototyping and education. It demonstrates accessible engineering design using widely available components. No politically sensitive functionality, surveillance, or discriminatory decision making is involved.

Engineering and Communication Interface Standards and Protocols

We follow common engineering practices and widely used communication interfaces:

- Serial communication (USB-UART) for host to controller messaging (Raspberry Pi/PC to motion controller or ESP32).
- Web based UI over local network (HTTP) for platform independent access.
- Standard GPIO level control for ON/OFF actuation of the vacuum tool. Where applicable, wiring conventions, connectorization, and documentation practices are used to improve maintainability and debugging.

Electromagnetic Compatibility (EMC) – EU Directive (89/336/EEC)

Although formal EMC certification is outside the scope of this course prototype, we apply basic EMC aware design practices: short signal wiring, proper grounding, decoupling capacitors on digital rails, and separating motor/power wiring from sensitive ADC and camera signals. Shielded or twisted pair wiring is considered for noisy lines if interference is observed. The aim is to reduce conducted and radiated emissions and improve measurement stability.

Other Constraints

- **Course constraints:** component value measurement restrictions and required autonomous operation stages
- **Time constraint:** design decisions were optimized to meet semester deadlines by reducing mechanical development workload.
- **Reliability constraint:** preference for mature subsystems to achieve repeatable positioning and stable homing.

PROJECT PLAN (WBS and GANNT Chart)

The project plan is presented with a Work Breakdown Structure (WBS) and an 8-week Gantt chart. Figures 4 and 5 are referenced throughout the plan. We decomposed the project into a small number of subsystem-oriented work packages to keep the plan readable and to ensure clear ownership. The WBS was structured hierarchically with a single top level activity representing the complete system, and four second-level activities representing the major engineering domains required for an end-to-end demonstration. Each work package has a designated activity owner responsible for planning, execution, and reporting progress.

- **1.1 Testing & Performance Measurements + ESP32 Firmware (Gaye Erdoğan):** electrical testing approach (voltage divider), measurement firmware, and performance validation metrics.
- **1.2 Raspberry Pi & UI (Erkin Coşkun Ruhi):** web based user interface and integration with the vision/control flow.
- **1.3 Mechanical Design (Arda Aslangül):** mechanical platform adaptation and motion-related integration considerations.
- **1.4 PCB (Enes Yeğin):** PCB-related tasks including design/verification activities and integration constraints.

This division allowed parallel progress while maintaining a clear integration path toward the final system level demonstration.

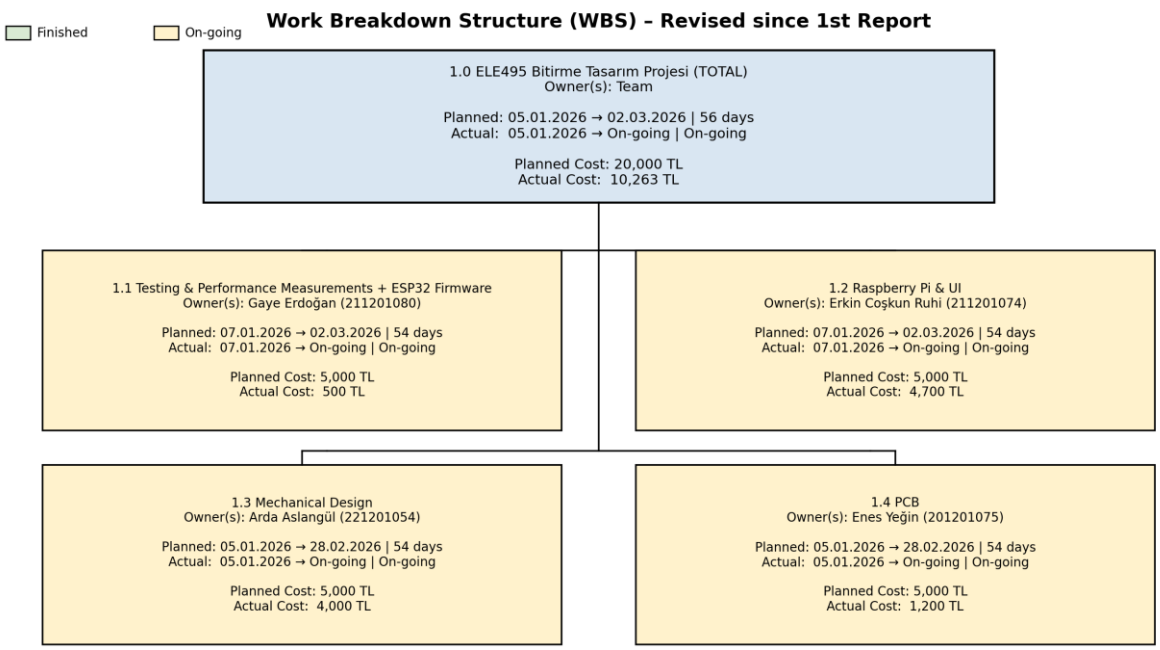

Figure 4: Work Breakdown Structure (WBS)

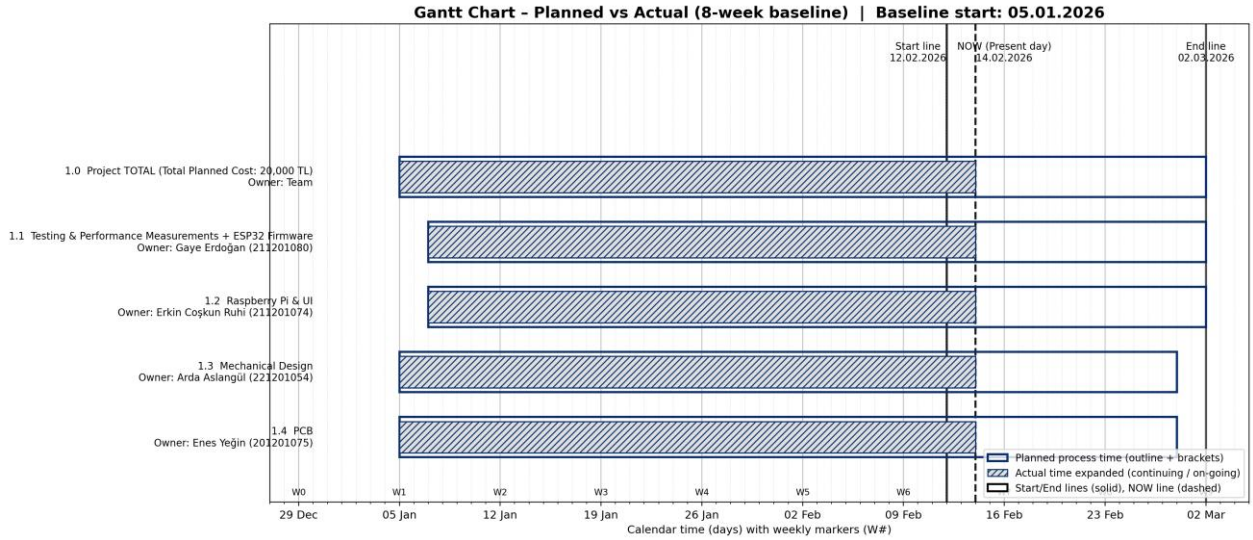

Figure 5. Gantt plan

Work Package Ownership Summary

The project plans (WBS and Gantt) served as our main control instruments for scope, schedule, cost, and responsibility management. First, the WBS created a clear mapping between deliverables and owners, which reduced ambiguity and improved accountability when tracking progress and expenditures. Second, the Gantt chart enabled continuous monitoring of planned vs. actual status and made schedule risks visible early, allowing us to adjust task timing and priorities before integration milestones.

Most importantly, planning supported informed decision making when the project strategy changed. By updating the WBS/Gantt accordingly, we maintained a consistent baseline for communication with the mentor and for internal coordination. Overall, the project plans improved our ability to execute tasks in parallel, manage interfaces between subsystems, and converge reliably to an integrated prototype within the semester timeline.

References

[1] OpenPnP. (n.d.). OpenPnP – Open Source SMT Pick and Place. Retrieved January 22, 2026, from https://openpnp.org/

[2] Dickinson, T. (Ed.). (2025, July 31). OpenPnP User Manual (OpenPnP Wiki). GitHub. Retrieved January 22, 2026, from https://github.com/openpnp/openpnp/wiki/User-Manual

[3] markmaker. (2024, February 1). LitePlacer (OpenPnP Wiki). GitHub. Retrieved January 22, 2026, from https://github.com/openpnp/openpnp/wiki/LitePlacer

[4] Parpală, R. C., Ivan, M. A., Parpală, L. F., Coteţ, C. E., & Popa, C. L. (2024). Camera Calibration in High-Speed Robotic Assembly Operations. Applied Sciences, 14(19), 8687. https://doi.org/10.3390/app14198687

[5] Instructables, "Arduino Resistance Measurement" (used as reference; ESP32 used instead of Arduino).