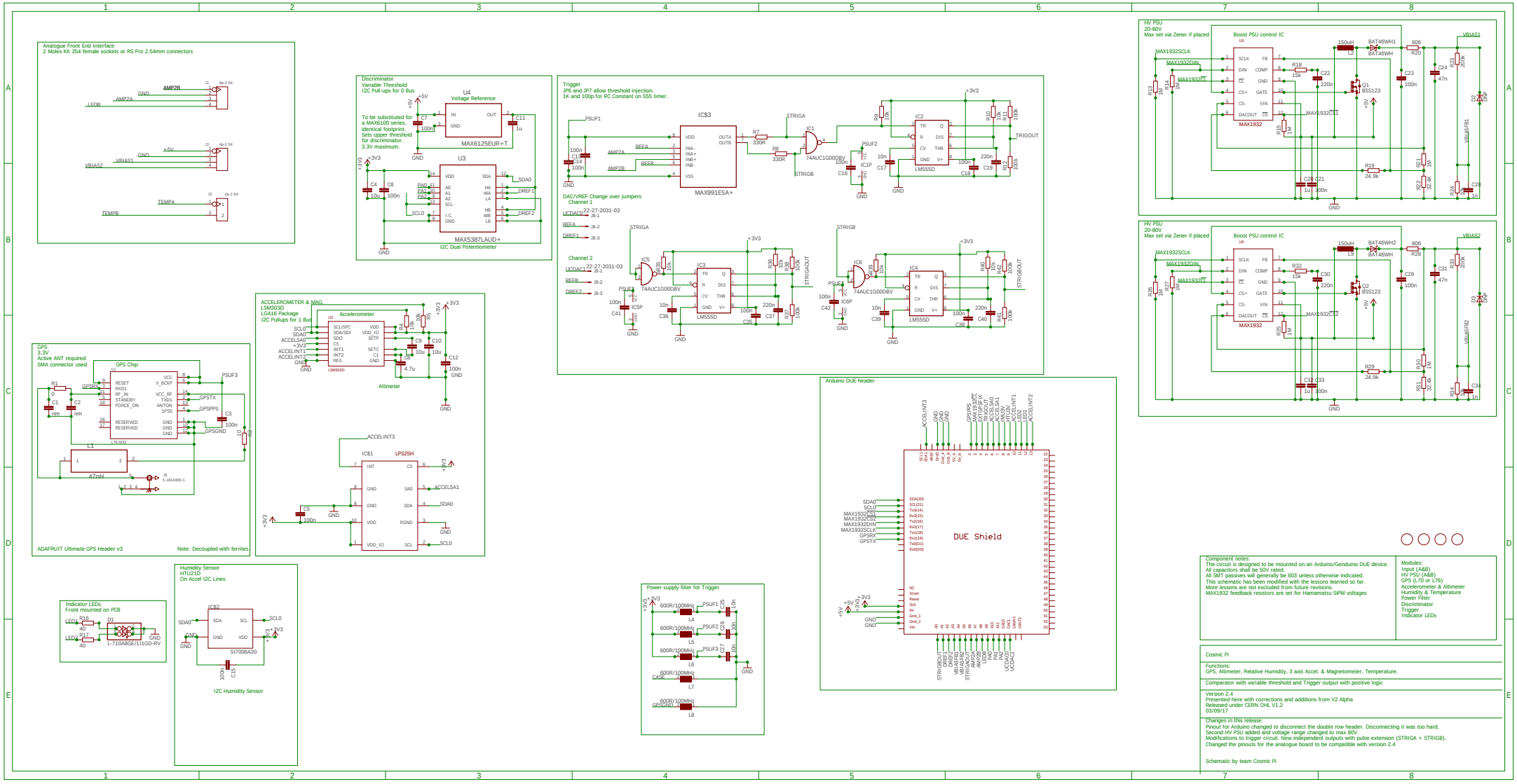
Analogue Front End Interface
2 Molex KK 254 female sockets or RS Pro 2.54mm connectors
Discriminator
Variable Threshold
I2C Pull-ups for 0 Bus
To be substituted for a MAX6100 series, identical footprint. Sets upper threshold for discriminator. 3.3V maximum.
U4
Voltage Reference
MAX6125EUR+T
U3
MAX5387LAUD+
I2C Dual Potentiometer
Trigger
JP6 and JP7 allow threshold injection.
1K and 100p for RC Constant on 555 timer.
IC$3
MAX991ESA+
DAC/VREF Change over jumpers
Channel 1
Channel 2
HV PSU
20-80V
Max set via Zener if placed
Boost PSU control IC
MAX1932
ACCELEROMETER & MAG.
LSM303D
LGA16 Package
I2C Pullups for 1 Bus
Accelerometer
Altimeter
GPS
3.3V
Active ANT required
SMA connector used
GPS Chip
ADAFRUIT Ultimate GPS Header v3
Note: Decoupled with ferrites
Arduino DUE header
DUE Shield
Indicator LEDs
Front mounted on PCB
Humidity Sensor
HTU21D
On Accel I2C Lines
SI7006A20
I2C Humidity Sensor
Power supply filter for Trigger
Component notes:
The circuit is designed to be mounted on an Arduino/Genduino DUE device.
All capacitors shall be 50V rated.
All SMT passives will generally be 603 unless otherwise indicated.
This schematic has been modified with the lessons learned so far.
More lessons are not excluded from future revisions.
MAX1932 feedback resistors are set for Hamamatsu SIPM voltages
Modules:
Input (A&B)
HV PSU (A&B)
GPS (L70 or L76)
Accelerometer & Altimeter
Humidity & Temperature
Power Filter
Discriminator
Trigger
Indicator LEDs
Cosmic Pi
Functions:
GPS, Altimeter, Relative Humidity, 3 axis Accel. & Magnetometer, Temperature.
Comparator with variable threshold and Trigger output with positive logic
Version 2.4
Presented here with corrections and additions from V2 Alpha
Released under CERN OHL V1.2
03/09/17
Changes in this release:
Pinout for Arduino changed to disconnect the double row header. Disconnecting it was too hard.
Second HV PSU added and voltage range changed to max 80V.
Modifications to trigger circuit. New independent outputs with pulse extension (STRIGA + STRIGB).
Changed the pinouts for the analogue board to be compatible with version 2.4
Schematic by team Cosmic Pi