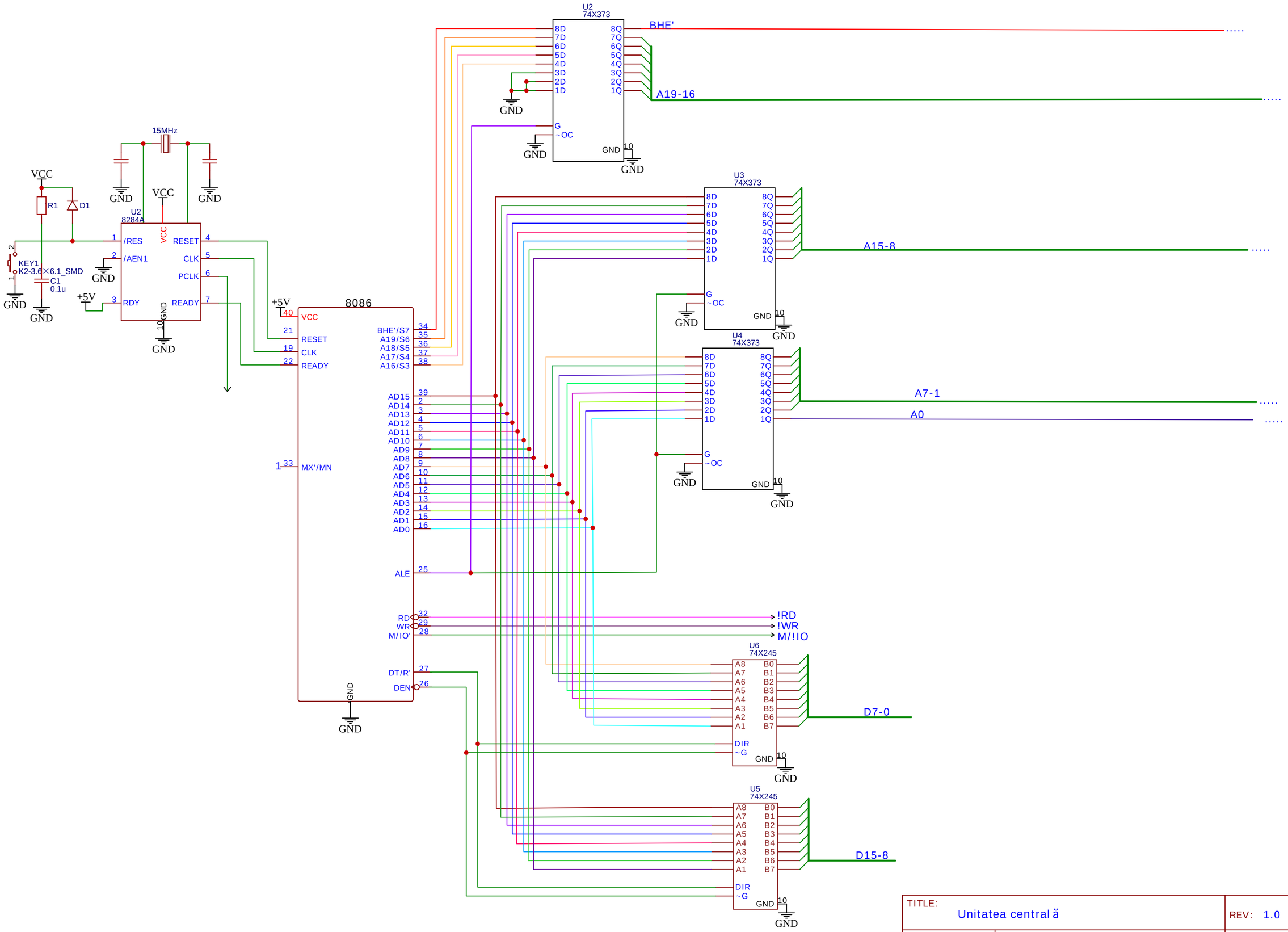

TITLE: Unitatea centrală		REV: 1.0
EasyEDA	Company: UPT	Sheet: 1/1
	Date: 2023-11-05 Drawn By: Ţunea Cosmina	

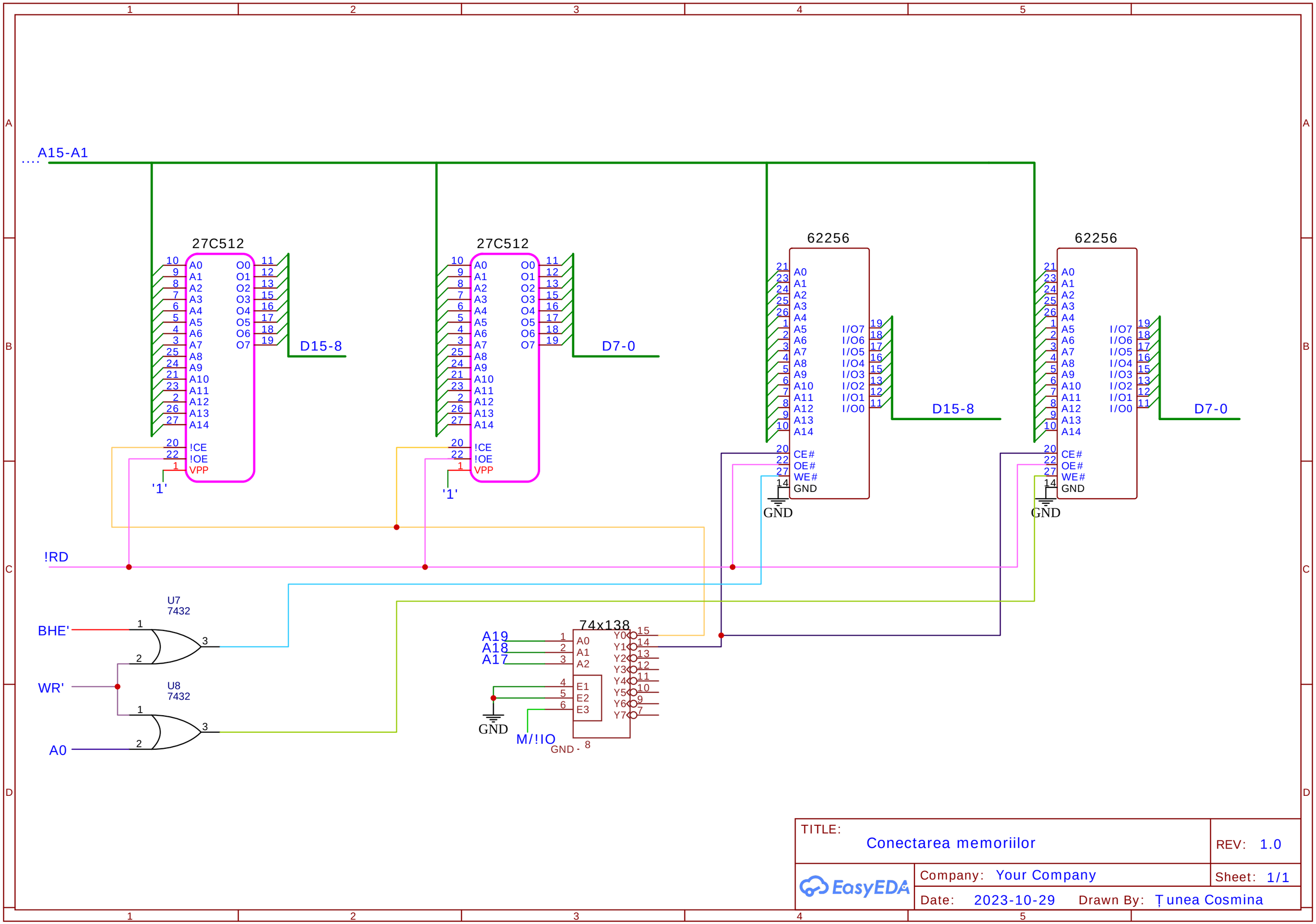

TITLE: Conectarea memoriilor		REV: 1.0
EasyEDA	Company: Your Company	Sheet: 1/1
	Date: 2023-10-29 Drawn By: Țunea Cosmina	

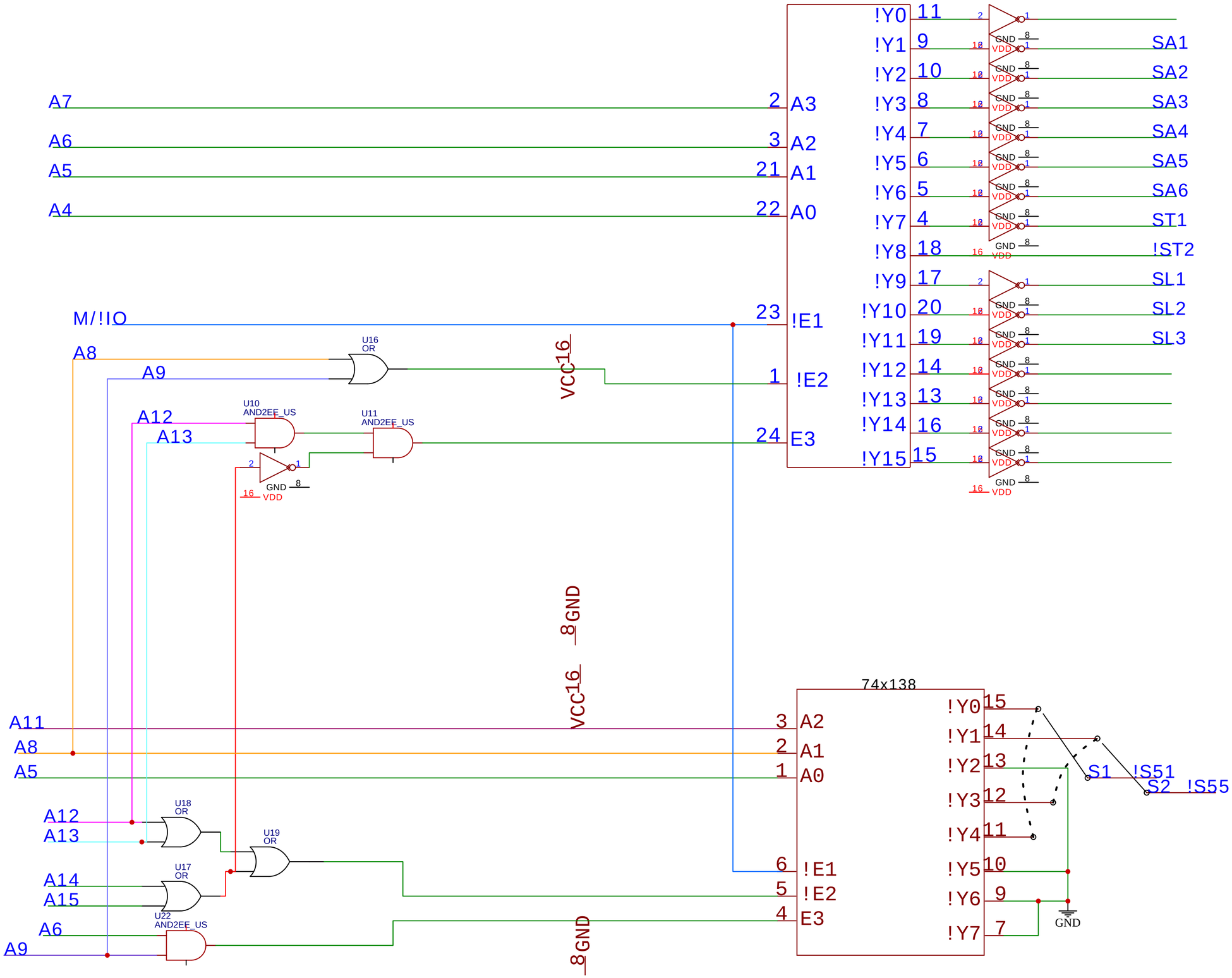

TITLE: Decodificatorul de porturi		REV: 1.0
EasyEDA	Company: Your Company	Sheet: 1/1
	Date: 2023-11-10 Drawn By: Ţunea Cosmina	

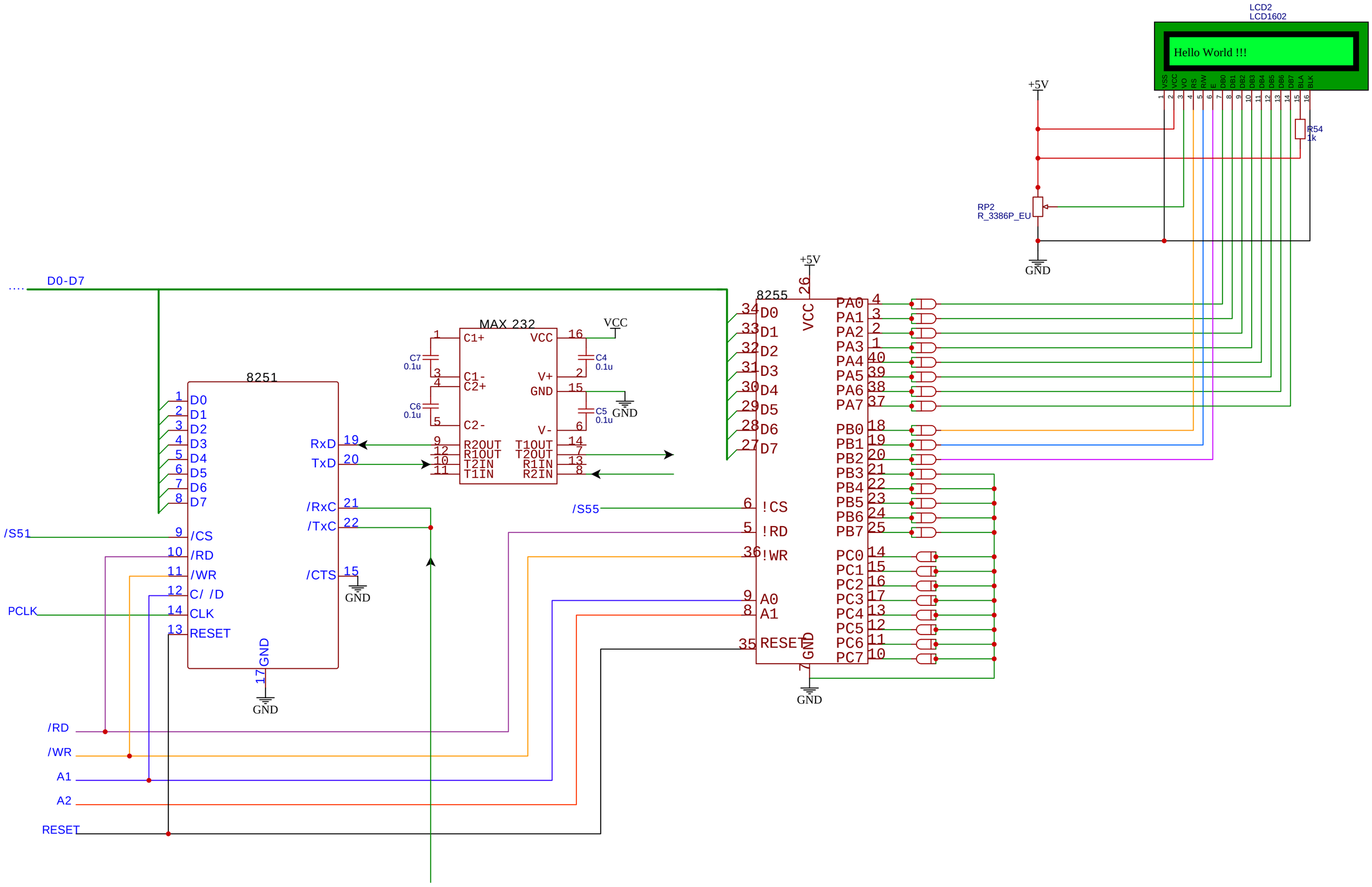

TITLE: Interfe ț ele serial ă ș i paralel ă		REV: 1.0
EasyEDA	Company: Your Company	Sheet: 1/1
	Date: 2023-11-13 Drawn By: Ț unea Cosmina	

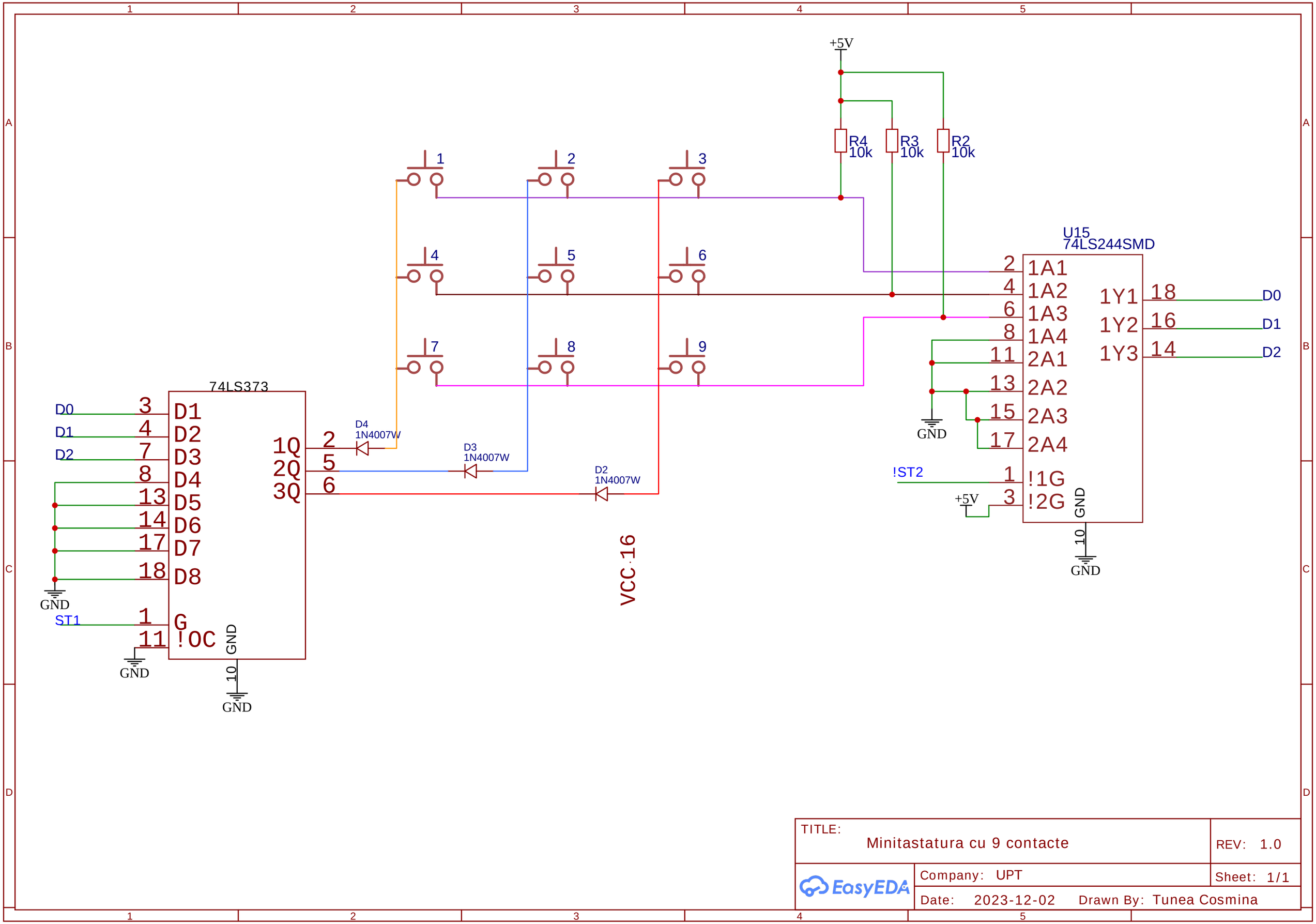

TITLE: Minitastatura cu 9 contacte		REV: 1.0
EasyEDA	Company: UPT	Sheet: 1/1
	Date: 2023-12-02 Drawn By: Tunea Cosmina	

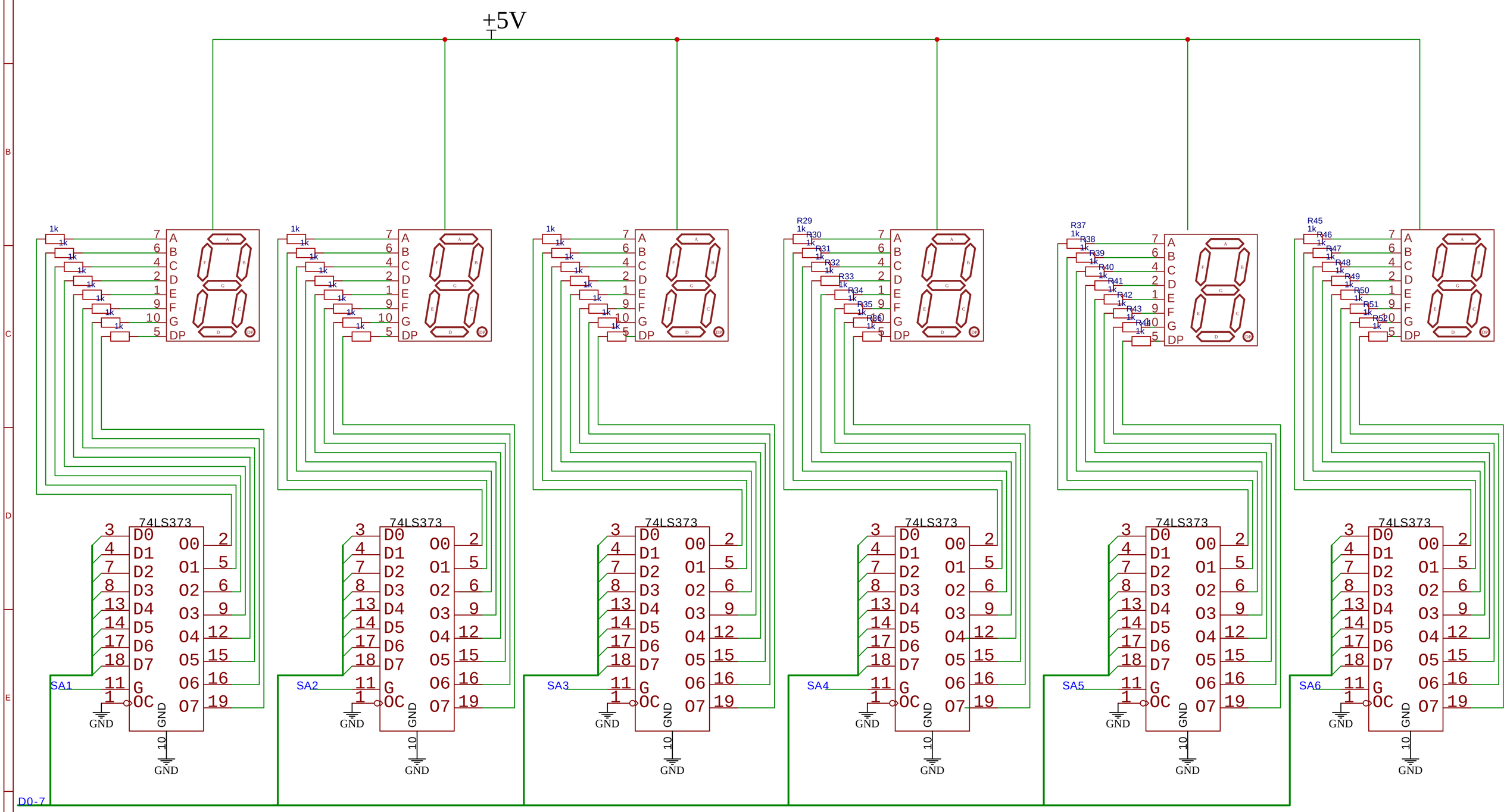

TITLE: Afisaj pe 7 segmente	REV: 1.0
Company: UPT	Sheet: 1/1
Date: 2023-12-03	Drawn By: Tunea Cosmina

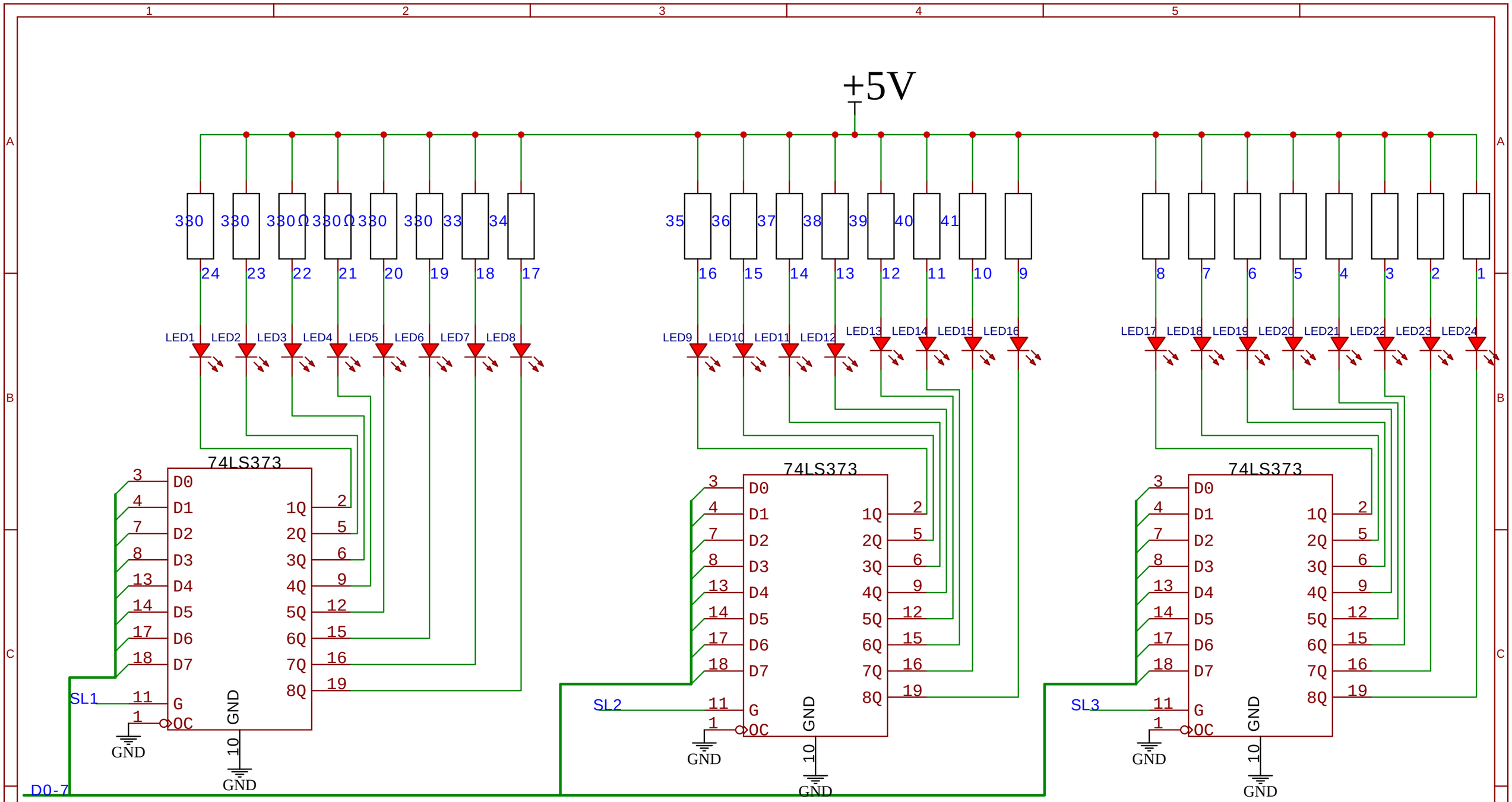

TITLE: 24 LEDURI		REV: 1.0
EasyEDA	Company: Your Company	Sheet: 1/1
	Date: 2023-12-03 Drawn By: Tunea Cosmina	