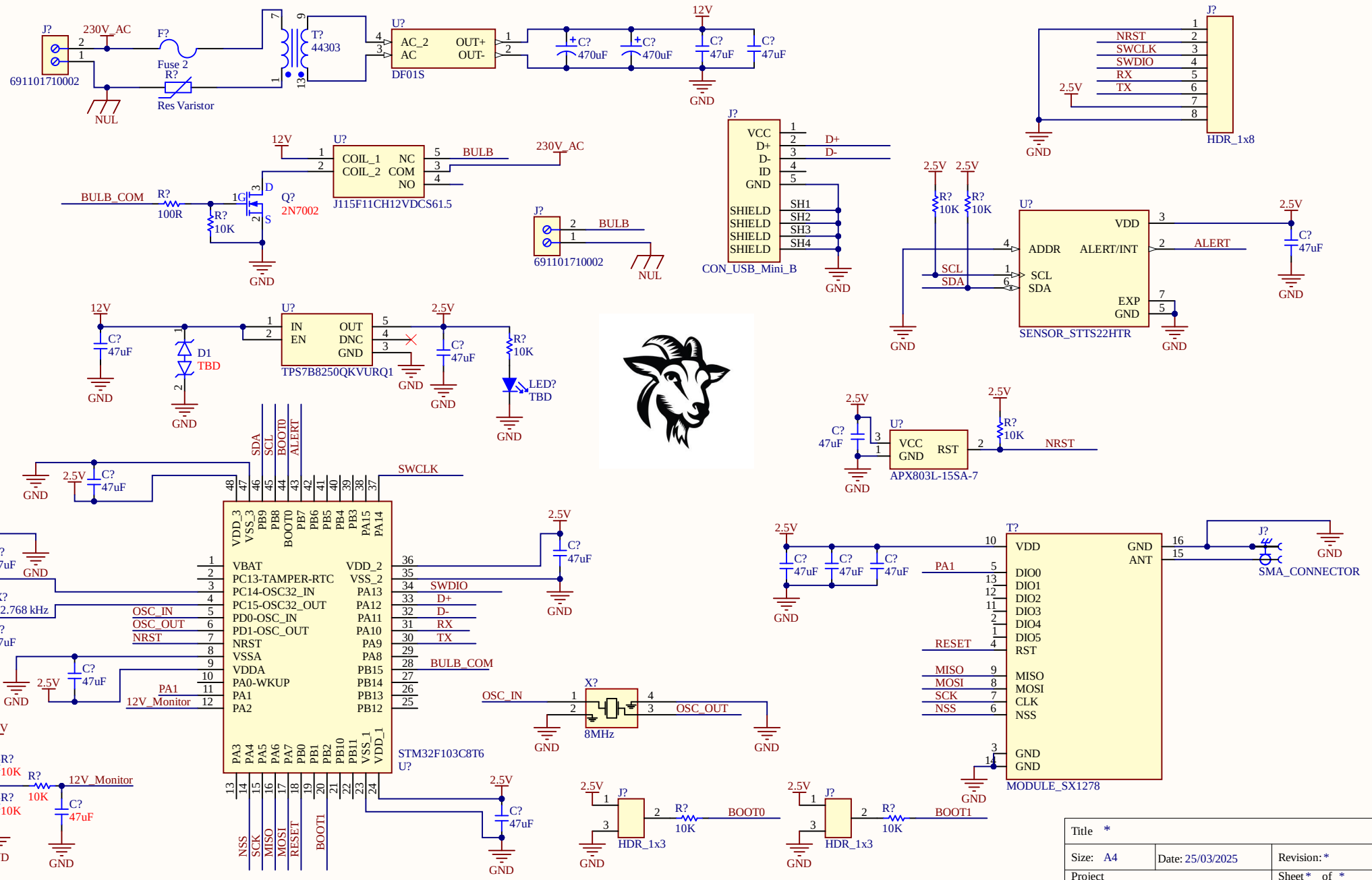https://www.st.com/en/mems-and-sensors/stts22h.html