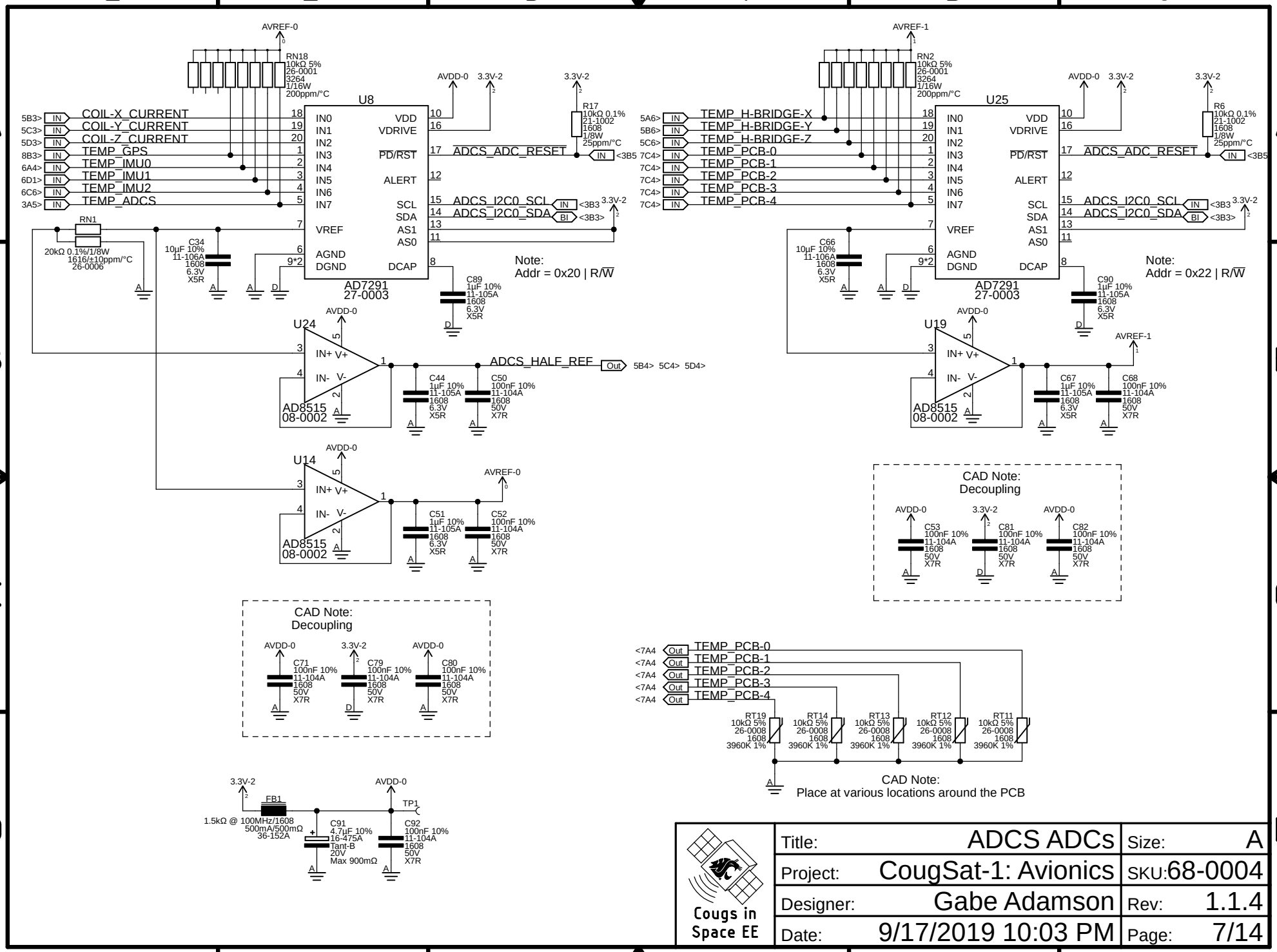

Cougs in Space EE

Title:	ADCS ADCs	Size:	A
Project:	CougSat-1: Avionics	SKU:	68-0004
Designer:	Gabe Adamson	Rev:	1.1.4
Date:	9/17/2019 10:03 PM	Page:	7/14