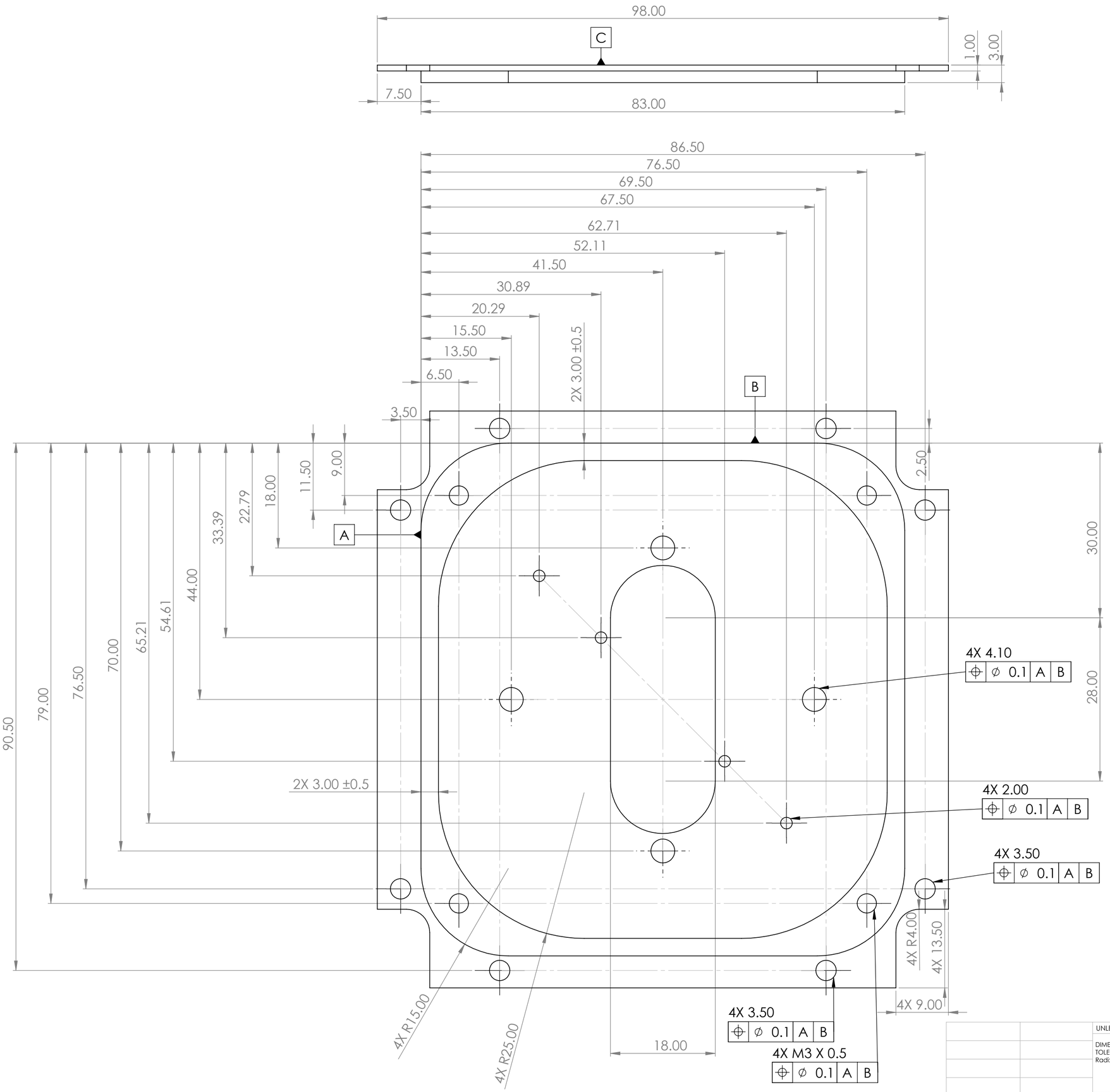

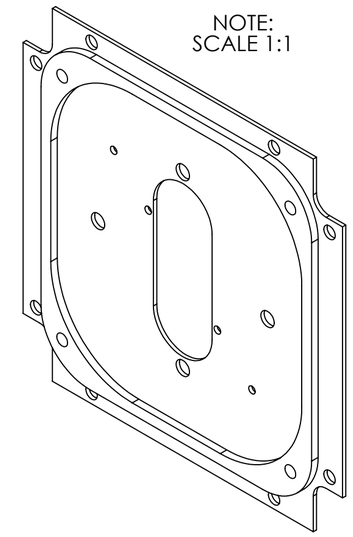

NOTE:
SCALE 1:1

NOTE:
BREAK ALL EDGES

PROPRIETARY AND CONFIDENTIAL

THE INFORMATION CONTAINED IN THIS DRAWING IS THE SOLE PROPERTY OF COUGS IN SPACE. ANY REPRODUCTION IN PART OR AS A WHOLE WITHOUT THE WRITTEN PERMISSION OF COUGS IN SPACE IS PROHIBITED.

			NAME	DATE
		UNLESS OTHERWISE SPECIFIED:		
		DIMENSIONS ARE IN Millimeters TOLERANCES: ±0.1mm Radi: ±1mm	DRAWN NR	01/27/19
			CHECKED	
			ENG APPR.	
			MFG APPR.	
		INTERPRET GEOMETRIC TOLERANCING PER:	Q.A.	
		MATERIAL AL 6061-T6	COMMENTS: Drawn by Nathan Rubie Washington State University Cougs In Space	
NEXT ASSY	USED ON	FINISH 3.2 μm		
APPLICATION		DO NOT SCALE DRAWING		

COUGS IN SPACE (WSU)

TITLE: Str_nZ4

SIZE	DWG. NO.	REV
C	000001	A
SCALE: 2:1	WEIGHT:	SHEET 1 OF 1

SOLIDWORKS Educational Product. For Instructional Use Only.