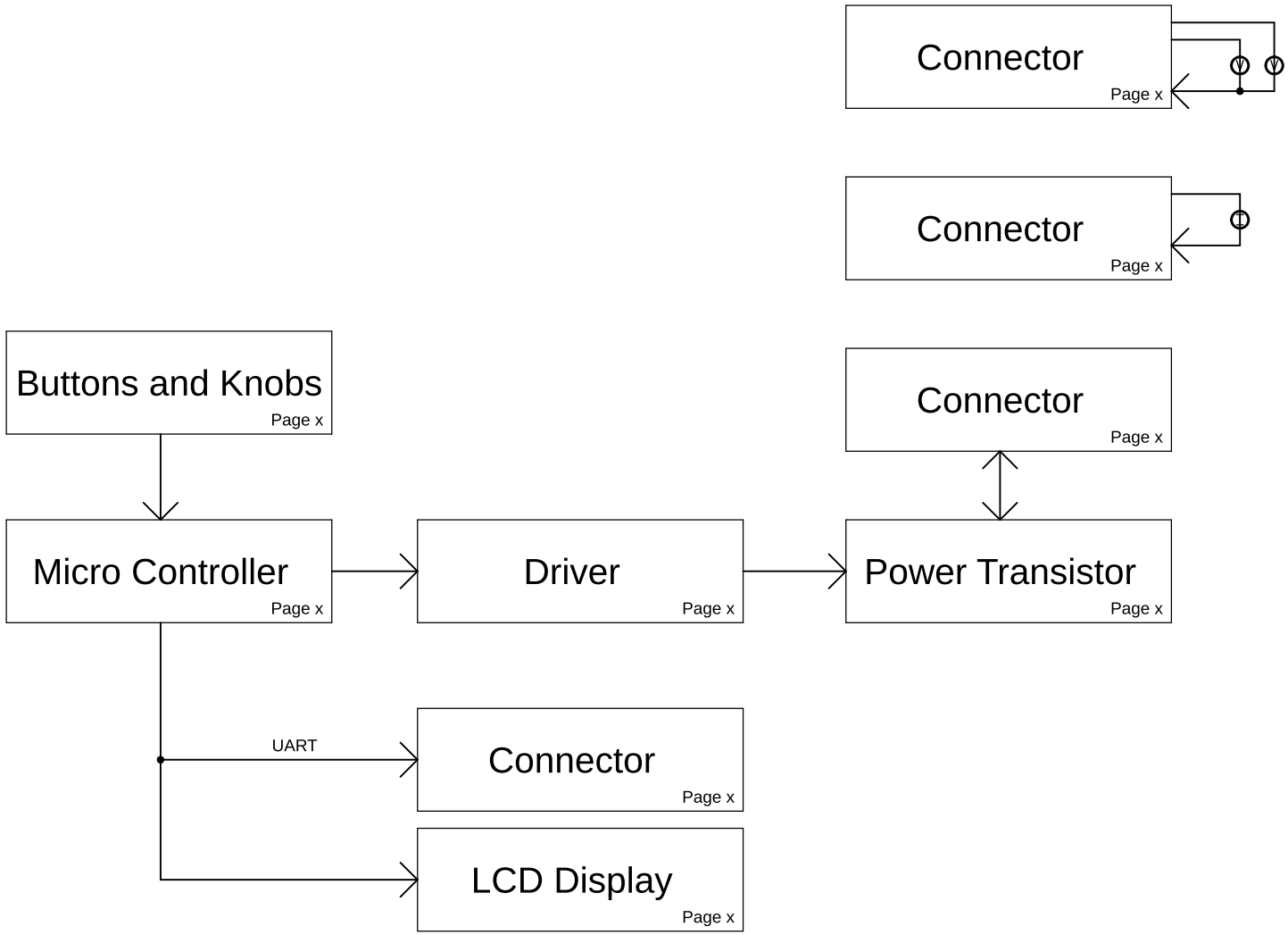

Cougs in Space EE	Title:	Block Diagram	Size: A
	Project:	Electronic Load	SKU:68-0015
	Designer:	Ailee Simpson	Rev: 1.0.0
	Date:	9/8/2019 11:24 AM	Page: 1/1