| REVISIONS | | | | |
|---|---|---|---|---|
| ZONE | REV | DESCRIPTION | DATE | APPROVED |

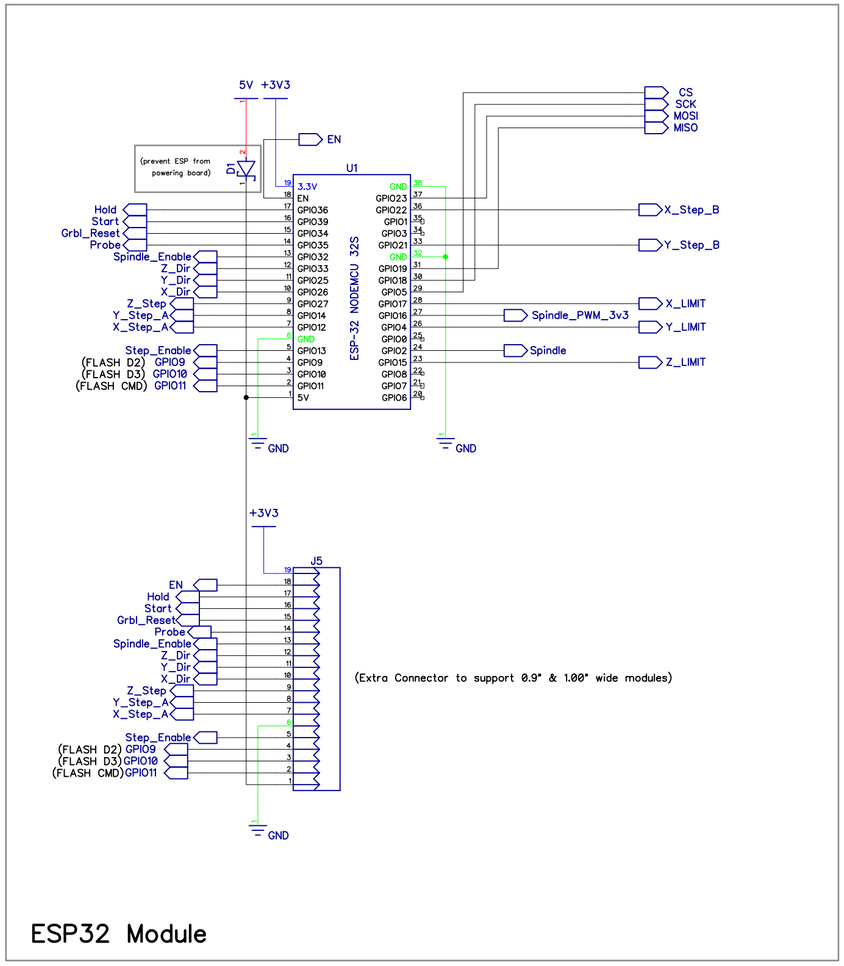


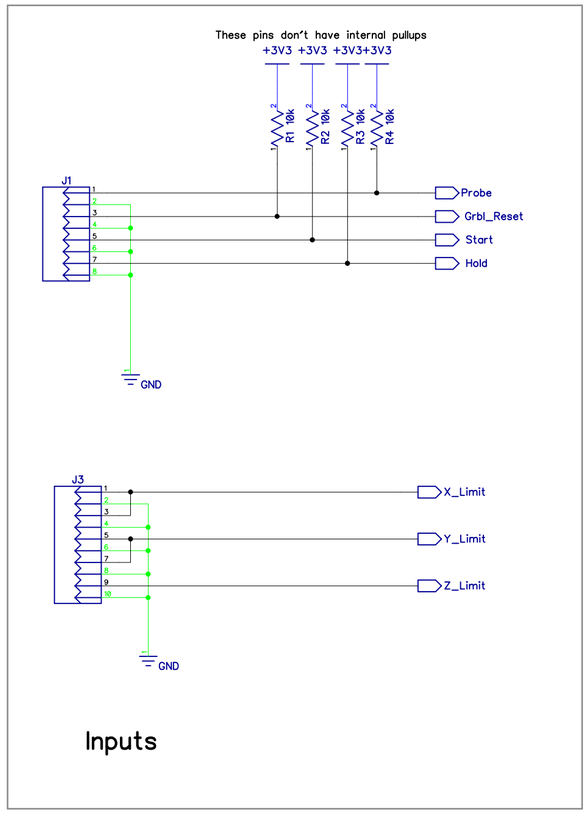


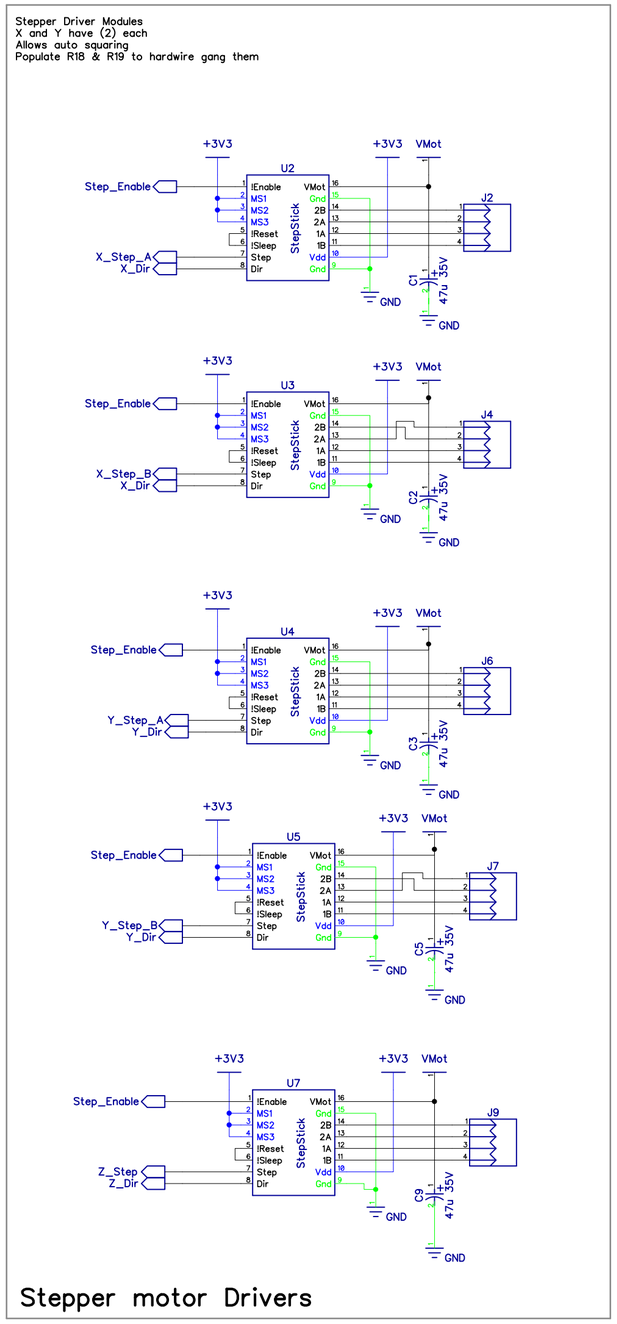


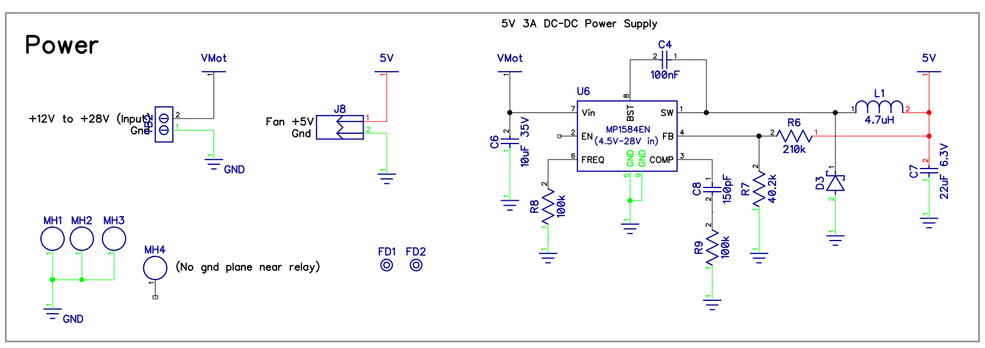


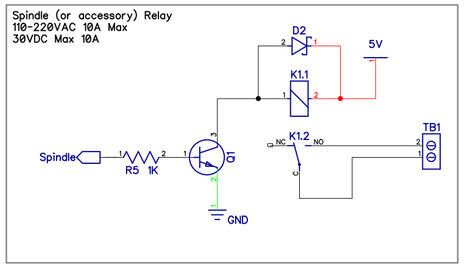


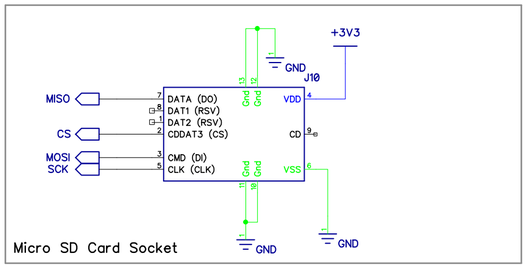


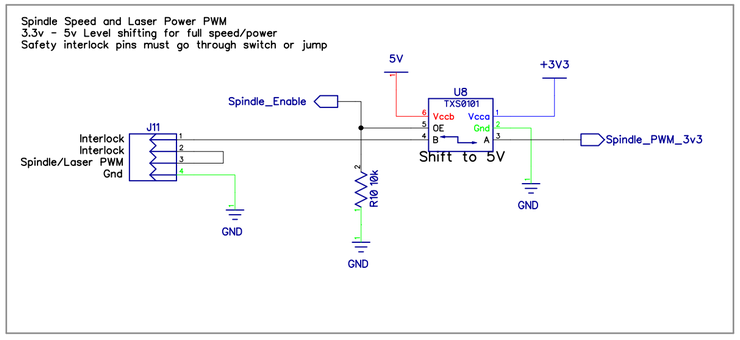


| | MPCNC Controller V1.2 | | | |
|---|---|---|---|---|
| | A Controller for Grbl_ESP32 | | | |
| Buildlog.net | SIZE | FSCM NO. | DWG NO. | REV 1 |
| | SCALE | | Sheet 1 | |