REVISIONS				
ZONE	REV	DESCRIPTION	DATE	APPROVED

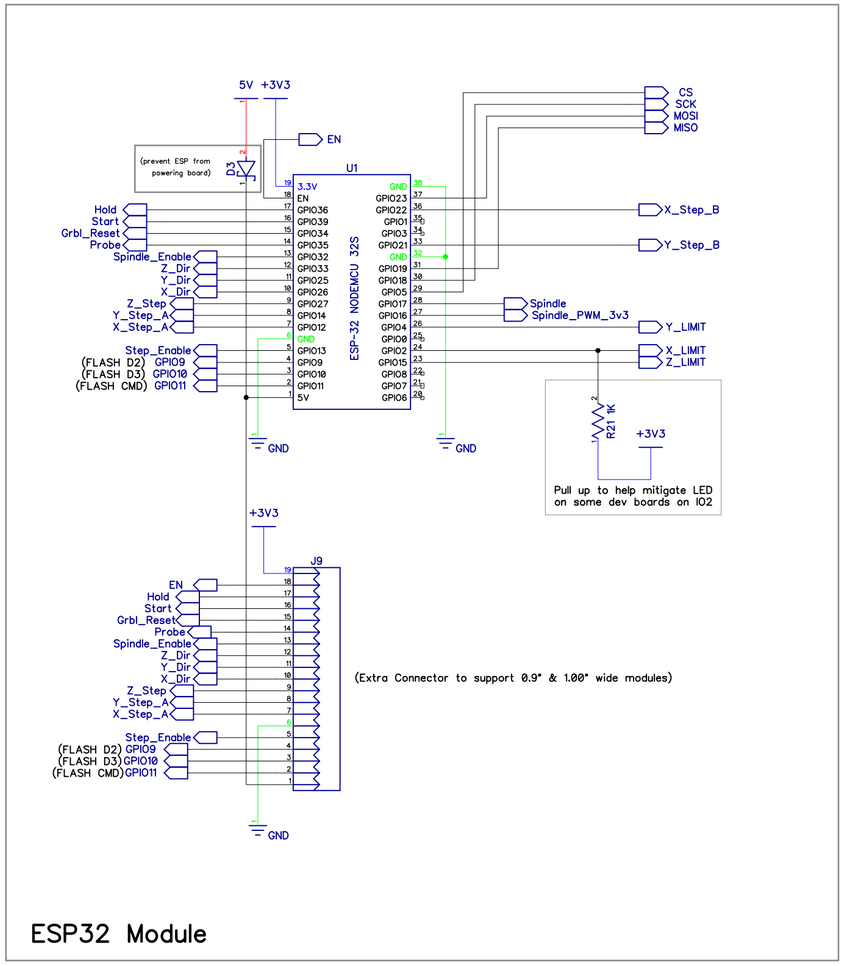

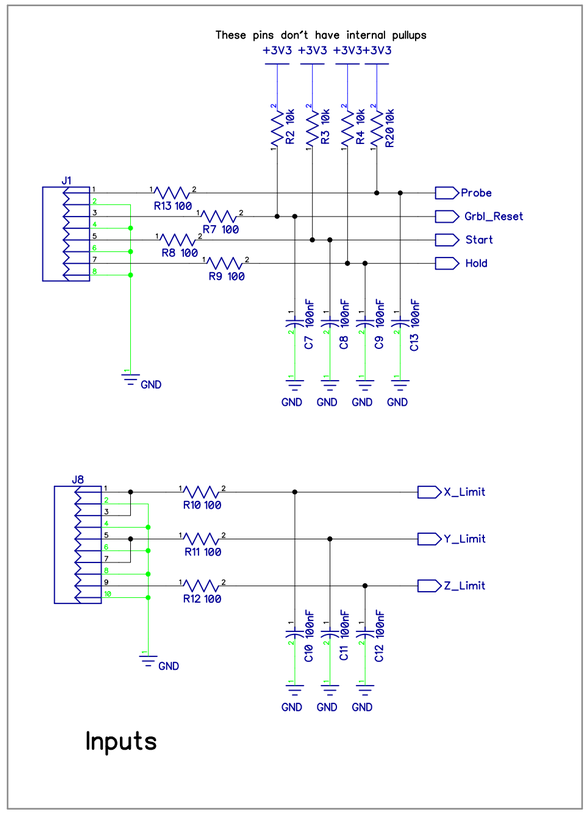

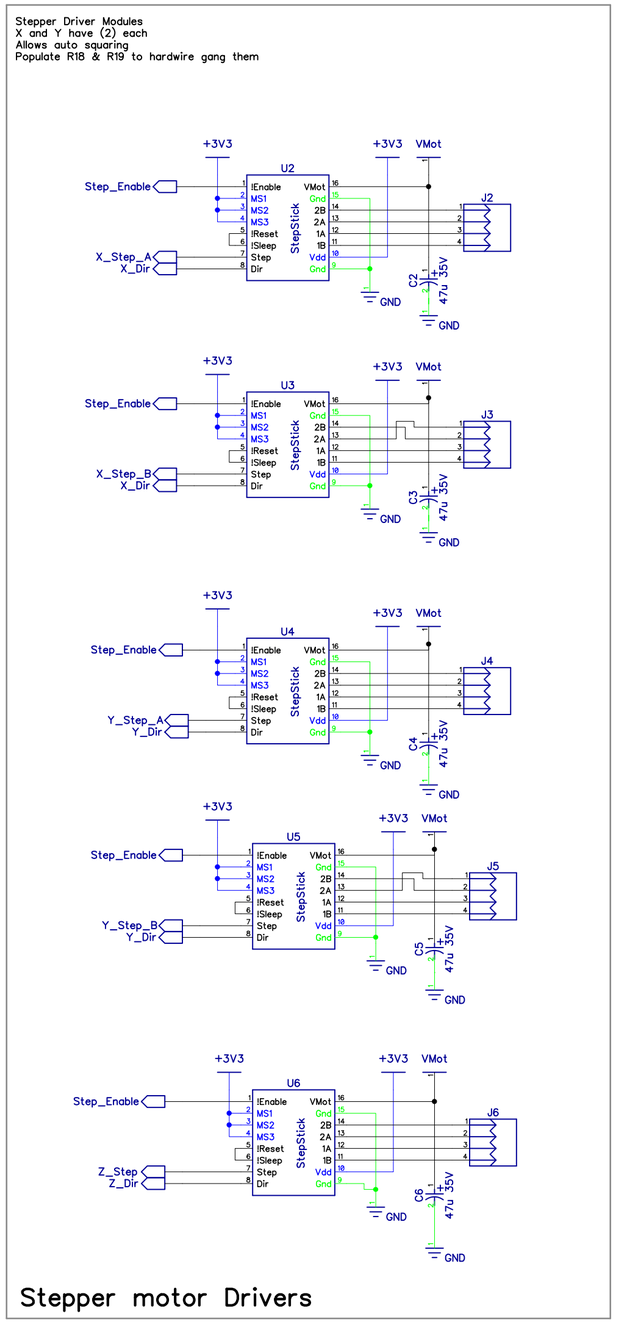

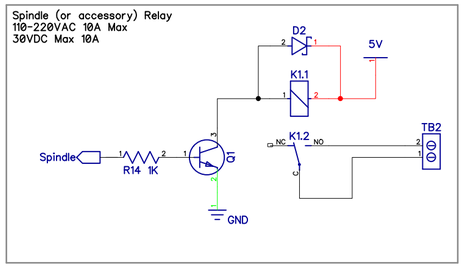

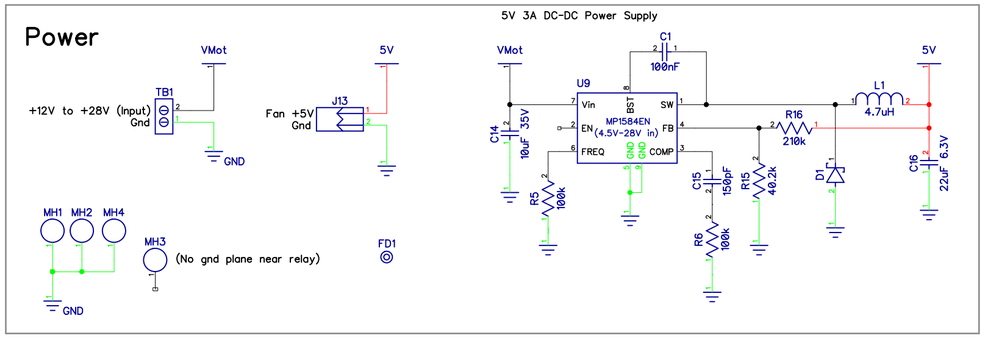

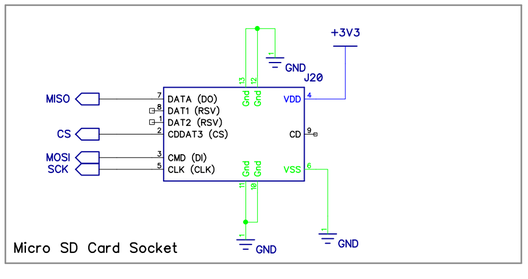

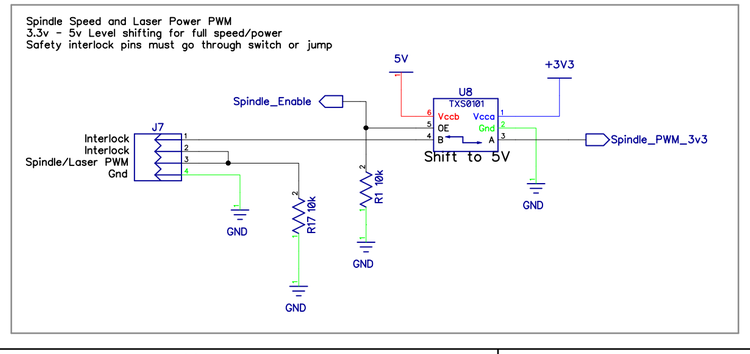

	MPCNC Controller V1			
	A Controller for Grbl_ESP32			
Buildlog.net	SIZE	FSCM NO.	DWG NO.	REV 1
	SCALE		Sheet 1	