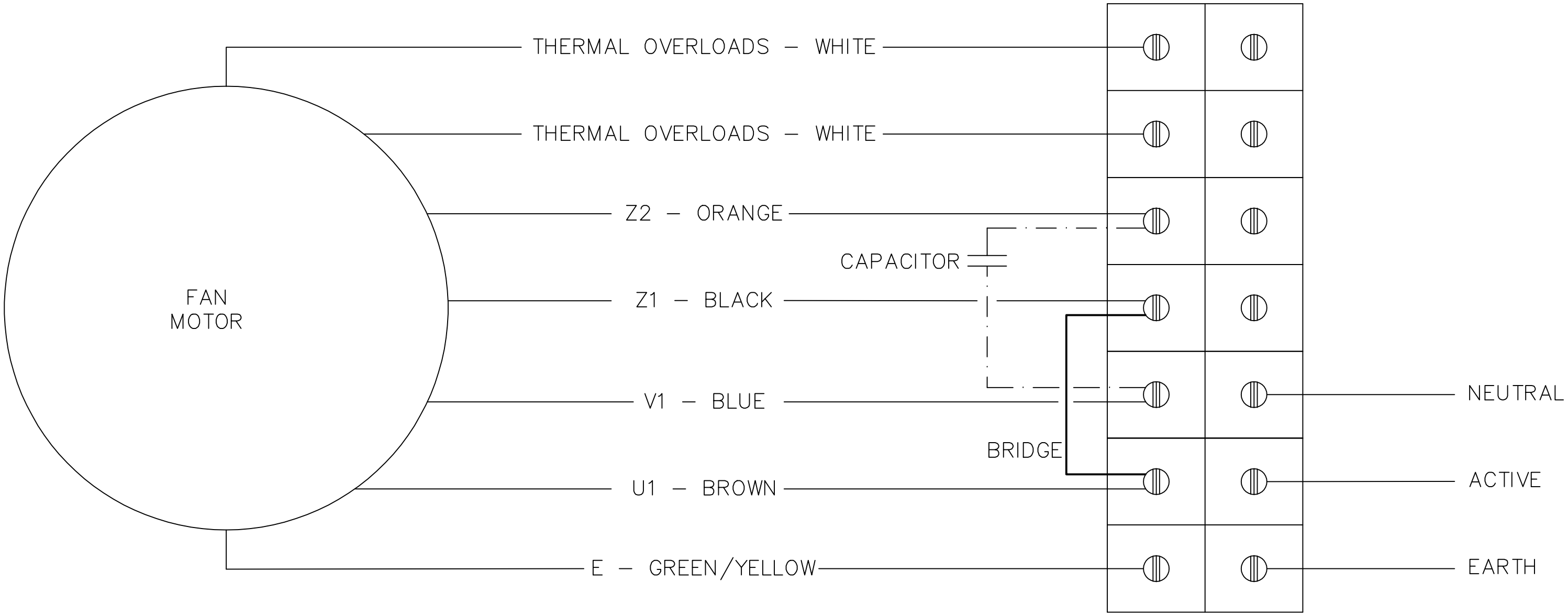

MODELS
* MCV400–560MM 240V
* MUC400–560MM 240V
* MUCR400–560MM 240V

NOTE:
1. CHECK ROTATION OF UNIT IS AS PER LABEL ON FAN (OR WARRANTY IS VOID)
2. PLEASE ENSURE THERMAL OVERLOAD IS CONNECTED (OR WARRANTY IS VOID)
3, BRIDGE IS FACTORY PRE–WIRED
4. CAPACITOR IS FACTORY PRE–WIRED (IT IS LOCATED UNDERNEATH THE CAP OF THE MOTOR WEATHERPROOF PLATE)

REV.	DRG No.					
		A	–	ISSUED FOR APPROVAL	JULY 11	CFM
		REV.	CHANGE No.	DESCRIPTION OF CHANGE	DATE	BY

CFM FANS
56 TARNARD DRIVE – BRAESIDE VICTORIA 3195
PH: +61 3 9580 7790
FAX: +61 3 9580 7796
EMAIL: mail@cfmfans.com.au
WEBSITE: www.cfmfans.com.au

THE INFORMATION CONTAINED HEREIN IS CONFIDENTIAL TO CFM FANS AND SHALL NOT BR REPRODUCED, COPIED OR DISCLOSED IN WHOLE OR IN PART, OR USED FOR MANUFACTURE OR FOR ANY OTHER PURPOSE WITHOUT THE WRITTEN PERMISSION OF CFM FANS. THIS PRINT IS TO BE RETURNED UPON DEMAND DESTROY OLD REVISIONS

UNLESS OTHERWISE STATED DIMENSIONS ARE OUTSIDE DIMS, IN MILIMETRES AND TO TOLERANCES
LINEAR: ±1 ANGLE: ±10' (MIN) HOLES: WITHIN 0.5 OF TRUE POSITION

MAT'L:
FINISH: .....
DRAWN: CFM Fans
DATE: JULY' 11
CHECKED: M.KOTSIKAS
SCALE: NTS
SHEET: A3

MODEL:
DIAGRAM # 12

DESCRIPTION:
FOR MCV, MUC & MUCR400–560 SERIES–SINGLE PHASE

SUP'D No: REV A