Peace and Conflict: Journal of Peace Psychology

Intergroup Contact and the Mediating Role of Intergroup Trust on Outgroup Evaluation and Future Contact Intentions in Cyprus and Northern Ireland

Shelley McKeown and Charis Psaltis

Online First Publication, July 13, 2017. http://dx.doi.org/10.1037/pac0000275

CITATION

McKeown, S., & Psaltis, C. (2017, July 13). Intergroup Contact and the Mediating Role of Intergroup Trust on Outgroup Evaluation and Future Contact Intentions in Cyprus and Northern Ireland. *Peace and Conflict: Journal of Peace Psychology*. Advance online publication. http://dx.doi.org/10.1037/pac0000275

Peace and Conflict: Journal of Peace Psychology
© 2017 American Psychological Association
1078-1919/17/$12.00 http://dx.doi.org/10.1037/pac0000275

Intergroup Contact and the Mediating Role of Intergroup Trust on Outgroup Evaluation and Future Contact Intentions in Cyprus and Northern Ireland

Shelley McKeown
University of Bristol

Charis Psaltis
University of Cyprus

It is well supported that intergroup contact reduces prejudice and that positive contact can increase trust and improve attitudes between groups in conflict. In segregated societies, however, contact is often difficult or undesirable when political parties or institutions obstruct interactions contact. Therefore, when contact does occur it is vital that it is of positive quality that could potentially lead to increased intentions for further contact, as a way of facilitating sustained contact, desegregation and promoting peace. With this in mind, the present article examines intergroup contact, intergroup trust, and future contact intentions in 2 conflict settings; Cyprus and Northern Ireland. Participants took part in an online survey that asked them to report on their contact experiences, intergroup trust, outgroup evaluation, and future contact intentions. Separate models are tested for Protestants and Catholics in Northern Ireland (n = 268) and for Greek Cypriots and Turkish Cypriots in Cyprus (n = 408). As expected, participants from Northern Ireland experienced more and better quality contact compared with participants from Cyprus. For Protestants, Catholics, and Greek Cypriots, results show that quality of contact, above quantity of contact, predicts future contact intentions, and improved attitudes through the mediation of intergroup trust. For Turkish Cypriots, contact quality additionally directly predicted outgroup evaluation without necessarily increasing trust. We argue that positive contact is an important route for promoting desegregation in societies with high residential segregation but that it is vital to understand contextual and group status when understanding these relationships.

Public Significance Statement

This paper aimed to evaluate intergroup contact as a tool to promote intergroup relations amongst Protestants and Catholics in Northern Ireland and Greek and Turkish Cypriots in Cyprus. Specifically, it focused on the role of contact in promoting intergroup trust and thereby future contact interactions and outgroup evaluation. A survey was conducted in these two contexts with results showing that for Protestants, Catholics, and Greek Cypriots, quality of contact (above quantity of contact) was associated with future contact intentions and outgroup evaluation through the mediation of intergroup trust. For Turkish Cypriots, contact quality was directly related to outgroup evaluation without necessarily increasing trust. This research contributes to understanding the role of positive contact in conflict settings.

Keywords: intergroup contact, trust, peacebuilding, Northern Ireland, Cyprus

This document is copyrighted by the American Psychological Association or one of its allied publishers.
This article is intended solely for the personal use of the individual user and is not to be disseminated broadly.

Peace is not merely the absence of war and as such, the end of conflict and structural reform is not the only concern when promoting peace. In this article, we explore the role of intergroup contact as a peacemaking tool in two contexts of high residential segregation; among Protestants and Catholics in Northern Ireland, and Greek Cypriots and Turkish Cypriots in Cyprus. Although

Editor's Note. Continue the conversation by submitting your comments and questions about this article/book review to PeacePsychology.org/peaceconflict. (The Editor of PeacePsychology.org reserves the right to exclude material that fails to contribute to constructive discussion.)

SHELLEY MCKEOWN holds a PhD in Social Psychology and is a lecturer in the psychology of education at the University of Bristol's Graduate School of Education. Shelley is a social psychologist with expertise in quantitative methods whose research focuses on understanding and improving intergroup relations in diverse and conflict settings. She has published a number of books and journal articles in this area.

CHARIS PSALTIS holds a PhD in Social and Developmental Psychology from the University of Cambridge. He is currently an Associate Professor of Social and Developmental Psychology at the University of Cyprus. His research interests fall in the areas of Social interaction, learning and cognitive development, co-operative learning, Genetic social psychology, social representations of gender, intergroup contact and intergroup relations in Cyprus, intercultural education and integrated schools, development of national identities and history teaching and collective memory. He is Associate Editor of the European Journal of Psychology of Education.

CORRESPONDENCE CONCERNING THIS ARTICLE should be addressed to Shelley McKeown, Psychology of Education, University of Bristol, 35 Berkeley Square, Bristol, United Kingdom, BS8 1JA. E-mail: s.mckeownjones@bristol.ac.uk

both societies are experiencing lower levels of conflict (than in previous decades), segregation and negative group attitudes remain embedded in everyday life. We focus our research on the theoretical underpinnings of the contact hypothesis (Allport, 1954). This is because in conflict societies where identities are complex and competing, intergroup contact can be used to not only prevent individuals from engaging in future violence (Christie, 2006) but also in helping building trust that is a crucial element in both reaching or making viable a peace settlement that entails power sharing between communities. Based on the premise of the contact hypothesis, we examine the effects of intergroup contact (quality and quantity), both within and between the two contexts, on intergroup trust, outgroup evaluations and future contact intentions. To our knowledge, our research advances the literature on intergroup trust and intergroup relations in Northern Ireland and Cyprus by uniquely combining three key aspects: (a) examining both affect and behavioral intentions, (b) by testing these relations among real conflict groups, and in two settings, and (c) by parsing out the effects of quality and quantity of contact in relation to intergroup trust. As in previous research that has demonstrated the importance of contact quality over quantity (e.g., Binder et al., 2009; Plant & Devine, 2003), we argue that positive quality contact is particularly important in furthering desegregation as it directly relates to the building of intergroup trust that is often an important element of the intention to sustain social interactions with outgroup members.

Intergroup Contact in Conflict Settings

Intergroup conflict can result in high levels of segregation and negative group attitudes, with such segregation leaving little opportunity for groups to come together naturally in their everyday living (e.g., going to work, study in the university, or daily shopping). Consequently, many societies adopt programs and policies to encourage intergroup contact; with the hope of improving intergroup relations and preventing the continuation, or reemergence of intergroup conflict. The underlying mechanism of these interventions is often the contact hypothesis, which in its simplest form states that bringing conflicted groups together can help to reduce intergroup prejudice, and in turn foster positive community relations (Allport, 1954). This is suggested to be most effective when it occurs under certain facilitating conditions of equal status, common goals, social or institutional support, and cooperation (Allport, 1954; Pettigrew & Tropp, 2006).

Perhaps unsurprisingly, the contact hypothesis has been hailed as one of the most successful theories in social psychology (Dovidio, Gaertner, & Kawakami, 2003). Support for this comes from a meta-analysis of 515 contact studies, where the overwhelming majority illustrated a negative relationship between contact and prejudice (Pettigrew & Tropp, 2006). Moving beyond mere prejudice reduction, positive intergroup contact has been also found to reduce levels of intergroup anxiety (Barlow, Louis, & Hewstone, 2009; Stephan & Stephan, 1985), increase forgiveness (Hewstone, Cairns, Voci, Hamberger, & Niens, 2006; Tam et al., 2007), and be associated with higher levels of trust (Hargie, Dickson, Mallett, & Stringer, 2008; Tam, Hewstone, Kenworthy, & Cairns, 2009). These findings, as well as other findings specifically relating to the importance of intergroup contact in conflict and postconflict settings (Hewstone et al., 2014) demonstrate the importance of contact for reconciliation, peace, and conflict transformation because any movement toward peace requires individuals from different groups to trust one another and be willing to engage in contact to work together.

Having opportunity for contact is important, particularly for segregated settings in which contact may be infrequent or where separate educational systems and mass media create negative stereotypes of the other and one sided historical narratives of victimization (Psaltis, 2016). It is through opportunity and increased frequency of contact that individuals are more likely to engage in a meaningful encounter with the outgroup. Mere exposure and physical copresence may go someway to facilitate this. In line with previous research (Binder et al., 2009; Plant & Devine, 2003) we suggest that ensuring that contact is of positive quality is more important than contact frequency primarily because quality contact encourages individuals to make friends with those "from the other side." This is important because cooperative contact, for example in educational programs, interventions, or seminars, provides optimal conditions for contact but only for a limited amount of time. Under ideal conditions, such good quality contact would be combined with opportunities for such contact in desegregated educational settings. This is the case in research on cooperative learning among different racial and ethnic groups. For example, Slavin (1979) examined biracial learning and cross-race friendships in desegregated schools and found that those working in biracial teams compared with those in the control group developed more cross-group friendships. Weigel, Wiser, and Cook (1975) in their examination of interethnic relations found that participants working in interethnic groups were more likely to help, have respect for and like other ethnic groups as well as have more interethnic friendships. Similar findings from cooperative education have been found in Northern Ireland. Hayes and McAllister (2009) demonstrated that adults, who as children had attended religiously integrated schools, were significantly more likely than those who did not to have more intergroup contact through friendship and residency. Those attending integrated schools were also more likely to be optimistic when considering future relations. Further, McKeown, Cairns, Stringer, and Rae (2012) in their analysis of a cross-community contact scheme, found that participants who took part claimed to have more outgroup friends. They also claimed to feel more comfortable and confident when spending time with outgroup members.

Together, these research findings support the idea that it is positive contact, rather than contact alone, that can lead to attitude change and promote cooperation and friendship formation. We argue that this is particularly important in conflict settings because it is through good quality contact and friendships that intergroup trust is made possible and this is essential in the pursuit of social equality and political reform/stability.

Intergroup Trust, Peace, and Intergroup Contact

Intergroup trust can be defined as "a social bond that is characterized by feelings of security and confidence in others' good will" (Tropp, 2008, p. 91). Therefore, trust reflects the positive intentions of others and suggests absence of threat (Tropp, 2008). As a result, Nadler and Liviatan (2006) argue that trust is one of the most important factors in conflict resolution. Indeed, intergroup trust has been shown to have important consequences for

This document is copyrighted by the American Psychological Association or one of its allied publishers.
This article is intended solely for the personal use of the individual user and is not to be disseminated broadly.

This document is copyrighted by the American Psychological Association or one of its allied publishers.
This article is intended solely for the personal use of the individual user and is not to be disseminated broadly.

improving group relations on both sides of the divide (Kramer & Carnevale, 2001). It is associated with an increased likelihood to forgive outgroup members for past wrongdoing (Cehajic, Brown, & Castano, 2008). In addition, it has been found that in negotiations, increased trust can improve information exchange and facilitate cooperation between groups (Tam et al., 2009). This can play a central role in the formation of identity positions in situations of intergroup conflict. It is also of vital importance for societies trying to reach a political compromise and then also making it a viable one (Psaltis, 2012).

We suggest that intergroup trust is a more important indicator of behavioral tendencies toward outgroup members than outgroup evaluation. This is because without trust, any movement to reconciliation is likely to fail. Therefore, increasing trust among groups is of huge importance to improving intergroup relations in divided societies. One way to do this, is by encouraging intergroup contact, and more importantly good quality contact, which can help to promote trust and in turn improve intergroup relations (Tam et al., 2009). While intergroup trust has positive effects for reconciliation, building trust is difficult. Hewstone et al. (2008) argue that this is because unlike improving attitudes toward another group, trust requires individuals to take risks. This means that intergroup contact must be of a positive nature to produce the best outcomes.

One of the key conditions of intergroup contact is the pursuit of common goals, which facilitates the formation of cooperation and trust between groups. Brewer (1999) argues that cooperation between groups acts as a trust dilemma, because it requires that the groups will trust one another not to engage in tactics of exploitation. Contact therefore, provides some important seeds to help build trust between groups in conflict. It is important to acknowledge that trust must be earned and that a certain level of suspicion can be expected. Intergroup contact and encouraging friendship formation is one way to facilitate this process.

Research suggests that contact is a predictor of increased intergroup trust and that intergroup trust mediates the relationship between contact and outgroup evaluation, in addition to behavioral intentions (Tam et al., 2009; Vezzali, Capozza, Stathi, & Giovannini, 2012). Support for this comes from Vezzali et al. (2012) who tested the effects of imagined contact on intergroup trust and willingness to engage in future contact and infrahumanization and found that intergroup trust mediated the relationship between contact and infrahumanization and intention to engage in future contact. While we agree that it is vital to go beyond affective responses and to also consider behavioral intentions (as we do here) we suggest that this relationship is particularly worth exploring among real groups in the context of geographically segregated societies, beyond the laboratory. This is because if contact can increase intergroup trust, it may be an important milestone achieved by members of segregated communities; further enhancing intentions to interact with outgroup members, increasing support for the establishment of integrated institutions (e.g., education) and further dismantling the infrastructures of segregation. This is of special importance to divided societies where separation of various forms (education, economy, language, and religion) is supported institutionally but where reunification and power sharing is at stake. To our knowledge, there is little research examining these effects.

While research in the Northern Ireland context has previously examined contact, intergroup trust, and positive behavioral tendencies (Tam et al., 2009), this research did not parse out what type of contact is most effective as they focused on a multiplicative index of contact quantity by contact quality. This is an important limitation because as we argued earlier, there is no guarantee that frequent contact will necessarily be of good quality. Similarly, on the other hand planned educational programs can attain maximum quality but might be infrequent. This is exactly the situation in Cyprus, where the opening of checkpoints in 2003 offered increased opportunities for casual and more superficial contact between the two communities, but it also meant that a lot of international funding that would otherwise be channeled in contact schemes was redirected to other projects assuming (probably erroneously) that opportunities for contact with checkpoints now opened would automatically translate into good quality contact.

Therefore, we argue that our research adds value to understanding contact as a way to promote intergroup relations by testing real contact experiences among groups in conflict in two segregated contexts (Northern Ireland and Cyprus), by including both affective and behavioral measures and by understanding how both the quality and quantity of intergroup contact influences these relationships. We believe that our research is particularly relevant in conflict contexts where group dynamics are ever salient and the representation of intergroup contact itself can differ depending on group identification. For example, in Cyprus whereby the Greek Cypriot community crossing over to the Turkish Cypriot community has been stigmatized by some political parties as morally wrong and as giving indirect recognition to the internationally nonrecognized state in the north of Cyprus (Smeekes, McKeown, & Psaltis, in press). This resulted in about one in three Greek Cypriots never having crossed to the other community, thus reducing substantially their opportunities for intergroup contact. We argue that future contact intentions is important in understanding the real life impact of contact on intergroup trust in a context of residential segregation.

Two "Troubles" in Context and Residential Segregation

Before moving on, it is important to consider the historical and contextual issues arising in the two case studies presented in this article. A brief outline of relations in each is considered.

Northern Ireland

The conflict in Northern Ireland (colloquially known as the "Troubles") is arguably an ethno-religious conflict underpinned by historical, religious, political, economic, and psychological elements and arose from a struggle between those who wish to see Northern Ireland remain part of the United Kingdom (Protestants/Unionists/Loyalists) and those who wish to see the reunification of the island of Ireland (Catholics/Nationalists/Republicans). During the 30 years of the troubles, it is estimated that 3,600 people were killed, and a further 30,000+ injured (Fitzduff & O'Hagan, 2009). Data from the 2011 census shows that Northern Ireland is now a society made up of minorities in which 45% of the resident population self-identify as Catholic and 48% self-identify as Protestant. While Catholics are traditionally viewed as the disadvantaged (and sometimes minority) group, who constitutes a majority or minority in Northern Ireland is often contested. Some argue that

both Catholics and Protestants are a majority (Protestants in Northern Ireland and Catholics on the island of Ireland) whereas others argue that both groups represent a minority (Catholics in Northern Ireland and Protestants on the island of Ireland; e.g., Trew & Benson, 1996).

Although political leaders have signed promising agreements, the war has ended but the conflict is not over (Mac Ginty, Muldoon, & Ferguson, 2007) and Northern Ireland remains a highly segregated society. Evidence for this can be found in the number of children attending religiously segregated schools (approximately 94%; Nolan, 2013) as well as the number of segregated housing areas (35–40%; Hughes, Campbell, Hewstone, & Cairns, 2007). This segregation is problematic because research has shown that living in mixed areas (compared with segregated) is associated with lower levels of intergroup bias and reduced likelihood to engage in offensive behaviors (Schmid, Tausch, Hewstone, Hughes, & Cairns, 2008).

While negative attitudes are still dominant in society, research also shows that increasing the amount of contact between Protestants and Catholics can have positive effects. Support for this idea, even in a deeply divided society like Northern Ireland, comes from earlier anthropological studies (Harris, 1972; Leyton, 1975) and more recent social-psychological studies (Hewstone et al., 2005). Contact has also been central to policy initiatives aimed at improving community relations in Northern Ireland (Cairns & Hewstone, 2002; Hughes, 1999; Hughes & Carmichael, 1998).

Cyprus

The conflict in Cyprus goes back to the 1950s when Cyprus was still part of the British Empire. Greek Cypriots (82% of the population) began to seek a union with Greece, which was opposed by the Turkish Cypriot minority (18%) who embarked on a struggle for partition of Cyprus between Greece and Turkey. In 1960 Cyprus, gained its independence and a consociational partnership between Greek Cypriots and Turkish Cypriots was established as the Republic of Cyprus, a unitary state that joined the United Nations. The divergent national aspirations of the two communities and conflict over power sharing at the elite level led to "the troubles" of 1963–1964 in the form of violent intercommunal clashes and increased segregation as a reduction of cohabitation in more than 100 mixed villages (Lytras & Psaltis, 2011). A coup in 1974, aimed at the union of Cyprus with Greece, engineered by the Greek military junta and executed by extremist Greek Cypriot nationalists and a Greek military contingent in Cyprus, prompted a military intervention by Turkey that led to fatalities, mass executions and major displacements of the population and the division of the island into two ethnically homogeneous areas. This eventually resulted in the establishment of a breakaway state by the Turkish Cypriot leadership in the north, which is recognized only by Turkey (see Kitromilides, 1977; Papadakis, 2005).

The travel restrictions between the north and south were lifted in 2003 and about 70% of the population from both communities have visited the other side at least once (Psaltis, 2016). A number of studies, in both communities and with various age groups, exploring direct and extended contact effects in Cyprus clearly shows that contact reduces prejudice and promotes intergroup trust (Psaltis, 2016, 2012; Tausch et al., 2010) but nevertheless the quantity of contact in Cyprus is rather low because of high levels of geographical separation. For these reasons, other researchers have explored more indirect forms of contact as a means to promote relations between members of the two communities (e.g., imagined contact; Husnu & Crisp, 2010). Given this complexity of both internal and external dynamics, who is majority and minority in the case of the Cyprus issue is often also contested in the two communities. Both the 1960 constitution of the Republic of Cyprus and the constitutional arrangements discussed under the United Nation's auspices today for an establishment of a Federation refer to the Turkish Cypriot community as a coconstitutive and politically equal community and not a minority. Our use of the term minority and majority in this article is premised only on the numerical inequality between the two communities.

A particularly relevant feature in highly segregated societies is that cross-community contact could itself become politicized. For example, in Cyprus a number of mostly Greek Cypriot small political parties oppose crossing to the other side, moralizing such an act as offering support to the internationally nonrecognized state in the north (Demetriou, 2007). For this reason, about one-third of Greek Cypriots today have never crossed to the north and a large percentage has crossed just once or twice, visiting occupied properties by the Turkish army or churches and monasteries but then never crossing again. This is directly relevant to the focus of the current study as it underlines the importance of these rather rare opportunities for contact to be of good quality; thus, leading to an increased will for future contact as an important outcome for dismantling segregation.

The Present Study

Based on previous research that has examined the importance of intergroup quality over quantity and that which demonstrates the relationship between contact, intergroup trust, outgroup evaluation, and future contact intentions, we hypothesized that intergroup contact quality, more than quantity, would be associated with higher levels of intergroup trust and more positive attitudes and increased future contact intentions. Given the asymmetric pattern of stigmatization of contact in the two communities in Cyprus and the numerical inequality between the two communities we further expected differences in both the quantity and quality of contact between the two communities in Cyprus. We did not predict that these differences would be observed in Northern Ireland because of the lower levels of segregation and the fact that a political settlement has been in place for some years now.

Method

Sample

Participants were recruited using word of mouth, leaflets, and advertising through social media during the Spring/Summer time in 2013. In Northern Ireland, the sample comprised 268 participants (83 men, 185 women) with a mean age of 35.92 (SD = 11.59) of which 143 self-identified as Protestant and 125 self-identified as Catholic. In Cyprus, the sample comprised 408 participants (139 men, 264 women, and 5 who did not state any sex) with a mean age of 26.85 (SD = 10.46), of which 271 self-identified as Greek Cypriot and 137 self-identified as Turkish Cypriot.

This document is copyrighted by the American Psychological Association or one of its allied publishers.
This article is intended solely for the personal use of the individual user and is not to be disseminated broadly.

This document is copyrighted by the American Psychological Association or one of its allied publishers.
This article is intended solely for the personal use of the individual user and is not to be disseminated broadly.

Measures

The same measures were used in each context, Northern Ireland and Cyprus. In Cyprus, the questionnaires were translated and back-translated from English to both Greek and Turkish. The measures were presented in the order detailed below. Scale reliabilities are presented separately for each group.

Quantity and quality of contact. Quantity of contact was measured using three items adapted from Voci and Hewstone (2003). Participants were asked to rate on a 5-point Likert scale (*not at all* to *very often*) how much contact they have with those from the other community: at work school or college, in the neighborhood where they live, over all social situations. A high score indicated high levels of intergroup contact. The scale was found to be reliable for all groups (α = .62 Greek Cypriots, α = .70 Turkish Cypriots, α = .64 Protestants, α = .75 Catholics).

Also adapted from Voci and Hewstone (2003), quality of intergroup contact was measured with four items using a 5-point Likert scale (*not at all* to *very much*). Participants were asked to rate how they find the contact when they meet outgroup members. This included: pleasant, in cooperative spirit, positive, and based on mutual respect. A high score indicated better quality contact (α = .94 Greek Cypriots, α = .89 Turkish Cypriots, α = .93 Protestants, α = .93 Catholics).

Outgroup evaluation. Using the general evaluation scale by Wright, Aron, McLaughlin-Volpe, and Ropp (1997), participants were asked to rate their feelings about the other community. They were given six pairs of opposing adjectives (warm-cold, negative-positive, friendly hostile, suspicious-trusting, respect-contempt, and admiration-disgust), and asked to rate from 1 to 7 their views of the other group (α = .95 Greek Cypriots, α = .92 Turkish Cypriots, α = .94 Protestants, α = .92 Catholics). In each pair presented above, 1 represents the first adjective and 7 represents the second adjective.

Future contact intentions. This was measured using a three item 5-point Likert scale (*strongly disagree* to *strongly agree*). Participants were asked to rate the extent to which they agreed with the following statements: "I would like to know more about the other community," "In general I would like to have more contact with the other community," and "I would like to have more friends from the other community." A high score indicated increased future contact intentions (α = .93 Greek Cypriots, α = .91 Turkish Cypriots, α = .94 Protestants, α = .89 Catholics). In Northern Ireland, participants were instructed that "other community" refers to the community with which they do not identify in their given context (e.g., Protestant or Catholic). In Cyprus, given that there was a Greek and Turkish language version in the place of "the other community" Greek Cypriots would read "Turkish Cypriots" and Turkish Cypriots would read "Greek Cypriots."

Intergroup trust. Adapted from Tam et al. (2009), intergroup trust was measured using a four item 5-point Likert scale (*strongly disagree* to *strongly agree*). Participants were asked to rate the extent to which they agreed with the following statements: "I just do not trust the other community (reverse coded)," "I trust the other community when they say they love (Cyprus/Northern Ireland)," "I trust ordinary people of the other community when they say they want peace," and "I trust politicians representing the other community when they say they want peace." A high score indicated increased trust (α = .77 Greek Cypriots, α = .63 Turkish Cypriots, α = .67 Protestants, α = .59 Catholics).

Procedure

Following ethical approval, the survey was set up using online software host SurveyMonkey. The study was advertised online, through email and social networking as well as through door to door leaflets. Participants were provided with an information sheet that at the end informed them that by clicking continue, they were consenting to take part in the study. After completion of the questions, participants were provided with a debrief form outlining how to withdraw or follow-up the study results.

Results

Data collected from both contexts were combined into one data set for analysis. We conducted analysis separately for each group, given the complex nature of interactions in both locations and the additional influencing effects of group status. It was hypothesized that contact quality, more than quantity, would be associated with increased intergroup trust although it was expected that both quantity and quality of contact would predict outgroup evaluation and future contact intentions. In addition, it was predicted that the contact quality to future contact relationship and the contact quality to outgroup evaluation relationship would be mediated by intergroup trust but not the quantity of contact to future contact and the quantity of contact to outgroup evaluation relationship. To test these hypotheses, a series of correlations were examined followed by Structural Equation Modeling to test direct and indirect effects of quality and quantity of contact on both outcomes (future contact intentions and outgroup evaluation).

Preliminary Data Analyses

Correlations between quantity of contact, quality of contact, intergroup trust, future contact intention, and outgroup evaluations were examined separately for the two groups within each of the two locations, Northern Ireland (Protestants and Catholics) and Cyprus (Turkish Cypriots and Greek Cypriots; see Table 1). For all groups, contact quality was significantly positively correlated with intergroup trust, future contact intentions, and outgroup evaluation.

It was also evident from the large differences between the means of quantity of contact in Northern Ireland and Cyprus that Cyprus offered much less opportunity for contact compared with Northern Ireland, which was expected given the geographical separation between north and south in Cyprus. In particular, for Northern Ireland the mean for quantity (M = 3.66, SD = 0.87) was significantly higher to the midpoint of the scale representing "sometimes" $t(142) = 9.10$, $p < .001$ closer to 4 representing "often." The same was true for Catholics (M = 3.93, SD = 0.96), $t(124) = 10.75$, $p < .001$. On the contrary, in Cyprus both in the Greek Cypriot (M = 1.74, SD = 0.70) and Turkish Cypriot (M = 1.98, SD = 0.85) community the mean of contact was significantly lower than the midpoint of the scale closer to the value 2 that represented "rarely."

Structural Equation Modeling

Using AMOS 20.0 (Arbuckle, 2006), we tested a Structural Equation Model (SEM) with latent variables (MacCallum & Aus-

Table 1
Correlations and Descriptive Statistics in Each Context

	Quantity	Quality	Trust	OG evaluation	Future
PROT					
Quantity	1				
Quality	.407**	1			
Trust	.330**	.680**	1		
OG evaluation	.396**	.778**	.663**	1	
Future	.149	.488**	.442**	.470**	1
Mean	3.66	3.78	3.44	4.93	3.19
SD	.87	.93	.82	1.25	.83
CATH					
Quantity	1				
Quality	.385**	1			
Trust	.313**	.497**	1		
OG evaluation	.331**	.610**	.556**	1	
Future	.103	.385**	.420**	.402**	1
Mean	3.93	3.90	3.69	5.03	3.37
SD	.96	.88	.65	1.14	.74
GC					
Quantity	1				
Quality	.401**	1			
Trust	.335**	.723**	1		
OG evaluation	.364**	.779**	.811**	1	
Future	.290**	.755**	.786**	.795**	1
Mean	1.74	3.08	3.15	4.19	3.43
SD	.70	1.07	.85	1.41	1.04
TC					
Quantity	1				
Quality	.374*	1			
Trust	.218*	.536**	1		
OG evaluation	.261*	.660**	.700**	1	
Future	.384**	.539**	.619**	.612**	1
Mean	1.98	2.86	3.04	4.20	3.52
SD	.85	.90	.80	1.42	1.08

Note. CATH = Catholic; PROT = Protestant; GC = Greek Cypriot; TC = Turkish Cypriot; OG = outgroup.
* $p < .05$. ** $p < .01$.

This document is copyrighted by the American Psychological Association or one of its allied publishers.
This article is intended solely for the personal use of the individual user and is not to be disseminated broadly.

tin, 2000) separately for each group. We first tested a structural model, separately for each group within each location, which proposed that any effect of quality, more than quantity of contact on positive outgroup evaluation and intention to have future contact with outgroupers would be fully mediated by intergroup trust. To assess overall model fit, we used the χ^2 test, the comparative fit index (CFI), the root mean square error of approximation (RMSEA), and the standardized root-mean-square residual (SRMR). A satisfactory fit is generally indicated by a χ^2/df ratio ≤ 3, a CFI $> .95$, an RMSEA $\leq .08$, and an SRMR $\leq .08$ (Hu & Bentler, 1999; Voci & Hewstone, 2003).

Northern Ireland

The model fit for Protestants was good, ($\chi^2(163) = 253{,}85$, $p < .001$; $\chi^2/df = 1.55$, CFI = .96, RMSEA = .06, and SRMR = .05). As predicted, Protestants who had higher levels of intergroup contact ($\beta = 0.16$, $p < .05$) and especially that of better quality ($\beta = 0.82$, $p < .001$) were more likely to trust Catholics. Moreover, Protestants who trusted Catholics more were more likely to evaluate Catholics more positively ($\beta = 0.89$ $p < .001$) and were more intent on engaging in future contact with Catholics ($\beta = 0.56$, $p < .001$). The standardized indirect effect of quality of contact on outgroup evaluation through intergroup trust was significant ($\beta = .73$, $p = .01$, Lower BC = .59, Upper BC = .98) as was the indirect effect of quantity of contact on outgroup evaluation through intergroup trust ($\beta = .14$, $p = .04$, Lower BC = .02, Upper BC = .88). The standardized indirect effects of quality of contact on future contact through intergroup trust was also significant ($\beta = .46$, $p = .01$, Lower BC = .19, Upper BC = .48) as was the indirect effect of quantity of contact on future contact intentions through intergroup trust ($\beta = .09$, $p = .04$, Lower BC = .01, Upper BC = .36). The model explained 80% of the variance in outgroup evaluation and 32% of the variance in future contact intentions. There was a significant correlation between contact quality and contact quantity ($r = .53$, $p < .001$) while the correlation between outgroup evaluation and future contact intentions was not significant ($r = -.05$, ns).

The model fit for Catholics was also good, ($\chi^2(163) = 201.01$, $p < .05$; $\chi^2/df = 1.23$, CFI = .97, RMSEA = .04, and SRMR = .06). Catholics who had better quality intergroup contact ($\beta = .72$, $p < .0001$) were more likely to trust Protestants more; however, this time quantity of contact was unrelated to intergroup trust ($\beta = .15$, $p = .12$). Moreover, Catholics who trusted Protestants more were more likely to evaluate Protestants more positively ($\beta = .82$ $p < .001$) and were more ready to engage in future contact with Protestants ($\beta = .54$, $p < .001$). The standardized indirect effect of

quality of contact on outgroup evaluation through intergroup trust was significant ($\beta = .58$, $p = .01$, Lower BC = .43, Upper BC = .73) while the indirect effect of quantity of contact on outgroup evaluation through intergroup trust was nonsignificant ($\beta = .12$, $p = .19$, Lower BC = −.06, Upper BC = .33). The standardized indirect effects of quality of contact on future contact intentions through trust was also significant ($\beta = .39$, $p = .01$, Lower BC = .22, Upper BC = .56) while the indirect effect of quantity of contact on future contact intentions through intergroup trust was nonsignificant ($\beta = .08$, $p = .19$, Lower BC = −.04, Upper BC = .20). The model explained 67% of the variance in outgroup evaluation and 29% of the variance in future contact tendencies. The correlation between the contact quality and contact quantity was significant ($r = .46$, $p < .001$) while the correlation between outgroup evaluation and future contact intention was not significant ($r = -.02$, ns).

Cyprus

The model fit for Greek Cypriots was good, ($\chi^2(163) = 384.25$, $p < .001$; $\chi^2/df = 2.36$, CFI = .96, RMSEA = .07, and SRMR = .05). Greek Cypriots who had better quality contact ($\beta = .84$, $p < .0001$) were more likely to trust Turkish Cypriots more. As in the case of Catholics, quantity of contact was unrelated to trust ($\beta = .05$, ns). Moreover, Greek Cypriots who trusted Turkish Cypriots more were more likely to evaluate Turkish Cypriots more positively ($\beta = 0.95$ $p < .001$) and were more ready to engage in contact in the future with Turkish Cypriots ($\beta = 0.91$, $p < .001$). The standardized indirect effect of quality of contact on outgroup evaluation through intergroup trust was significant ($\beta = .80$, $p = .01$, Lower BC = .69, Upper BC = .87) while the indirect effect of quantity of contact on outgroup evaluation through intergroup trust was not significant ($\beta = .04$, $p = .42$, Lower BC = −.04, Upper BC = .17). The standardized indirect effect of quality of contact on future contact intentions through intergroup trust was also significant ($\beta = .77$, $p = .01$, Lower BC = .65, Upper BC = .87) while the indirect effect of quantity of contact on future contact intentions through intergroup trust was nonsignificant ($\beta = .04$, $p = .42$, Lower BC = −.04, Upper BC = .16). The model explained 90% of the variance in outgroup evaluation and 83% of the variance in future contact intentions. The correlation between contact quality and contact quantity was significant ($r = .56$, $p < .001$) while the correlation between outgroup evaluation and future contact intentions was not significant ($r = -.24$, ns).

The model fit for Turkish Cypriots showed acceptable fit indices and fit indices that marginally failed the conventional thresholds, ($\chi^2(163) = 333.28$, $p < .001$; $\chi^2/df = 2.04$, CFI = .90; RMSEA = .088 and SRMR = .076). Turkish Cypriots who had better quality contact ($\beta = .83$, $p < .0001$) were more likely to trust Greek Cypriots. As in the case of Catholics and Greek Cypriots, quantity of contact was unrelated to intergroup trust ($\beta = .04$, ns). Moreover, Turkish Cypriots who trusted Greek Cypriots more were more likely to evaluate Greek Cypriots more positively ($\beta = 0.87$, $p < .001$) and be more ready to engage in contact in the future with Greek Cypriots ($\beta = 0.84$, $p < .001$). The standardized indirect effect of quality of contact on outgroup evaluation through intergroup trust was significant ($\beta = .72$, $p = .01$, Lower BC = .49, Upper BC = .89) while the indirect effect of quantity of contact on outgroup evaluation through trust was not significant ($\beta = .04$, $p = .73$, Lower BC = −.14, Upper BC = .23). The standardized indirect effects of quality of contact on future contact intentions through intergroup trust was significant ($\beta = .70$, $p = .01$, Lower BC = .54, Upper BC = .81) while the indirect effect of quantity of contact on future contact intentions through intergroup trust was not significant ($\beta = .04$, $p = .73$, Lower BC = −.11, Upper BC = .22). The model explained 75% of the variance in outgroup evaluation and 70% of the variance in future contact tendencies. The correlation between contact quality and contact quantity was significant ($r = .57$, $p < .001$) as was the correlation between outgroup evaluation and future contact intentions ($r = -.36$, $p < .01$).

It is worth noting that the modification indices suggested the existence of significant direct paths from quality of contact to outgroup evaluation and quantity of contact to future contact intentions. The modified model for Turkish Cypriots showed a somewhat improved fit, ($\chi^2(161) = 320.01$, $p < .001$; $\chi^2/df = 1.98$, CFI = .91; RMSEA = .085 and SRMR = .076). In this model (Figure 2), Turkish Cypriots who had better quality contact were more likely to trust Greek Cypriots more ($\beta = .71$, $p < .0001$). Quantity of contact was unrelated to intergroup trust ($\beta = .02$, ns). Moreover, Turkish Cypriots who trusted Greek Cypriots more were more likely to evaluate Greek Cypriots more positively ($\beta = 0.33$, $p < .001$) and be more ready to engage in contact in the future with Greek Cypriots ($\beta = 0.81$, $p < .001$). The standardized indirect effect of quality of contact on outgroup evaluation through intergroup trust was not significant ($\beta = .23$, $p = .072$, Lower BC = −.02, Upper BC = .70) nor was the indirect effect of quantity of contact on outgroup evaluation through intergroup trust ($\beta = .01$, $p = .98$, Lower BC = −.13, Upper BC = .11). The standardized indirect effects of quality of contact on future contact intentions through intergroup trust was significant ($\beta = .58$, $p = .01$, Lower BC = .39, Upper BC = .75) while the indirect effect of quantity of contact on future contact intentions through intergroup trust was not significant ($\beta = .02$, $p = 1.00$, Lower BC = −.16, Upper BC = .23). The direct effect from quality of contact on outgroup evaluation was significant ($\beta = .57$, $p = .02$, Lower BC = .15, Upper BC = .82) as was the direct effect of quantity of contact on future contact intentions ($\beta = .19$, $p = .04$, Lower BC = .01, Upper BC = .36).

The model explained 71% of the variance in outgroup evaluation and 82% of the variance in future contact intentions. The correlation between contact quality and contact quantity was significant ($r = .56$, $p < .001$) and the correlation between outgroup evaluation and intergroup trust was nonsignificant ($r = -0.1$, ns).

Invariance Testing Within Northern Ireland and Cyprus

We also examined the measurement invariance across the two communities in each setting (Northern Ireland and Cyprus) using multiple group analysis.

Northern Ireland. In a first step we estimated the combined unconstrained model of Figure 1 as a baseline model for comparisons with more constrained models. Fit indices were very good ($\chi^2(326) = 454.84$, $p < .001$; $\chi^2/df = 1.39$, CFI = .96; RMSEA = .039, and SRMR = .054). In a second step we compared the unconstrained model with Model 1 where measurement weights constrained to equality across both Protestants and Catholics.

This document is copyrighted by the American Psychological Association or one of its allied publishers.
This article is intended solely for the personal use of the individual user and is not to be disseminated broadly.

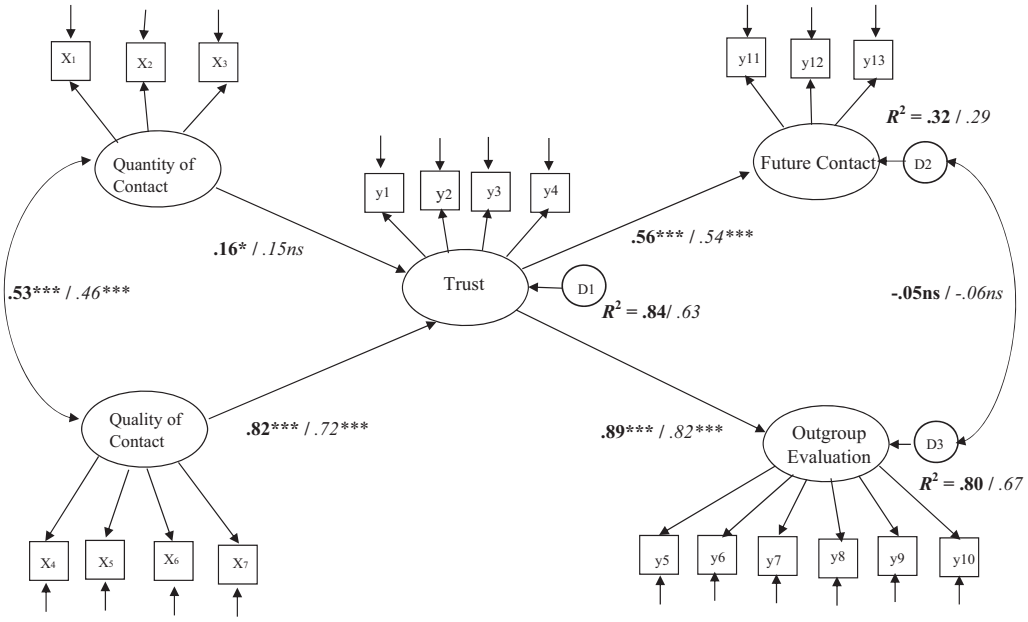

Figure 1. Structural equation model of Quantity and Quality of contact, Outgroup trust, and Outgroup evaluation and Future contact tendencies in Northern Ireland for Protestants (bold) and Catholics (italics). Error terms y2 and y4 were correlated. * $p < .05$. *** $p < .001$.

These two models (baseline vs. Model 1) were compared with one another using a scaled χ^2 difference test (Satorra & Bentler, 1999). The model specifying metric invariance (i.e., where the factor loadings were constrained to equality) across both samples showed good model fit, $\chi^2(341) = 476.04$, $p < .001$; CFI = .96, RMSEA = .038, and SRMR = .059, and did not show a significantly worse fit than the baseline model specifying freely estimated parameters. In a second step (Model 2) a measurement intercepts model was also estimated where the intercepts of the observed items were additionally constrained to equality. This model also showed very good

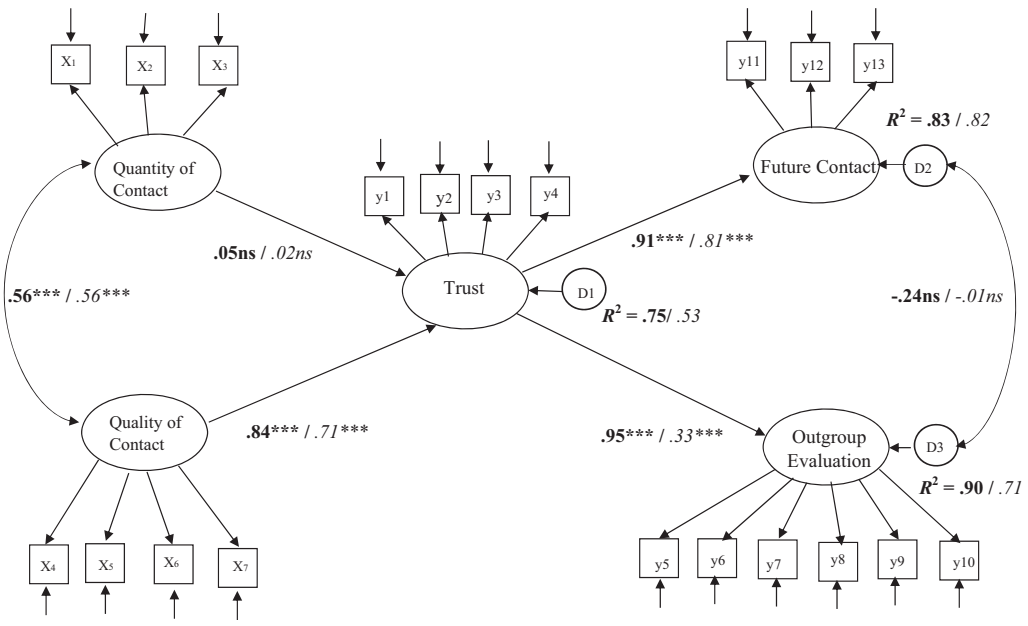

Figure 2. Structural equation model of Quantity and Quality of contact, Outgroup trust, and Outgroup evaluation and Future contact tendencies in Northern Ireland for Greek Cypriots (bold) and Turkish Cypriots (italics). Additional path for Turkish Cypriots: Quantity of Contact – Future Contact is .19* and Quality of Contact-Outgroup Evaluation is .57*. * $p < .05$. *** $p < .001$.

This document is copyrighted by the American Psychological Association or one of its allied publishers.
This article is intended solely for the personal use of the individual user and is not to be disseminated broadly.

fit $\chi^2(361) = 501.78$, $p < .001$; CFI = .96, RMSEA = .039, and SRMR = .059. In a final step (Model 3) we additionally constrained to equality the four paths between the latent variables. Model fit was still very good $\chi^2(365) = 511.96$, $p < .001$; CFI = .96, RMSEA = .039, and SRMR = .065 but was a significantly worse fit compared with the baseline model, $\Delta\chi^2(39) = 57.11$, $p = .031$. However, in the case that the path from quality of contact to trust was allowed to be freely estimated the comparison of the model fit with the baseline model was no longer significantly different, $\Delta\chi^2(38) = 47.86$, $p = .13$. As suggested by pairwise comparisons of parameters (CR = 2.22), the path for Protestants ($\beta = .81$) was significantly higher compared with the path for Catholics ($\beta = .56$). The achievement of metric invariance allowed for direct comparisons between Protestants and Catholics on all variables of Table 1. Independent samples *t* test revealed significant differences only for the quantity of contact and Trust. In particular, the mean of quantity of contact for Protestants ($M = 3.66$, $SD = 0.87$) was significantly lower compared with the score of Catholics ($M = 3.93$, $SD = 0.96$), $t(266) = -2.37$, $p = .02$. Also, the mean of trust for Protestants ($M = 3.44$, $SD = 0.82$) was significantly lower compared with the score of Catholics, ($M = 3.69$, $SD = 0.65$), $t(266) = -2.72$, $p = .01$.

Cyprus. In a first step we also estimated the combined unconstrained model of Figure 1 as a baseline model for comparisons with more constrained models. Fit indices were good ($\chi^2(343) = 756.54$, $p < .001$; $\chi^2/df = 2.20$; CFI = .94, RMSEA = .055, and SRMR = .048). In a second step we compared the unconstrained model with Model 1 where measurement weights were constrained to equality across both Greek Cypriots and Turkish Cypriots. These two models (baseline vs. Model 1) were compared with one another using a scaled χ^2 difference test (Satorra & Bentler, 1999). The model specifying metric invariance (i.e., where the factor loadings were constrained to equality) also had a good fit to the data, $\chi^2(341) = 476.04$, $p < .001$; CFI = .94, RMSEA = .054, and SRMR = .054, but a significantly worse fit to the data compared with the unconstrained model $\Delta\chi^2(15) = 27.84$, $p = .023$. Similarly, the measurement intercepts model also had a significantly worse fit compared with the unconstrained model $\Delta\chi^2(35) = 189.18$, $p < .001$. Given that metric invariance was not achieved and since comparing structural paths in SEM requires at least metric invariance (Byrne, Shavelson, & Muthén, 1989) we did not proceed further with the comparison of structural weights between the two communities in Cyprus. Differences between means of variables on Table 1 between Greek Cypriots and Turkish Cypriots could thus not be reliably estimated.

Alternative Model

Although the hypothesized model was found to fit the data well for 3 out of 4 groups (less so for Turkish Cypriots), we tested an alternative to the original causal order. In the alternative model, we allowed for the possibility that intergroup quantity and quality of contact were the more proximal predictors of future contact intentions and outgroup evaluation with intergroup trust being the exogenous variable. This model was found to fit the data well for Protestants ($\chi^2(162) = 265.09$, $p < .001$; $\chi^2/df = 1.63$, CFI = .95, RMSEA = .067, and SRMR = .06). However, a comparison of the Bayesian Information Criterion (BIC) and consistent Akaike's information criterion (CAIC) indices between the corresponding original model and the alternative for Protestants showed that both indices were lower for the original (BIC = 482.60, CAIC = 528.60) compared with the alternative model (BIC = 503.31, CAIC = 551.31).

The alternative model fit for Catholics was also good, ($\chi^2(162) = 218.82$, $p < .05$; $\chi^2/df = 1.35$; CFI = .96, RMSEA = .053, and SRMR = .07). Again, however, a comparison of the BIC and CAIC indices between the corresponding original model and the alternative for Catholics again showed that both indices were lower for the original (BIC = 424.64, CAIC = 470.64) compared with the alternative model (BIC = 450.58, CAIC = 498.58).

The alternative model fit for Greek Cypriots was marginal for some fit indices and unacceptable for other since the RMSEA index was higher than 0.80, ($\chi^2(162) = 484.97$, $p < .05$; $\chi^2/df = 2.99$; CFI = .93, RMSEA = .086, and SRMR = .07). A comparison of the BIC and CAIC indices between the corresponding original model and the alternative for Greek Cypriots also showed that both indices were lower for the original (BIC = 642.78, CAIC = 688.78) compared with the alternative model (BIC = 753.87, CAIC = 801.87).

The alternative model fit for Turkish Cypriots again showed unacceptable fit, ($\chi^2(162) = 367.31$, $p < .001$; $\chi^2/df = 2.26$; CFI = .88, RMSEA = .097, and SRMR = .10). A comparison of the BIC and CAIC indices between the corresponding original model and the alternative for Turkish Cypriots again showed that both indices were lower for the original (BIC = 586.31, CAIC = 632.31) compared with the alternative model (BIC = 603.47, CAIC = 651.47). All in all, the testing of alternative models indicated that alternative models showed worse fit compared with the original models.

Finally, we tested a second alternative model. For example, one could claim that desire for future contact is predicted by outgroup evaluation; thus, making outgroup evaluation a second mediator of the relationship between contact and future contact intentions. This model also had significant worse fit according to both BIC and CAIC for all communities except the Turkish Cypriot community where this alternative model did not show worse fit compared with the final model tested in the Turkish Cypriot community. It is worth noting that in all four communities tested with this alternative model trust but not outgroup evaluation was working as a possible mediator of future contact intentions.

Discussion

Conflict and segregation are pervasive societal issues and one way to help work toward building peace is through encouraging intergroup contact between the competing groups (Christie, 2006). Doing so under favorable conditions can promote more positive intergroup attitudes and encourage cooperation and trust. Through this research, we aimed to understand how positive contact can build up intergroup trust that will in turn promote more favorable affective and behavioral responses. In doing so, we argue that future contact intentions is a behavioral intention outcome distinct from attitude change and of particular relevance for segregated contexts. To do so, we examined contact quality, intergroup trust, outgroup evaluation, and future contact intentions in two conflict settings characteristic for their high levels of segregation; among Protestants and Catholics in Northern Ireland, and Greek Cypriots and Turkish Cypriots in Cyprus. We hypothesized that intergroup

This document is copyrighted by the American Psychological Association or one of its allied publishers.
This article is intended solely for the personal use of the individual user and is not to be disseminated broadly.

contact quality, more than quantity would be associated with increased intergroup trust and increased future contact intentions and more positive outgroup evaluation. We further hypothesized, based on previous research (Tam et al., 2009) that trust would fully mediate the relationship between contact quality and future contact intentions and the evidence from three out of four groups (Protestants, Catholics, and Greek Cypriots) is indeed supportive of this model.

First, we found that when controlling for quantity of contact high quality contact predicts increased future contact intentions, fully mediated through increased intergroup trust. This was observed in both communities in Northern Ireland and the Greek Cypriot community in Cyprus. This supports the importance of encouraging intergroup contact as a means to build intergroup trust and future intergroup interactions in segregated contexts. It also supports previous research in Northern Ireland (Tam et al., 2009) and work that has used imagined contact (Vezzali et al., 2012) to demonstrate the mediating effect of trust on affective and behavioral responses. This finding is important because the mediating role of trust is vital in conflict resolution (Nadler & Liviatan, 2006) and is associated with increased cooperation (Tam et al., 2009) and likelihood to forgive outgroup members (Cehajic et al., 2008). Our findings support the idea that increased trust is an important mechanism of changing behavioral tendencies, and particularly of future contact intentions. This suggests that quality contact is important in enabling an increase in intergroup trust and thereby encouraging future interactions and sustained positive contact that may help to further dismantle the infrastructures of segregation.

We found indirect effects, through intergroup trust, supporting the effects of contact quality above and beyond quantity of contact on outgroup evaluation and future contact intentions. This is particularly important as it supports that high quality contact is more important in promoting intergroup relations over and above quantity of contact. It also supports previous research on the importance of contact quality over quantity (Binder et al., 2009; Plant & Devine, 2003). Nevertheless, for at least one of our groups (namely Turkish Cypriots) we found that quality of contact retained a direct relationship with outgroup evaluation, suggesting that for this specific group good quality contact might lead to prejudice reduction without necessarily changing their trust levels. Our findings also suggest that for Turkish Cypriots there is reliable direct effect from quantity of contact to future intentions of contact. This may be because the function of contact could differ for minority members. For example, Hagendoorn, Drogendijk, Tumanov, and Hraba (1998) argue that status enhancement may be a motivation for contact among minority group members. Further, there is evidence to suggest that group status can play an important role in contact experiences such that contact has been found to work less well for minority group members (Tropp & Pettigrew, 2005). In the Cypriot context, Turkish Cypriots represent a numerical (albeit not political) minority and we see in Figure 2 that for some Turkish Cypriots even good quality contact can lead to prejudice reduction but not trust. Further, some Turkish Cypriots cross to the south of the island in the Greek Cypriot society out of necessity to work or just for shopping without having the opportunity for more than a superficial contact at the counter of a shopping mall. Such contact is often of neutral quality that does not necessarily built trust. Despite this, it is still likely that these contact opportunities enhance more positive outgroup evaluation and increase the chances of repeating future visits to the south in the Greek Cypriot community.

The testing of the first alternative model (selection bias) suggested that they are less plausible than the original ones, but still cannot be clearly rejected given the acceptable fit indices for the Protestants, Catholics, and Greek Cypriots with the exception of the first alternative model for Turkish Cypriots that was clearly not acceptable. Given the less selective nature of crossing from north to south by Turkish Cypriots in Cyprus, the findings make sense. In line with this interpretation the second alternative model could not be rejected in the Turkish Cypriot community suggesting that quality contact can lead to both intergroup trust and positive outgroup evaluation without the latter necessarily leading to future contact intentions. Indeed, given the selection of housing arrangements along communal lines in Northern Ireland and the moral penalization of crossing to the other community in Cyprus for the Greek Cypriot (but not the Turkish Cypriot community; Demetriou, 2007) our inability to clearly reject the alternative selection bias hypothesis in these three communities should not come as a surprise.

Practical Implications

In addition to demonstrating the value of contact quality over contact quantity, this research is important for understanding and promoting the movement toward peace in both Northern Ireland and Cyprus. In particular, our findings highlight the need for initiatives that support and promote high quality intergroup contact to break down the barriers of segregation. This is important because cuts in government funding in Northern Ireland means that targeted intergroup contact interventions (such as cross-community contact schemes) are reducing in number. Therefore, initiatives that aim to develop and promote shared space are increasingly important. This is imperative as Northern Ireland is arguably more segregated now than it was before the signing of the 1998 Peace Agreement (Shirlow & Murtagh, 2006) and, therefore, promoting shared space is increasingly important. We also recognize that shared space does not always lead to meaningful interactions (McKeown, Cairns, & Stringer, 2012) and as such, initiatives need to go beyond physical copresence and ensure high quality intergroup contact. For example, interventions should aim to focus on promoting the four key conditions of intergroup contact (equal status, common goals, cooperation, and authority support) to reduce prejudice and better promote community relations. This will also ensure that contact is of higher quality.

In the case of Cyprus, where geographical segregation is still at its maximum, the present findings suggest that the decisions of international funding agencies like UNDP-ACT to assume that after the checkpoints opening in 2003 contacts will find their own way without further need for planned and funded contact schemes was a grave mistake. In Cyprus there is clearly a need to increase both the volume and quality of intergroup contact. Our findings also point to the need to de-politicize crossing over to the "other" side, which is one of the major issues in Cyprus and specifically in the Greek Cypriot community. Because of complete geographical separation and the stigmatization of crossing to the Turkish Cypriot community, by some Greek Cypriot political parties, the intention for future contact is becoming an increasingly important outcome. This is evidenced by the significant number of people,

This document is copyrighted by the American Psychological Association or one of its allied publishers.
This article is intended solely for the personal use of the individual user and is not to be disseminated broadly.

mostly in the Greek Cypriot community, who have never crossed to the other side or crossed once or twice to see properties and places of religious worship but never crossed again (Lytras & Psaltis, 2011). Under these circumstances, and given the present findings it is certainly worth investing on educational policies in both communities that aim to maximize the quality of contact between members of the two communities on a massive scale, either through contact schemes between educational institutions, presently lacking, or the establishment of integrated schools.

Limitations and Future Research Directions

While our research has produced notable and mostly consistent findings among three out of four groups and in two different conflict settings, it is important to acknowledge the limitations of our studies. In particular, we are limited in what we can conclude from our survey data. This is because we are measuring self-reported experiences and behavior intentions rather than actual behaviors. This is problematic when trying to understand complex human processes. Our sample was also self-selecting meaning that it is likely that we have not captured the full range of attitudes associated with the wider community in both contexts, especially older people. Ongoing research suggests that in at least two representative sample surveys in the Turkish Cypriot community and a representative study of the only mixed village in Cyprus, Pyla, both quantity and quality of contact retain significant links with intergroup trust (Psaltis, Ioannou, & Ioannou, 2017) when tested as predictors of intergroup trust at the same time. It is possible that for older Turkish Cypriots, who were mostly absent from this study, who have rather negative memories of cohabitation with Greek Cypriots (Psaltis, 2016) repeated contacts, irrespective of their quality proves to them that coexistence is possible today and that they can trust Greek Cypriots again. Moreover, we have focused our study on three key variables (contact, intergroup trust, and future contact intentions) that makes it difficult to understand other processes that may moderate or mediate these effects, such as identity strength, identification with superordinate identity and empathy. Despite these limitations we find consistent results over two distinct conflict ridden contexts characteristic for their substantial segregation. This goes beyond the often relied upon laboratory studies using fictitious groups.

Future research should take into consideration the complexities of promoting group relations in conflict settings. Given our finding, that our model worked less well for Turkish Cypriots, it would be useful to further examine how intergroup contact is related to trust and other processes such as superordinate identity and how this differs for majority and minority group members (see Dixon, Cakal, Khan, Osmany, & Majumdar, in press). In the context of Northern Ireland, where group status is highly contested, this would be interesting to understand these processes in relation to perceptions of relative group status. From a methods perspective, it would be beneficial in future research to understand how self-report behaviors translate into intergroup interactions and, therefore, we suggest that a behavioral measure (as opposed to behavioral intention) would add richness to understanding this complex relationship. Moreover, moving beyond contact measures and focusing on friendships using a social network analysis approach would allow a more detailed analysis of the role of friendship formation in trust and reconciliation processes. Finally, in the two particular contexts studied here it would also be important to further explore as outcome measures the levels of acceptance or rejection of policies that would further enhance desegregation.

Conclusions

Our findings show that through higher levels of intergroup trust, quality contact (above contact quantity) is associated with higher levels of future contact intentions for Protestants and Catholics in Northern Ireland and for Greek Cypriots and Turkish Cypriots in Cyprus. We believe that our findings have important implications for future research on the relationship between intergroup trust and intergroup contact as they point toward the existence of a spiral of contact leading to further support for contact, through the mediating role of trust, in contexts of high segregation where intergroup contact itself is politicized. In such contexts, segregation tends to become self-sustaining by diminishing the opportunities for contact and it is important to unearth the mechanisms that could unlock support for and intentions for increased contact.

References

Allport, G. A. (1954). *The nature of prejudice*. Reading, MA: Addison-Wesley.

Arbuckle, J. L. (2006). Amos (Version 20.0) [Computer Program]. Chicago, IL: SPSS.

Barlow, F. K., Louis, W. R., & Hewstone, M. (2009). Rejected! Cognitions of rejection and intergroup anxiety as mediators of the impact of cross-group friendships on prejudice. *British Journal of Social Psychology, 48,* 389–405. http://dx.doi.org/10.1348/014466608X387089

Binder, J., Zagefka, H., Brown, R., Funke, F., Kessler, T., Mummendey, A., . . . Leyens, J. P. (2009). Does contact reduce prejudice or does prejudice reduce contact? A longitudinal test of the contact hypothesis among majority and minority groups in three European countries. *Journal of Personality and Social Psychology, 96,* 843–856. http://dx.doi.org/10.1037/a0013470

Brewer, M. B. (1999). The psychology of prejudice: Ingroup love and outgroup hate? *Journal of Social Issues, 55,* 429–444. http://dx.doi.org/10.1111/0022-4537.00126

Byrne, B. M., Shavelson, R. J., & Muthén, B. (1989). Testing for the equivalence of factor covariance and mean structures: The issue of partial measurement invariance. *Psychological Bulletin, 105,* 456.

Cairns, E., & Hewstone, M. (2002). Northern Ireland: The impact of peacemaking in Northern Ireland on intergroup behavior. In G. Salomon & B. Neov (Eds.), *Peace education: The concept, principles and practices around the world* (pp. 217–228). Hilldale, NJ: Erlbaum.

Cehajic, S., Brown, R. J., & Castano, E. (2008). Forgive and forget. Antecedents and consequences of intergroup forgiveness in Bosnia and Herzegovina. *Political Psychology, 29,* 351–367. http://dx.doi.org/10.1111/j.1467-9221.2008.00634.x

Christie, D. J. (2006). What is peace psychology the psychology of? *Journal of Social Issues, 62,* 1–17. http://dx.doi.org/10.1111/j.1540-4560.2006.00436.x

Demetriou, O. (2007). To cross or not to cross? Subjectivization and the absent state in Cyprus. *Journal of the Royal Anthropological Institute, 13,* 987–1006. http://dx.doi.org/10.1111/j.1467-9655.2007.00468.x

Dixon, J., Cakal, H., Khan, W., Osmany, M., & Majumdar, S. (in press). Contact, political solidarity and collective action: An Indian case study of relations between historically disadvantaged communities. *Journal of Community & Applied Social Psychology*.

Dovidio, J. F., Gaertner, S. L., & Kawakami, K. (2003). Intergroup contact: The past, present, and the future. *Group Processes & Intergroup Relations, 6,* 5–21. http://dx.doi.org/10.1177/1368430203006001009

This document is copyrighted by the American Psychological Association or one of its allied publishers.
This article is intended solely for the personal use of the individual user and is not to be disseminated broadly.

Fitzduff, M., & O'Hagan, L. (2009). *The Northern Ireland Troubles: INCORE background paper*. Retrieved from http://cain.ulst.ac.uk

Hagendoorn, L., Drogendijk, R., Tumanov, S., & Hraba, J. (1998). Interethnic preferences and ethnic hierarchies in the former Soviet Union. *International Journal of Intercultural Relations, 22,* 483–503. http://dx.doi.org/10.1016/S0147-1767(98)00020-0

Hargie, O., Dickson, D., Mallett, J., & Stringer, M. (2008). Communicating social identity: A study of Catholics and Protestants in Northern Ireland. *Communication Research, 35,* 792–821. http://dx.doi.org/10.1177/0093650208324270

Harris, R. (1972). *Prejudice and tolerance in Ulster*. Manchester: Manchester University Press.

Hayes, B., & McAllister, I. (2009). Education as a mechanism for conflict resolution in Northern Ireland. *Oxford Review of Education, 35,* 437–450. http://dx.doi.org/10.1080/03054980902957796

Hewstone, M., Cairns, E., Voci, A., Hamberger, J., & Niens, U. (2006). Intergroup contact, forgiveness, and experience of "The Troubles" in Northern Ireland. *Journal of Social Issues, 62,* 99–120. http://dx.doi.org/10.1111/j.1540-4560.2006.00441.x

Hewstone, M., Cairns, E., Voci, A., Paolini, S., McLernon, F., Crisp, R., . . . Craig, J. (2005). Intergroup contact in a divided society: Challenging segregation in Northern Ireland. In D. Abrams, J. M. Marques, & M. A. Hogg (Eds.), *The social psychology of inclusion and exclusion* (pp. 265–292). Philadelphia, PA: Psychology Press.

Hewstone, M., Kenworthy, J. B., Cairns, E., Tausch, N., Hughes, J., Tam, T., . . . Pinder, C. (2008). Stepping stones to reconciliation in Northern Ireland: Intergroup contact, forgiveness, and trust. In A. Nadler, T. Malloy, & J. D. Fisher (Eds.), *The social psychology of intergroup reconciliation* (pp. 199–227). Oxford: Oxford University Press. http://dx.doi.org/10.1093/acprof:oso/9780195300314.003.0010

Hewstone, M., Lolliot, S., Swart, H., Myers, E., Voci, A., Al Ramiah, A., & Cairns, E. (2014). Intergroup contact and intergroup conflict. *Peace and Conflict, 20,* 39–53. http://dx.doi.org/10.1037/a0035582

Hu, L., & Bentler, P. M. (1999). Cutoff criteria for fit indexes in covariance structure analysis: Conventional criteria versus new alternatives. *Structural Equation Modeling, 6,* 1–55. http://dx.doi.org/10.1080/10705519909540118

Hughes, J. (1999). *Bridging the gap: Community relations policy in Northern Ireland*. Ulster Papers in Public Policy and Management, No. 87. Belfast: University of Ulster.

Hughes, J., Campbell, A., Hewstone, M., & Cairns, E. (2007). Segregation in Northern Ireland. *Policy Studies, 28,* 33–53. http://dx.doi.org/10.1080/01442870601121429

Hughes, J., & Carmichael, P. (1998). Community relations in Northern Ireland: Attitudes to contact and segregation. In G. Robinson, D. Heenan, A. M. Gray, & K. Thompson (Eds.), *Social attitudes in Northern Ireland: The Seventh Report* (pp. 1–19). Aldershot, United Kingdom: Gower.

Husnu, S., & Crisp, R. J. (2010). Imagined intergroup contact: A new technique for encouraging greater inter-ethnic contact in Cyprus. *Peace and Conflict, 16,* 97–108. http://dx.doi.org/10.1080/10781910903484776

Kitromilides, P. M. (1977). From coexistence to confrontation: The dynamics of ethnic conflict in Cyprus. In M. Attalides (Ed.), *Cyprus reviewed* (pp. 35–70). Nicosia, Cyprus: New Cyprus Association.

Kramer, R. M., & Carnevale, P. J. (2001). Trust and intergroup negotiation. In R. Brown & S. Gaertner (Eds.), *Blackwell handbook of social psychology: Volume 4. Intergroup Relations* (pp. 431–450). Oxford, United Kingdom: Blackwell Publishers.

Leyton, E. (1975). *The one blood: Kinship and class in an Irish village*. St John's, Newfoundland, Canada: ISER Books.

Lytras, E., & Psaltis, C. (2011). *Formerly mixed-villages in Cyprus: Representations of the past, present and future*. Nicosia, Cyprus: UNDP-ACT.

MacCallum, R. C., & Austin, J. T. (2000). Applications of structural equation modeling in psychological research. *Annual review of psychology, 51,* 201–226.

Mac Ginty, R., Muldoon, O., & Ferguson, N. (2007). No war, no peace: Northern Ireland after the Agreement. *Political Psychology, 28,* 1–11. http://dx.doi.org/10.1111/j.1467-9221.2007.00548.x

McKeown, S., Cairns, E., & Stringer, M. (2012). 'Is shared space really shared?'. *Journal of Shared Space, 12,* 83–93.

McKeown, S., Cairns, E., Stringer, M., & Rae, G. (2012). Micro-ecological behavior and intergroup contact. *The Journal of Social Psychology, 152,* 340–358. http://dx.doi.org/10.1080/00224545.2011.614647

Nadler, A., & Liviatan, I. (2006). Intergroup reconciliation: Effects of adversary's expressions of empathy, responsibility, and recipients' trust. *Personality and Social Psychology Bulletin, 32,* 459–470. http://dx.doi.org/10.1177/0146167205276431

Nolan, P. (2013). *Peace monitoring report. Number two*. Retrieved from http://www.community-relations.org.uk/fs/doc/NI%20Peace%20Monitoring%20Report%202013_Layout%201.pdf

Papadakis, Y. (2005). *Echoes from the dead zone: Across the Cyprus divide*. London, England: I. B. Tauris.

Pettigrew, T. F., & Tropp, L. R. (2006). A meta-analytic test of intergroup contact theory. *Journal of Personality and Social Psychology, 90,* 751–783. http://dx.doi.org/10.1037/0022-3514.90.5.751

Plant, E. A., & Devine, P. G. (2003). The antecedents and implications of interracial anxiety. *Personality and Social Psychology Bulletin, 29,* 790–801. http://dx.doi.org/10.1177/0146167203029006011

Psaltis. (2016). Collective memory, social representations of intercommunal relations, and conflict transformation in divided Cyprus. *Peace and Conflict: Journal of Peace Psychology, 22,* 19–27.

Psaltis, C. (2012). Intergroup trust and contact in transition: A social representations perspective on the Cyprus conflict. In I. Markova & A. Gillespie (Eds.), *Trust and conflict: Representations, culture and dialogue* (pp. 83–104). London, England: Routledge.

Psaltis, C., Ioannou, Ma., & Ioannou, My. (2017). *A meta-regression of intergroup contact between Greek Cypriots and Turkish Cypriots and their effects on prejudice reduction*. Manuscript in preparation.

Satorra, A., & Bentler, P. M. (2001). A scaled difference chi-square test statistic for moment structure analysis. *Psychometrika, 66,* 507–514.

Schmid, K., Tausch, N., Hewstone, M., Hughes, J., & Cairns, E. (2008). The effects of living in segregated vs. mixed areas in Northern Ireland: A simultaneous analysis of contact and threat effects in the context of micro-level neighbourhoods. *International Journal of Conflict and Violence, 2,* 56–71.

Shirlow, P., & Murtagh, B. (2006). *Belfast: Segregation, violence and the city*. London, UK: Pluto Press.

Slavin, R. (1979). Effects of biracial learning teams on cross-racial friendships. *Journal of Educational Psychology, 71,* 381–387. http://dx.doi.org/10.1037/0022-0663.71.3.381

Smeekes, A., McKeown, S., & Psaltis, C. (in press). Endorsing narratives under threat: Maintaining perceived collective continuity through the protective power of ingroup narratives in Northern Ireland and Cyprus. *Journal of Social and Political Psychology*.

Stephan, W. G., & Stephan, C. (1985). Intergroup anxiety. *Journal of Social Issues, 41,* 157–175. http://dx.doi.org/10.1111/j.1540-4560.1985.tb01134.x

Tam, T., Hewstone, M., Cairns, E., Tausch, N., Maio, G., & Kenworthy, J. (2007). The impact of intergroup emotions on forgiveness in Northern Ireland. *Group Processes & Intergroup Relations, 10,* 119–136. http://dx.doi.org/10.1177/1368430207071345

Tam, T., Hewstone, M., Kenworthy, J., & Cairns, E. (2009). Intergroup trust in Northern Ireland. *Personality and Social Psychology Bulletin, 35,* 45–59. http://dx.doi.org/10.1177/0146167208325004

Tausch, N., Hewstone, M., Kenworthy, J. B., Psaltis, C., Schmid, K., Popan, J. R., . . . Hughes, J. (2010). Secondary transfer effects of

This document is copyrighted by the American Psychological Association or one of its allied publishers.
This article is intended solely for the personal use of the individual user and is not to be disseminated broadly.

intergroup contact: Alternative accounts and underlying processes. *Journal of Personality and Social Psychology, 99,* 282–302. http://dx.doi.org/10.1037/a0018553

Trew, K., & Benson, D. (1996). Dimensions of social identity in Northern Ireland. In G. M. Breakwell & E. Lyons (Eds.), *Changing European identities* (pp. 123–143). Oxford, England: Butterworth-Heinemann.

Tropp, L. R. (2008). The role of trust in intergroup contact: Its significance and implications for improving relations between groups. In U. Wagner, L. R. Tropp, G. Finchilescu, & C. Tredoux (Eds.), *Improving intergroup relations: Building on the legacy of Thomas F. Pettigrew* (pp. 91–106). Oxford, England: Blackwell Publishing. http://dx.doi.org/10.1002/9781444303117.ch7

Tropp, L. R., & Pettigrew, T. F. (2005). Differential relationships between intergroup contact and affective and cognitive dimensions of prejudice. *Personality and Social Psychology Bulletin, 31,* 1145–1158. http://dx.doi.org/10.1177/0146167205274854

Vezzali, L., Capozza, D., Stathi, S., & Giovannini, D. (2012). Increasing outgroup trust, reducing infrahumanization, and enhancing future contact intentions via imagined intergroup contact. *Journal of Experimental Social Psychology, 48,* 437–440. http://dx.doi.org/10.1016/j.jesp.2011.09.008

Voci, A., & Hewstone, M. (2003). Intergroup contact and prejudice toward immigrants in Italy: The mediational role of anxiety and the moderational role of group salience. *Group Processes & Intergroup Relations, 6,* 37–54. http://dx.doi.org/10.1177/1368430203006001011

Weigel, R. H., Wiser, P. L., & Cook, S. W. (1975). The impact of cooperative learning experiences on cross-ethnic relations and attitudes. *Journal of Social Issues, 31,* 219–244. http://dx.doi.org/10.1111/j.1540-4560.1975.tb00754.x

Wright, S. C., Aron, A., McLaughlin-Volpe, T., & Ropp, S. A. (1997). The extended contact effect: Knowledge of cross-group friendships and prejudice. *Journal of Personality and Social Psychology, 73,* 73–90.

This document is copyrighted by the American Psychological Association or one of its allied publishers.
This article is intended solely for the personal use of the individual user and is not to be disseminated broadly.