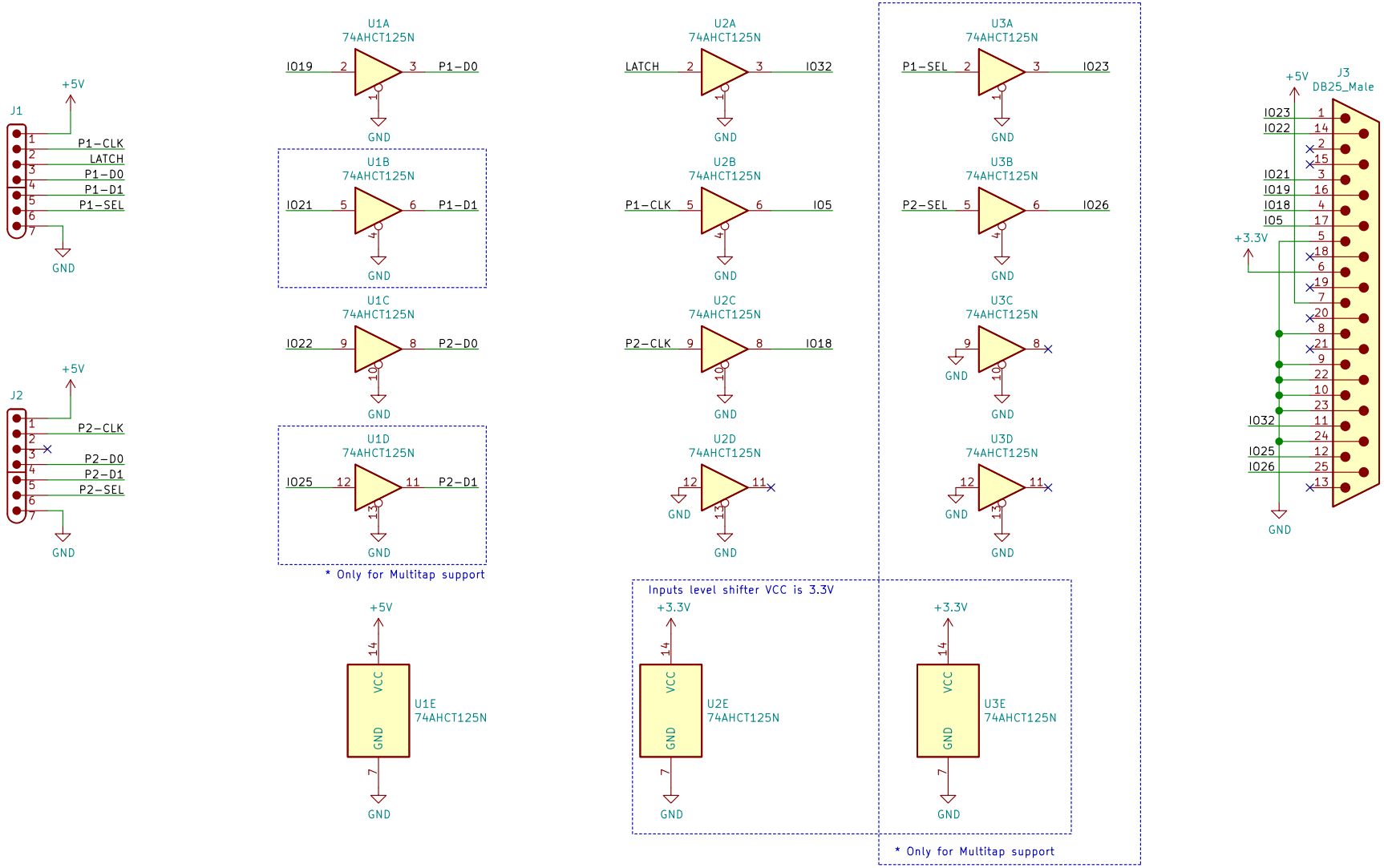

* Very important for DB25 pin 22 (I39/VN) to be connect to GND for proper system detection.

©2020 Jacques Gagnon, licensed under CC-BY-4.0

Sheet: /SNES/
File: SNES.sch

Title: BlueRetro – SFC/SNES adapter cable

Size: USLetter	Date: 2020-10-02	Rev: v1.2
KiCad E.D.A. kicad (5.1.6)-1		Id: 4/7