Microcontroller

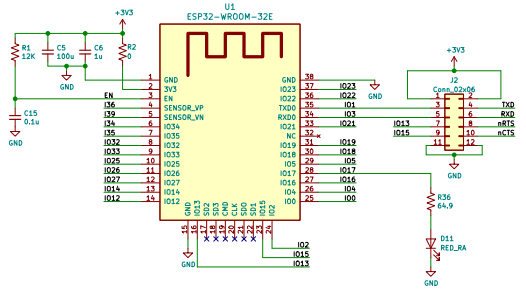

Serial & JTAG (USB Type-C)

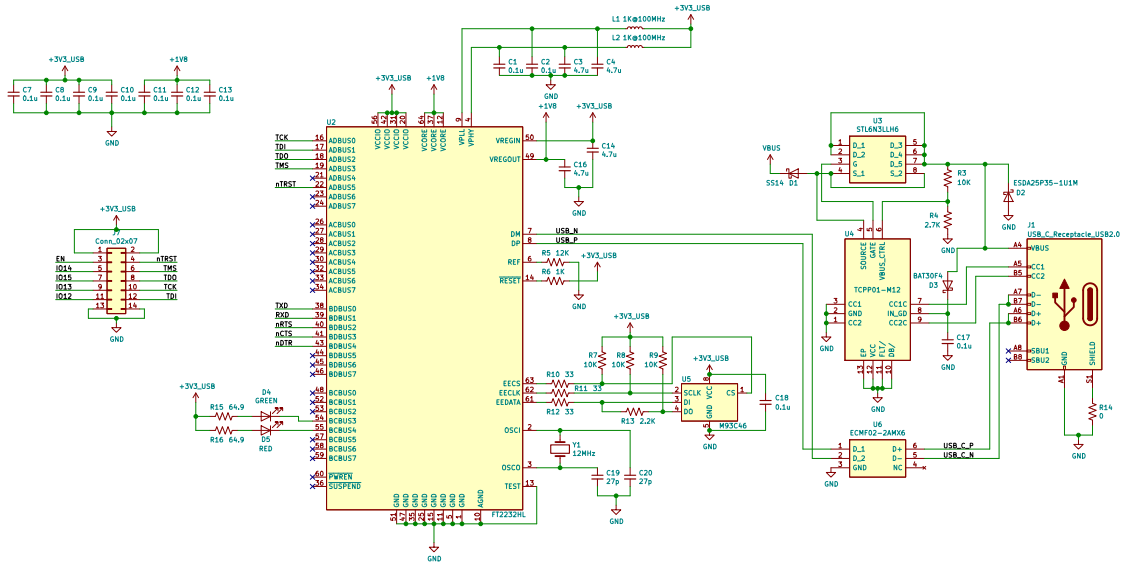

MicroSD

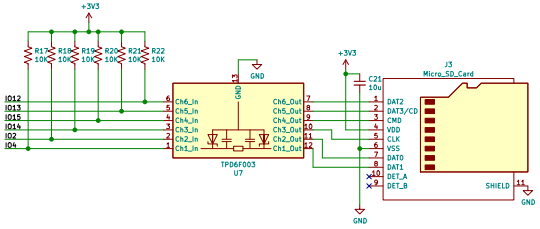

Power

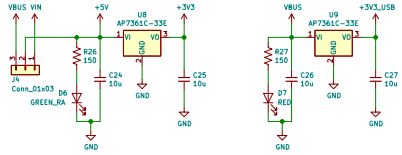

Switches

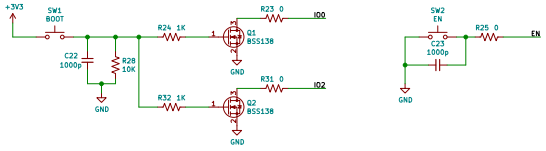

BlueRetro's IOs

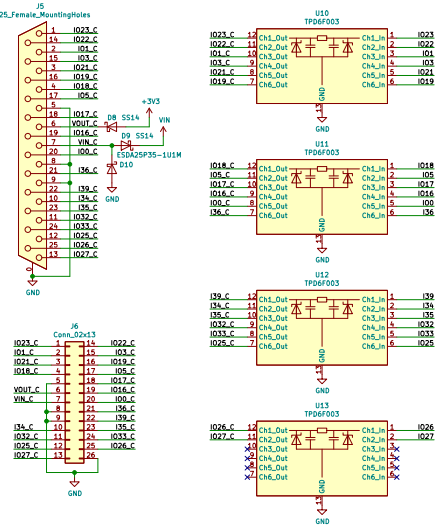

Auto Program

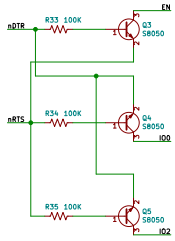

H1 MountingHole
H2 MountingHole
H3 MountingHole
H4 MountingHole

Sheet: /
File: BlueRetroCore.sch

Title: BlueRetro ESP32 DevKit

Size: C	Date: 2020-08-05	Rev: v1.0
KiCad E.D.A. kicad (5.1.6)-1		Id: 1/1