Power Path
#Output 5V0/1A

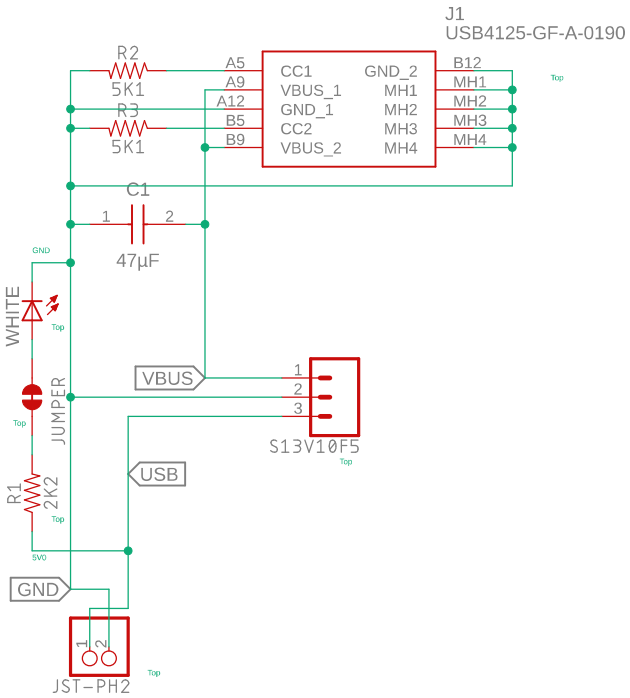

Mountholes

µSonic Industries	UBS-C Bridge_PCB
	Own_USB-C_Breakout.pro_v4.0_Final_AR
	07.05.2023 12:21
	Sheet: 1/1