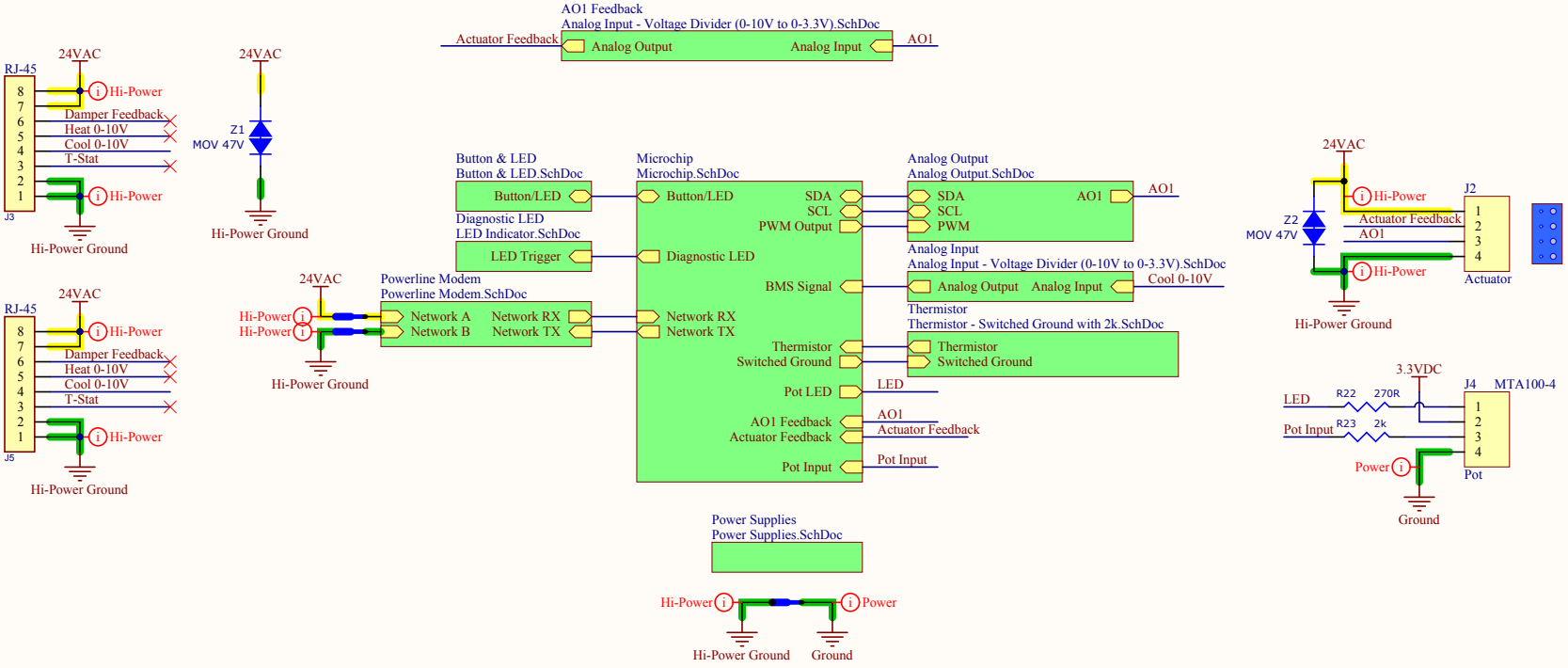

Title	DBV-FC Overview.SchDoc		
Size: A4	Number:	Revision: A	
Date: 3/7/2014	Sheet 1 of 18		
File: X:\DBV-FC\..\DBV-FC Overview.SchDoc	Drawn By: Craig Comberbach		

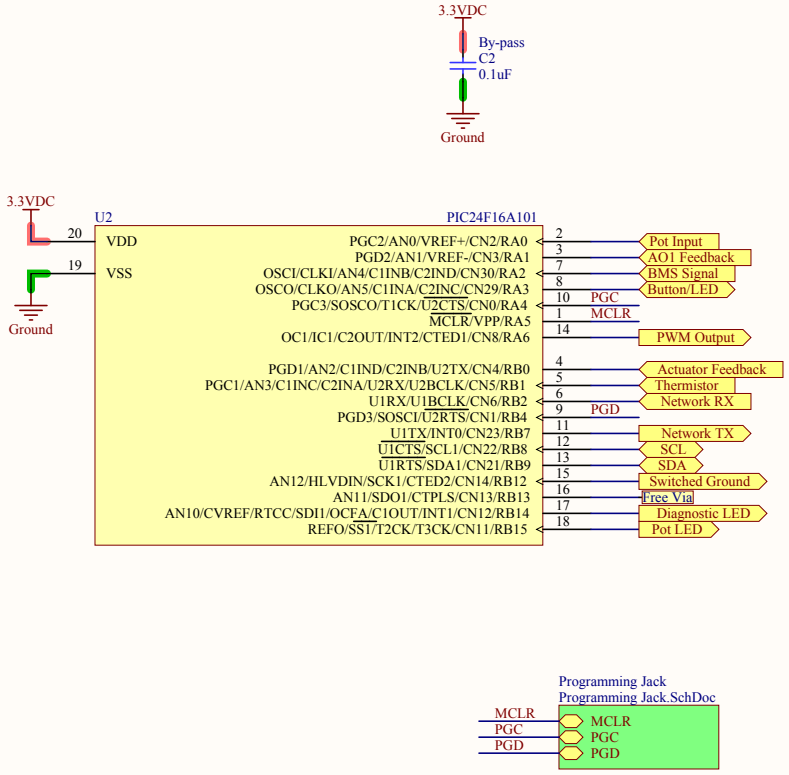

Title	Microchip.SchDoc		
Size: A4	Number:	Revision: A	
Date: 3/7/2014		Sheet 2 of 18	
File: X:\DBV-FC\..\Microchip.SchDoc		Drawn By: Craig Comberbach	

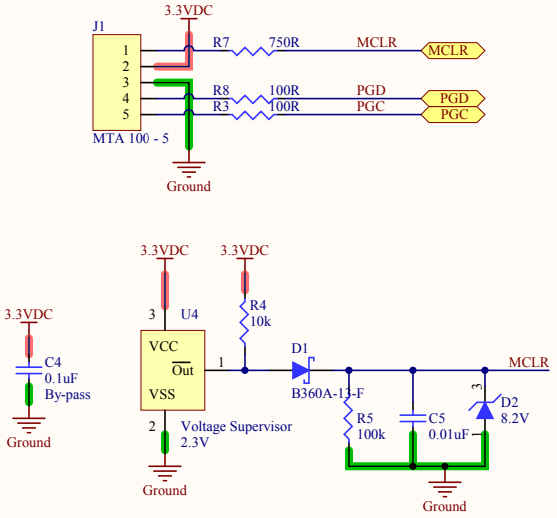

Title	Programming Jack.SchDoc		
Size A4	Number		Revision A
Date: 3/7/2014		Sheet 3 of 18	
File: X:\DBV-FC\..\Programming Jack.SchDoc		Drawn By: Craig Comberbach	

Single Channel DAC

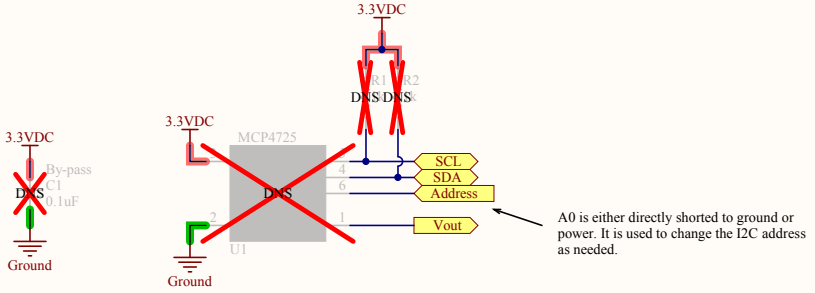

Title	DAC - Single Channel.SchDoc	
Size: A4	Number:	Revision: A
Date: 3/7/2014	Sheet 4 of 18	
File: X:\DBV-FC\..\DAC - Single Channel.SchDoc	Drawn By: Craig Comberbach	

Dual Op-Amp

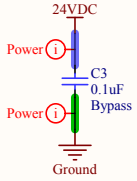

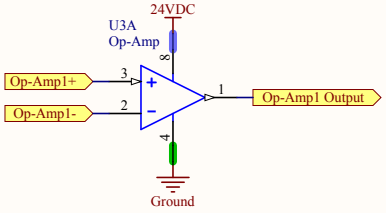

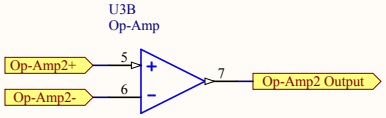

Title: Op-Amp Dual.SchDoc		
Size: A4	Number:	Revision: A
Date: 3/7/2014		Sheet 5 of 18
File: X:\DBV-FC\..\Op-Amp Dual.SchDoc		Drawn By: Craig Comberbach

Op-Amp with positive Feedback

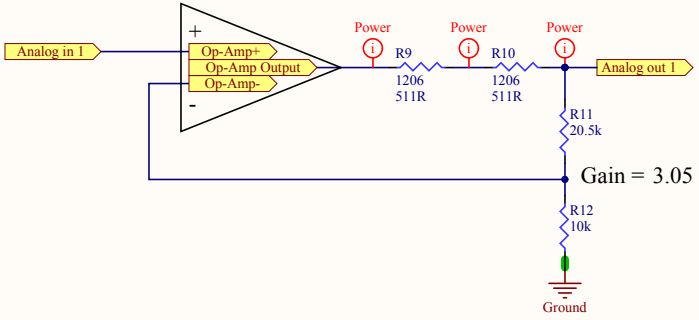

Accepts a 3.3VDC signal and converts it to a 0-10VDC output

Title	Op-Amp Positive Feedback Circuit.SchDoc		
Size: A4	Number:	Revision: A	
Date: 3/7/2014	Sheet 6 of 18		
File: X:\DBV-FC\..\Op-Amp Positive Feedback Circuit.SchDoc	Drawn By: Craig Comberbach		

Network A

Network B

No connections until we figure this circuit out!

Network RX

Network TX

Network Rx is the signal received from the network.
Network Tx is the signal transmitted to the network.

Title: Powerline Modem.SchDoc		
Size: A4	Number:	Revision: A
Date: 3/7/2014	Sheet 7 of 18	
File: X:\DBV-FC\..\Powerline Modem.SchDoc	Drawn By: Craig Comberbach	

Half-Wave Rectifier
Power Supply - Half-Wave Rectifier.SchDoc

24VDC Linear Regulator
Power Supply (Linear) - 24VDC (HW 24VAC source).SchDoc

5VDC Switcher Power Supply - 500mA
Power Supply (Switcher) - 5VDC 500mA (HW 24VAC source).SchDoc

3.3VDC Linear Power Supply
Power Supply (Linear) - 3.3 VDC (5 VDC source).SchDoc

At most I am expecting 58 mA from everything at worst case scenario.

Title	Power Supplies.SchDoc	
Size: A4	Number:	Revision: A
Date: 3/7/2014	Sheet 8 of 18	
File: X:\DBV-FC\..\Power Supplies.SchDoc	Drawn By: Craig Comberbach	

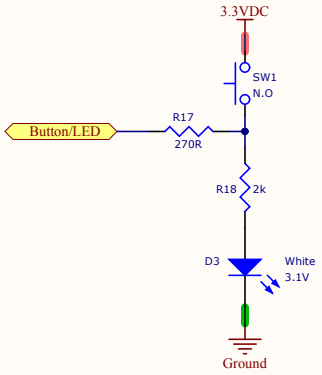

Title	Button & LED.SchDoc		
Size: A4	Number:		Revision: A
Date: 3/7/2014		Sheet 9 of 18	
File: X:\DBV-FC\..\Button & LED.SchDoc		Drawn By: Craig Comberbach	

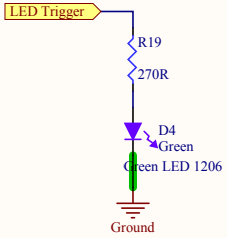

Assuming 10mA target LED current, a maximum of 10VDC can be used to trigger this circuit before the resistor package needs to be increased in size.

Title: LED Indicator.SchDoc		
Size: A4	Number:	Revision: A
Date: 3/7/2014	Sheet 10 of 18	
File: X:\DBV-FC\..\LED Indicator.SchDoc	Drawn By: Craig Comberbach	

Analog Output

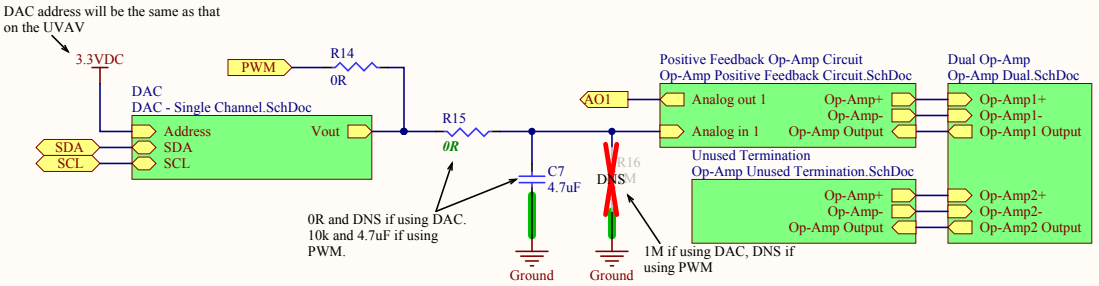

Title	Analog Output.SchDoc	
Size: A4	Number:	Revision: A
Date: 3/7/2014	Sheet 11 of 18	
File: X:\DBV-FC\..\Analog Output.SchDoc	Drawn By: Craig Comberbach	

Basic Analog Input

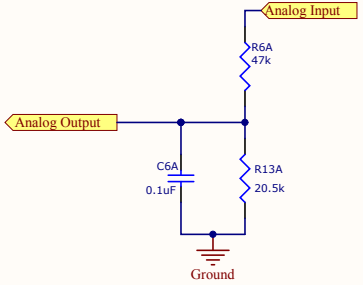

Title	Analog Input - Voltage Divider (0-10V to 0-3.3V).SchDoc	
Size: A4	Number:	Revision: A
Date: 3/7/2014	Sheet 12 of 18	Drawn By: Craig Colebaugh
File: X:\DBV-FC\..\Analog Input - Voltage Divider (0-10V to 0-3.3V).SchDoc		

Basic Analog Input

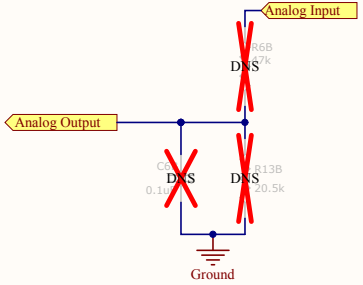

Title	Analog Input - Voltage Divider (0-10V to 0-3.3V).SchDoc	
Size: A4	Number:	Revision: A
Date: 3/7/2014	Sheet 12 of 18	
File: X:\DBV-FC\..\Analog Input - Voltage Divider (0-10V to 0-3.3V).SchDoc	Drawn By: Craig Colebaugh	

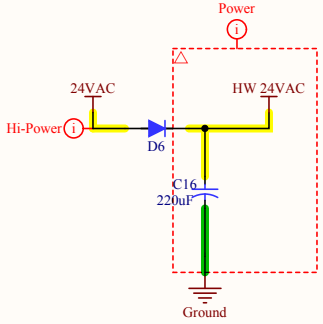

Half-Wave rectification of the power.

Title: Power Supply - Half-Wave Rectifier.SchDoc		
Size: A4	Number:	Revision: A
Date: 3/7/2014	Sheet 13 of 18	
File: X:\DBV-FC\..\Power Supply - Half-Wave Rectifier.SchDoc	Drawn By: Doug Comberbach	

3.3VDC Power

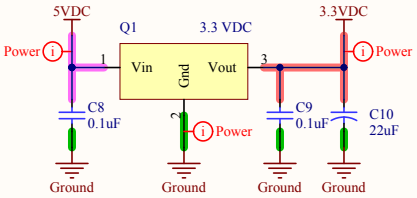

Title	Power Supply (Linear) - 3.3 VDC (5 VDC source).SchDoc	
Size A4	Number	Revision A
Date: 3/7/2014	Sheet 14 of 18	
File: X:\DBV-FC\..\Power Supply (Linear) - 3.3VDC (5VDC source).SchDoc	Drawn By: Craig Cosdorbach	

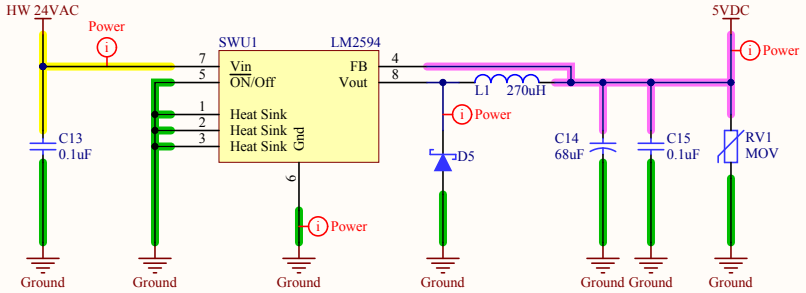

Title	Power Supply (Switcher) - 5VDC 500mA (HW 24VAC source).SchDoc	
Size: A4	Number:	Revision: A
Date: 3/7/2014	Sheet 15 of 18	
File: X:\DBV-FC\..\Power Supply (Switcher) - 5VDC 500mA (HW 24VAC source).SchDoc	Drawn By: Craig Zumbrunnen	

24VDC linear power supply

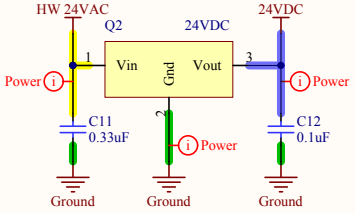

Spec sheet recommeds a 0.33uF cap on the input
and a 0.1uF cap on the output.

Title	Power Supply (Linear) - 24VDC (HW 24VAC source).SchDoc	
Size: A4	Number:	Revision: A
Date: 3/7/2014	Sheet 16 of 18	
File: X:\DBV-FC\..\Power Supply (Linear) - 24VDC (HW 24VAC source).SchDoc	Drawn By: Craig Combs	

Unused Op-Amp Termination

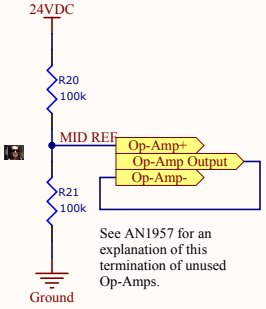

Title: Op-Amp Unused Termination.SchDoc		
Size: A4	Number:	Revision: A
Date: 3/7/2014	Sheet 17 of 18	
File: X:\DBV-FC\..\Op-Amp Unused Termination.SchDoc	Drawn By: Craig Comberbach	

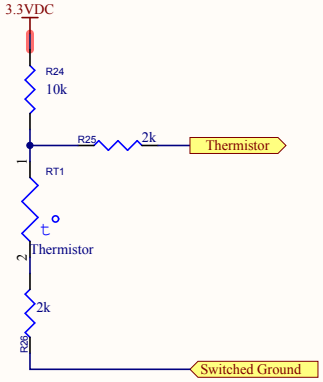

Title	Thermistor - Switched Ground with 2k.SchDoc		
Size: A4	Number:	Revision: A	
Date: 3/7/2014	Sheet 18 of 18	Drawn By: Chris Comberbach	
File: X:\DBV-FC\...\Thermistor - Switched Ground with 2k.SchDoc			

DBV-FC AO Using PWM

Prototype

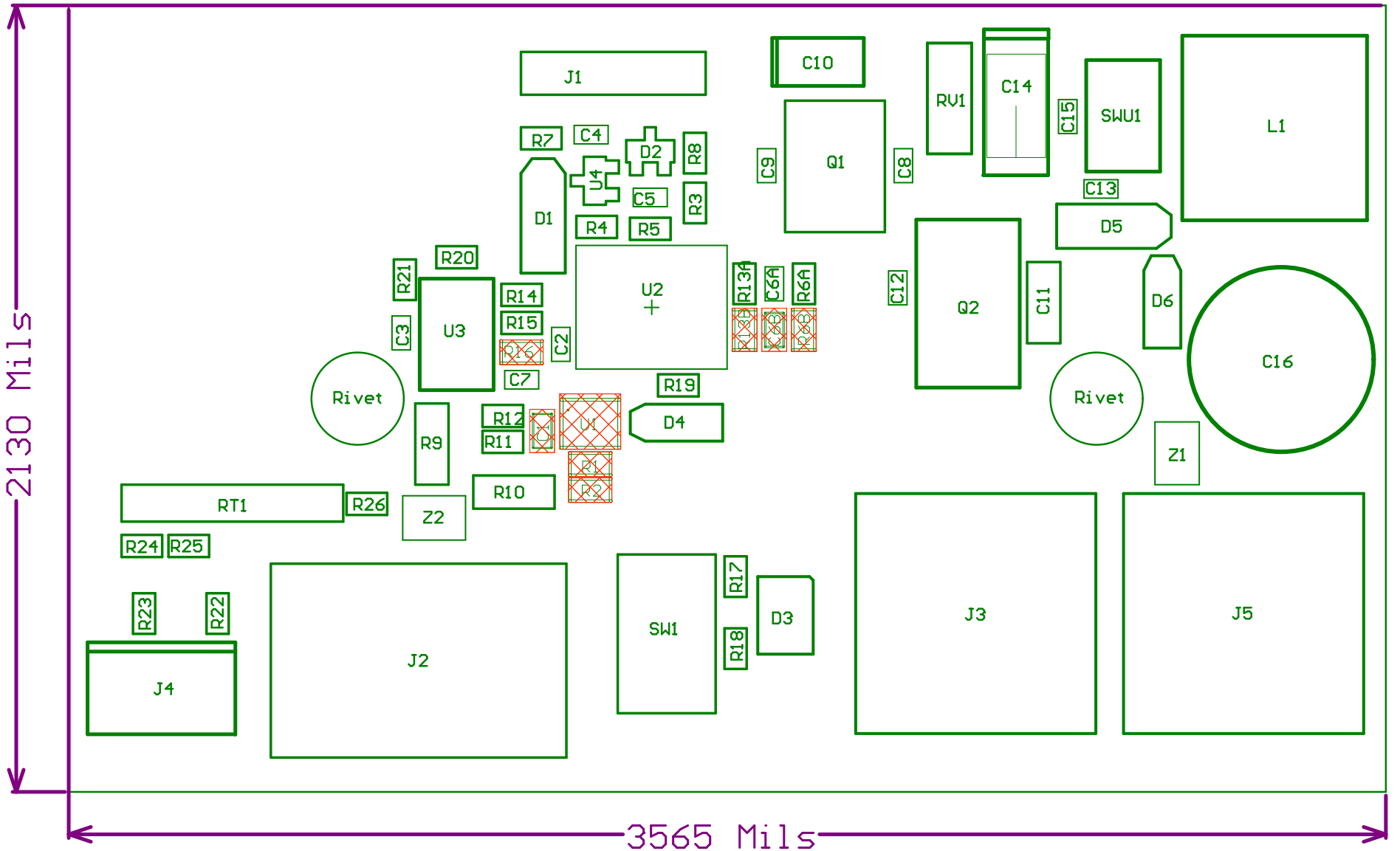

Bill of Materials

Created by: Craig Comberbach

Created on: 3/7/2014 9:52:00 AM

Board: DBV-FC.PrjPcb **Board Revision:** A

Item	Quantity	Designator	Value	Vendor	Vendor P/N	Price P/N
1	0	C1, C6B	0.1uF 0603 10% 50V X7R	Digi-Key	490-1519-2-ND	020101-017
2	9	C2, C3, C4, C6A, C8, C9, C12, C13, C15	0.1uF 0603 10% 50V X7R	Digi-Key	490-1519-2-ND	020101-017
3	1	C5	0.01uF 0603 10% 50V	Avnet	C0603C103K5RACTU	020101-067
4	1	C7	4.7uF 0603 50V X7R			020101-015
5	1	C10	22uF 1411 20% 10V	Digi-Key	495-2209-2-ND	020101-005
6	1	C11	0.33uF 1206 10% 50V X7R	Avnet	C1206C334K5RACTU	020101-066
7	1	C14	68uF 2917 20% 20V	Digi-Key	399-3803-2-ND	020101-069
8	1	C16	220uF 20% 50V	Avnet	NACZ221M50V10X10.5TR13F	020101-008
9	1	D1	Schottky Diode - B360A-13-F	Digi-Key	B360A-FDITR-ND	020107-024
10	1	D2	8.2V Zener Diode	Digi-Key	BZX84C8V2-FDITR-ND	020107-019
11	1	D3	White LED 1206	Avnet	MWT801S	020102-004
12	1	D4	Green LED 1206	Digi-Key	160-1169-2-ND	020102-001
13	1	D5	Schottky Diode - 2.1A 100V	Digi-Key	10MQ100NPBFTR-ND	020107-014
14	1	D6	Signal Diode	Digi-Key		020107-002
15	2	Fiducial1, Fiducial2				
16	1	J1	MTA 100 - 5 Low Profile	Digi-Key		020129-016
17	1	J2	18 pin Strip	Digi-Key	1-1546931-8-ND	020013-004
18	2	J3, J5	RJ-45 - Side entry	Digi-Key	380-1046-ND	020015-007
19	1	J4	MTA100-4			020009-001
20	1	L1	270uH			020246-004
21	2	Label1, Label2	Firmware Label, Datecode Label			029999-001
22	1	PCB1	PCB Panel			TBD
23	1	Q1	3.3 VDC fixed regulator	Digi-Key	576-1274-2-ND	020106-011
24	1	Q2	24VDC fixed regulator	Avnet	L78M24CDT-TR	020106-005
25	0	R1, R2	1k 0603 1%			020100-197
26	2	R3, R8	100R 0603 1%	Digi-Key	311-100HRTR-ND	020100-260
27	3	R4, R12, R24	10k 0603 1%	Digi-Key	RMCF0603FT10K0TR-ND	020100-199
28	3	R5, R20, R21	100k 0603 1%	Digi-Key	311-100KHRTR-ND	020100-198
29	1	R6A	47k 0603 1%			020100-241
30	0	R6B	47k 0603 1%			020100-241
31	1	R7	750R 0603 1%	Digi-Key	311-750HRTR-ND	020100-266
32	2	R9, R10	511R 1206 1%	Avnet	CRCW1206511RFKEA	020100-003
33	2	R11, R13A	20.5k 0603 1%	Digi-Key	311-20.5KHRTR-ND	020100-239
34	0	R13B	20.5k 0603 1%	Digi-Key	311-20.5KHRTR-ND	020100-239
35	2	R14, R15	0R 0603, 10k 0603 1%	Digi-Key	311-0.0GRTR-ND	020100-235
36	0	R16	1M 0603 5%	Avnet	CRCW06031M00JNEA/BKN	020100-165
37	3	R17, R19, R22	270R 0603 1%	Digi-Key	RHM270HTR-ND	020100-262
38	4	R18, R23, R25, R26	2k 0603 1%	Digi-Key	P2.00KHTR-ND	020100-231
39	2	Rivet1, Rivet2	Rivet	Digi-Key		034050-004
40	1	RT1	Thermistor - 10k			020049-002
41	1	RV1	MOV 5.5V	Digi-Key	F2215TR-ND	020103-006
42	2	Standoff1, Standoff2	3/8 Nylon Spacer			020570-003
43	1	SW1	N.O Pushbutton	Avnet	PTS645SK43SMTRLFS	020111-006
44	1	SWU1	LM2594	Digi-Key	LM2594MX-5.0TR-ND	020106-003
45	1	TerminalBlock1	T-Block - 4 Position Blue Terminal Block	Digi-Key	A98030-ND	020014-013
46	0	U1	DAC	Digi-Key	MCP4725A1T-E/CHCT-ND	020173-001
47	1	U2	PIC24F16A101	Digi-Key	PIC24F16KA101-I/SS-ND	020104-009
48	1	U3	LM358N Dual Op-Amp	Avnet	LM358DR2G	020032-003
49	1	U4	2.3V Voltage Supervisor	Digi-Key	497-4952-2-ND	020172-001
50	2	Z1, Z2	MOV 47V 1210	Digi-Key	495-2396-ND	020103-005