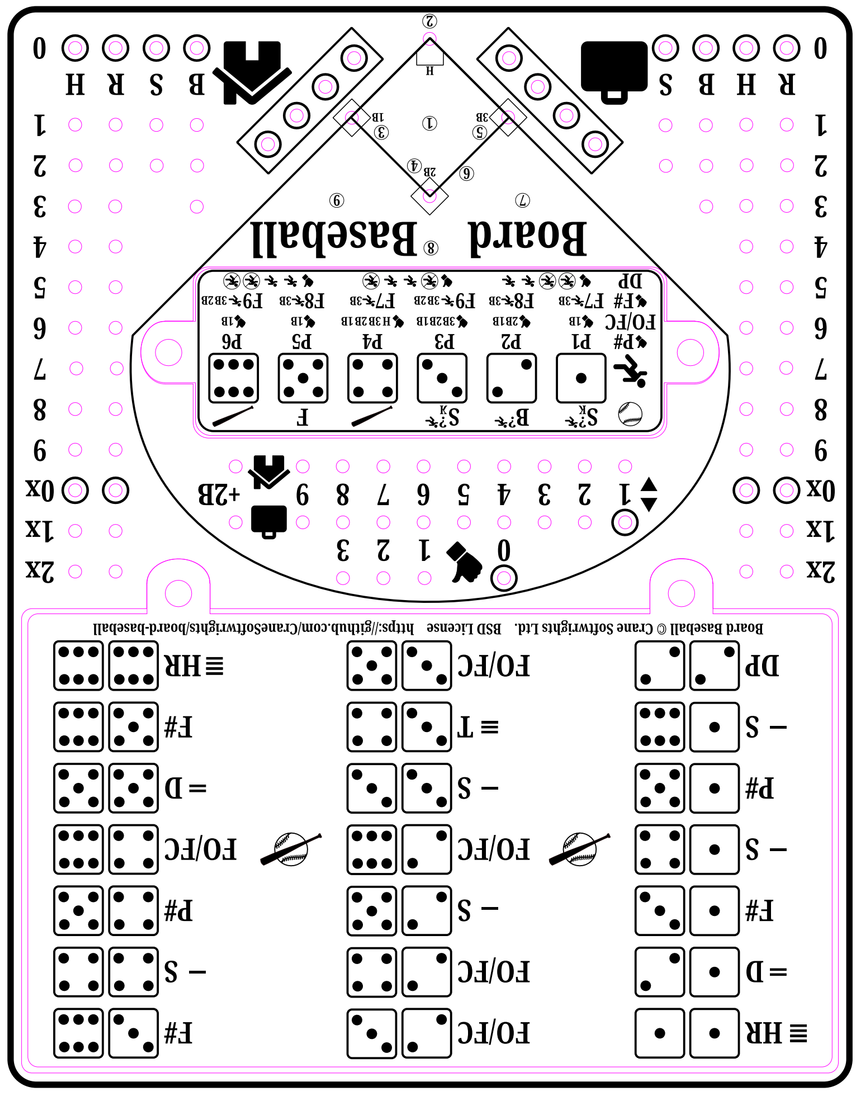
≡ HR
FO/FC
F#
= D
FO/FC
– S
F#
– S
FO/FC
P#
– S
FO/FC
= D
P#
– S
≡ T
F#
DP
FO/FC
≡ HR
Board Baseball © Crane Softwrights Ltd. BSD License https://github.com/CraneSoftwrights/board-baseball
2x 1x 0x 9 8 7 6 5 4 3 2 1 0
0 1 2 3
1 2 3 4 5 6 7 8 9 +2B
P# FO/FC P1 P2 P3 P4 P5 P6
F# DP F7 F8 F9 F9 F8 F7
Board Baseball

1

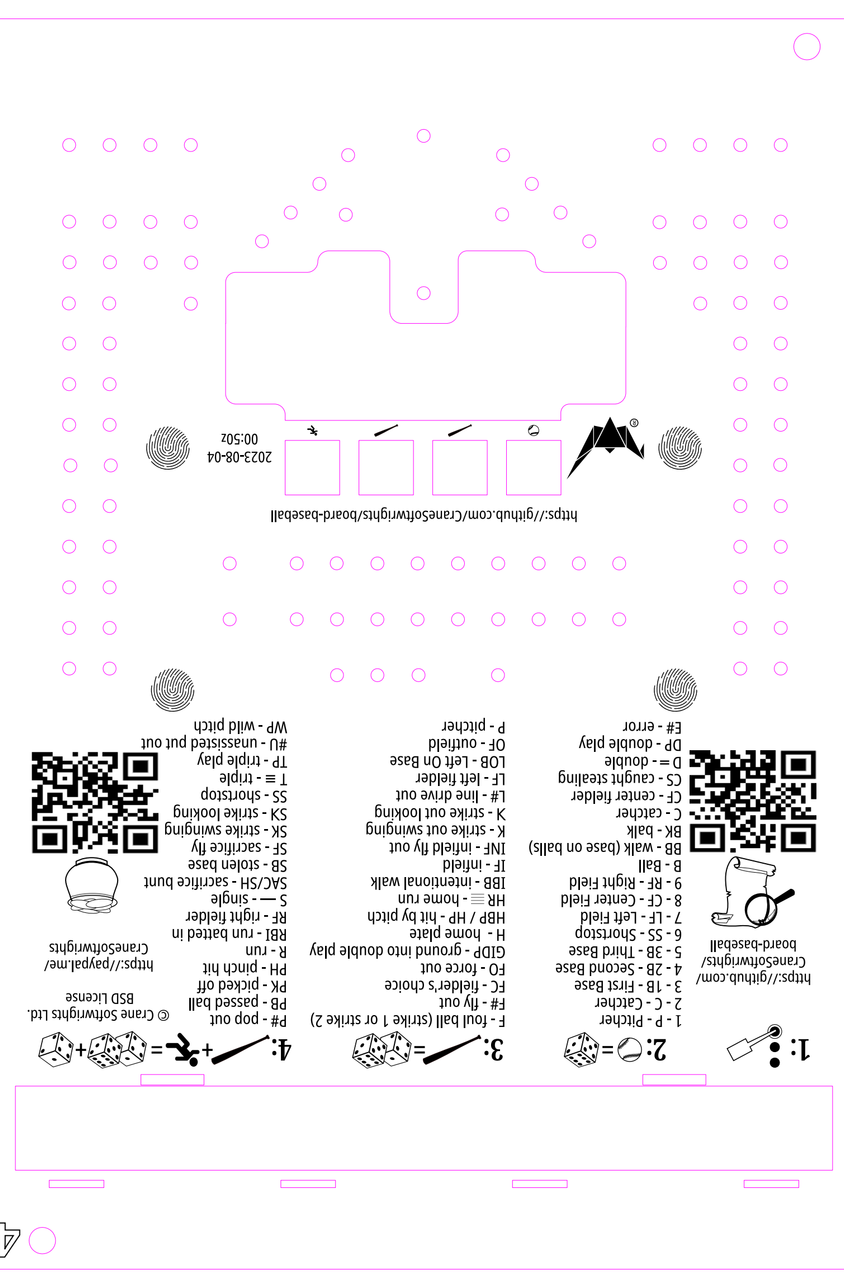
1:
2: = 1 - P - Pitcher 2 - C - Catcher 3 - 1B - First Base 4 - 2B - Second Base 5 - 3B - Third Base 6 - SS - Shortstop 7 - LF - Left Field 8 - CF - Center Field 9 - RF - Right Field B - Ball
https://github.com/CraneSoftwrights/board-baseball
BB - walk (base on balls) BK - balk C - catcher CF - center fielder CS - caught stealing D = - double DP - double play E# - error
3: = F - foul ball (strike 1 or strike 2) F# - fly out FC - fielder's choice FO - force out GIDP - ground into double play H - home plate HBP / HP - hit by pitch HR ≡ - home run IBB - intentional walk IF - infield INF - infield fly out K - strike out swinging K - strike out looking L# - line drive out LF - left fielder LOB - Left On Base OF - outfield P - pitcher
4: + = + +
P# - pop out PB - passed ball PK - picked off PH - pinch hit R - run RBI - run batted in RF - right fielder S — - single SAC/SH - sacrifice bunt SB - stolen base SF - sacrifice fly SK - strike swinging SK - strike looking SS - shortstop T ≡ - triple TP - triple play #U - unassisted put out WP - wild pitch
© Crane Softwrights Ltd. BSD License
https://paypal.me/CraneSoftwrights
https://github.com/CraneSoftwrights/board-baseball
2023-08-04 00:50z

4

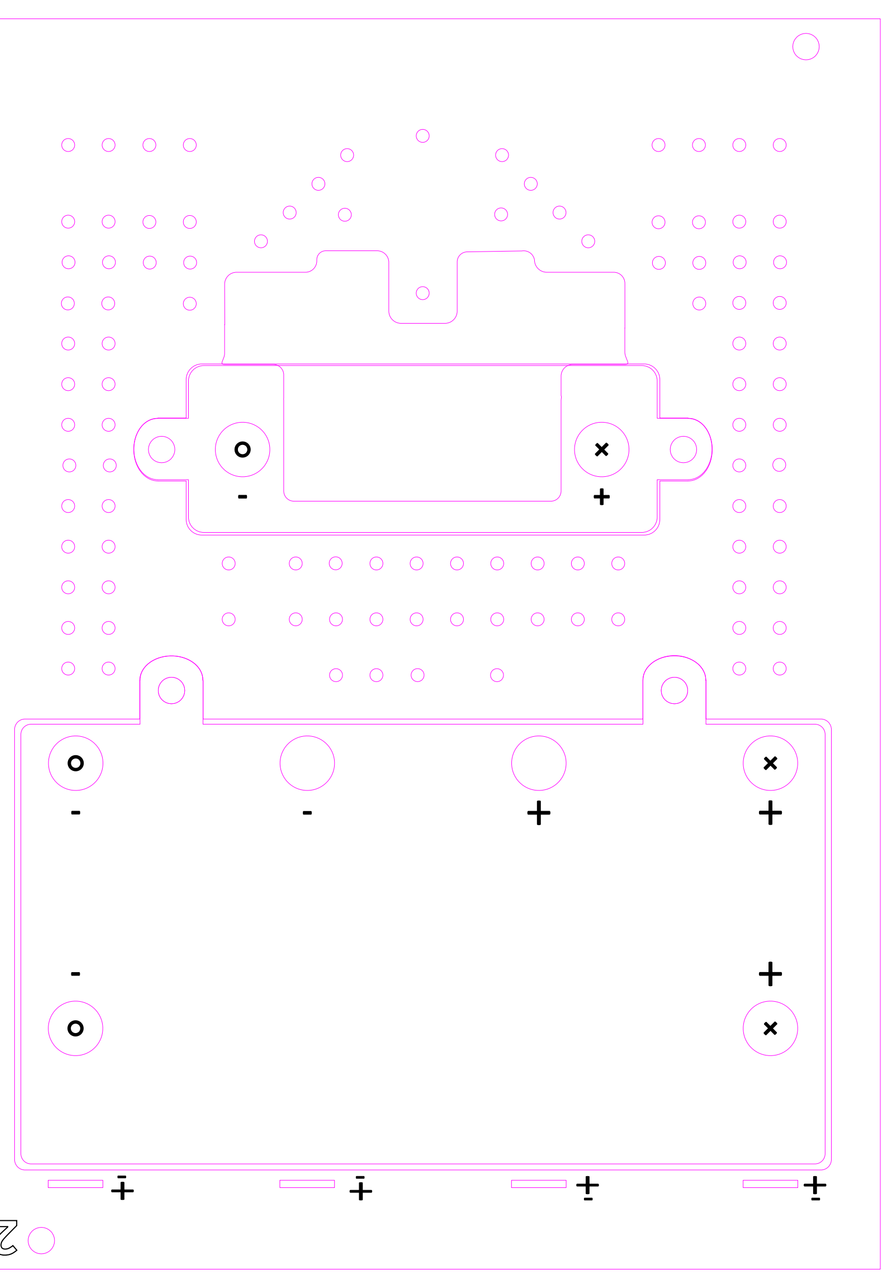
+ + + +
+ + - -
+ -

2

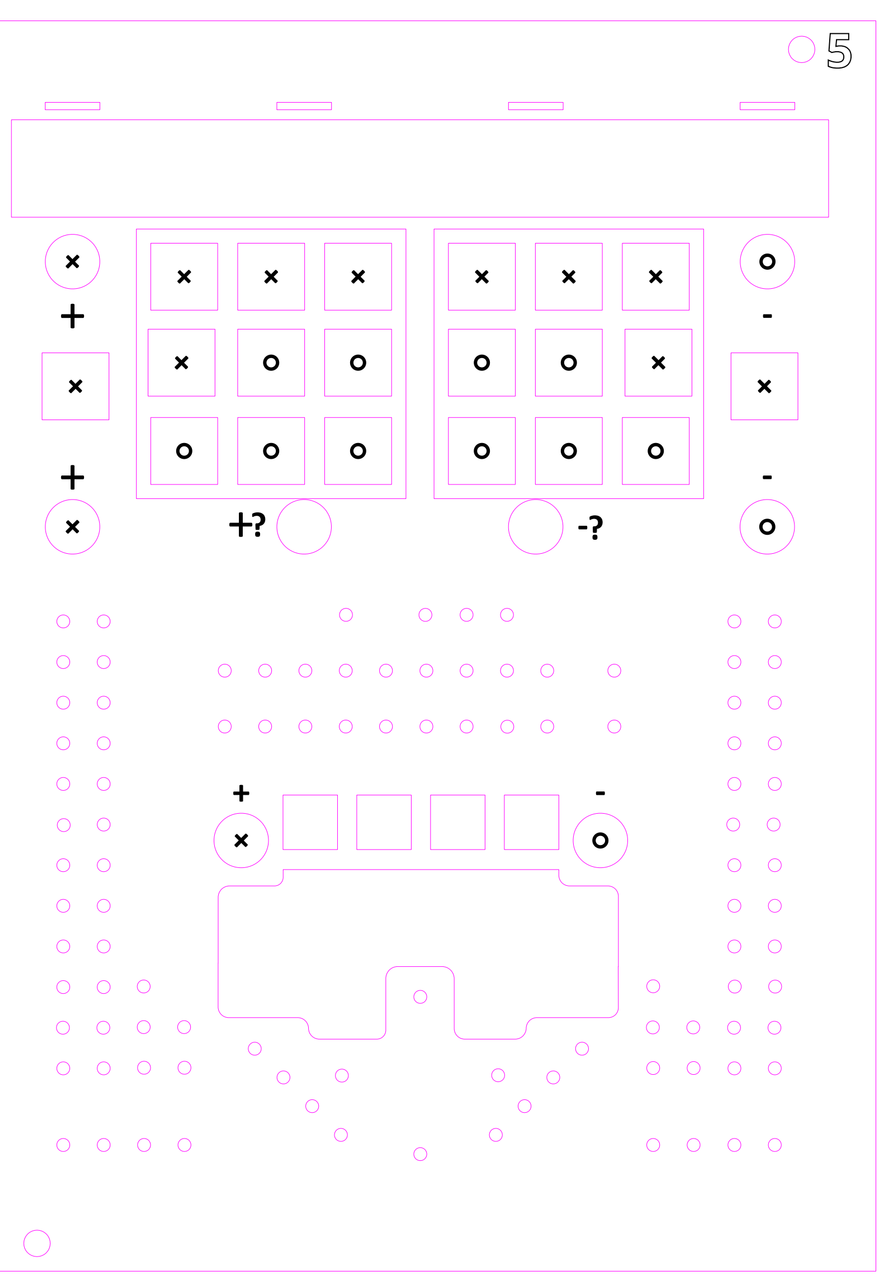
+
+
+?
-?
-
-
+
-

5

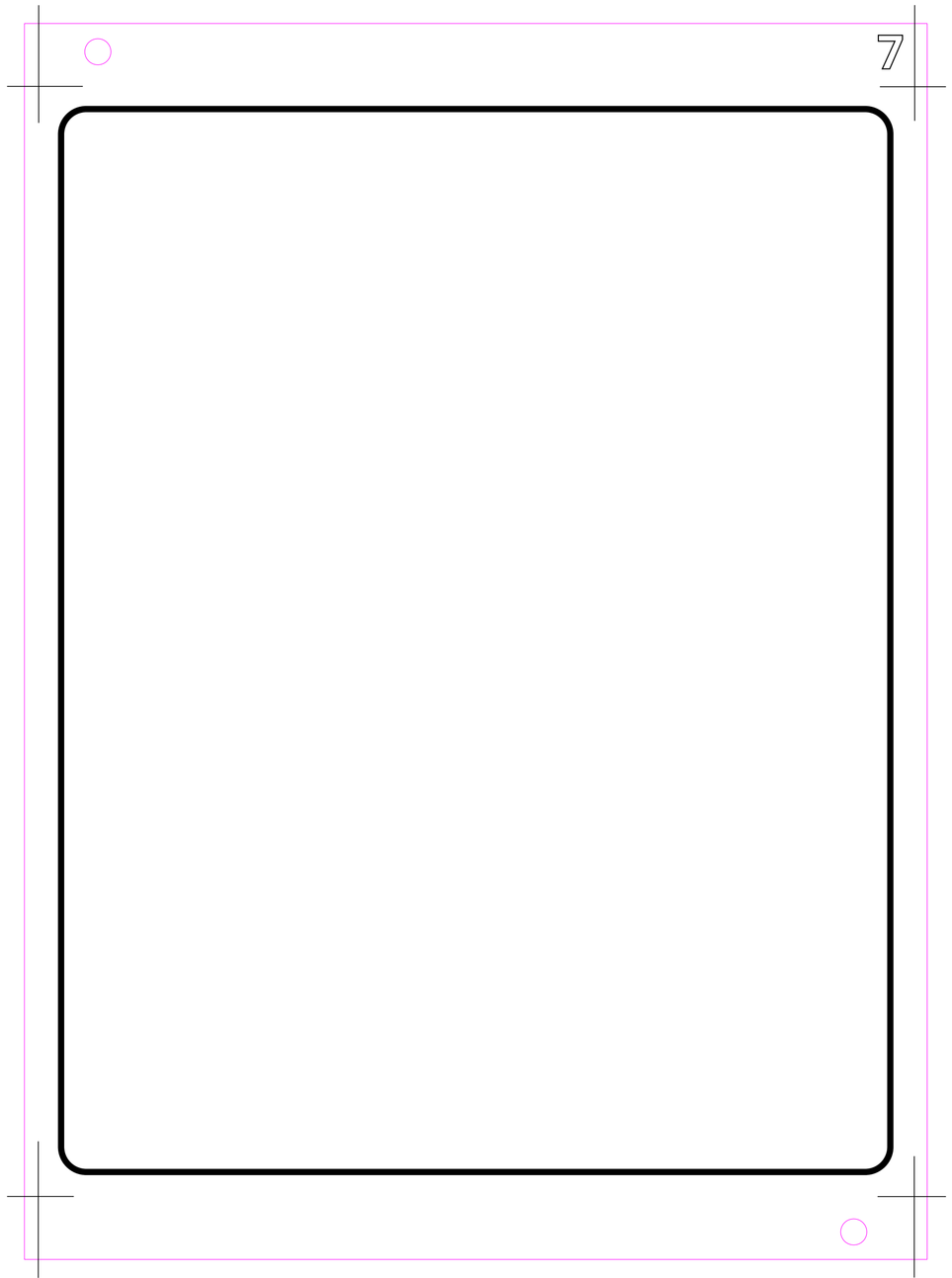

7

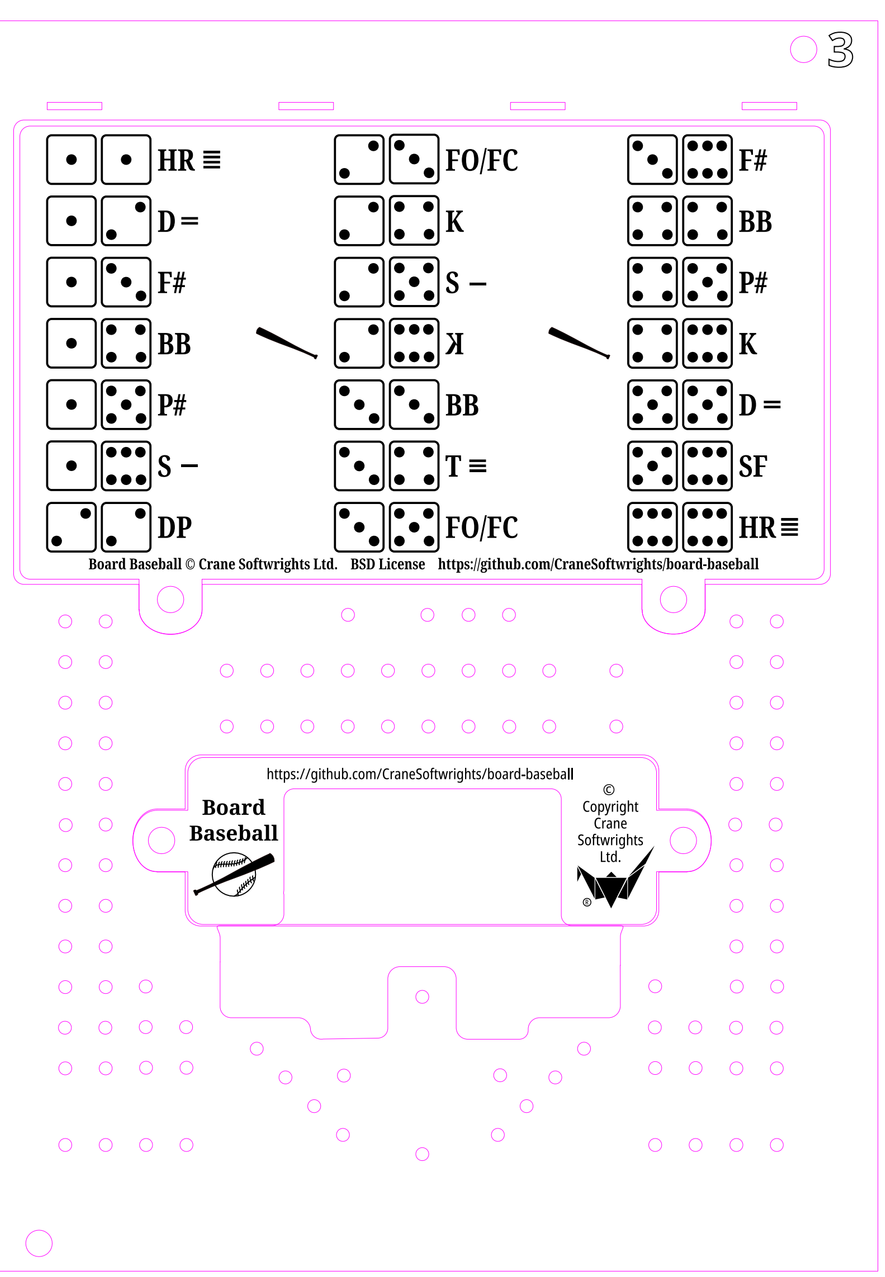
HR ≡
FO/FC
F#
D =
K
BB
F#
S –
P#
BB
K
P#
K
D =
S –
T ≡
SF
DP
FO/FC
HR ≡
Board Baseball © Crane Softwrights Ltd. BSD License https://github.com/CraneSoftwrights/board-baseball
https://github.com/CraneSoftwrights/board-baseball
Board Baseball
© Copyright Crane Softwrights Ltd.

3