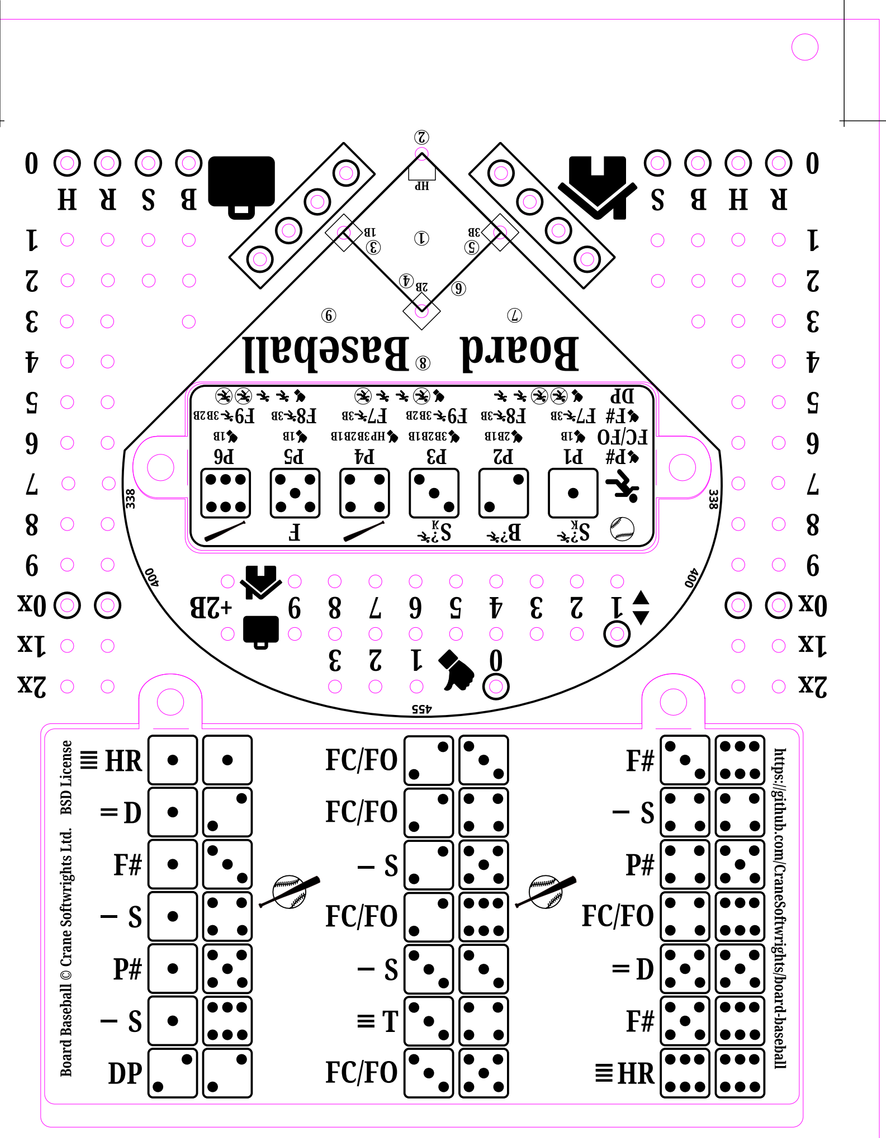
Board Baseball © Crane Softwrights Ltd. BSD License
https://github.com/CraneSoftwrights/board-baseball
Board Baseball

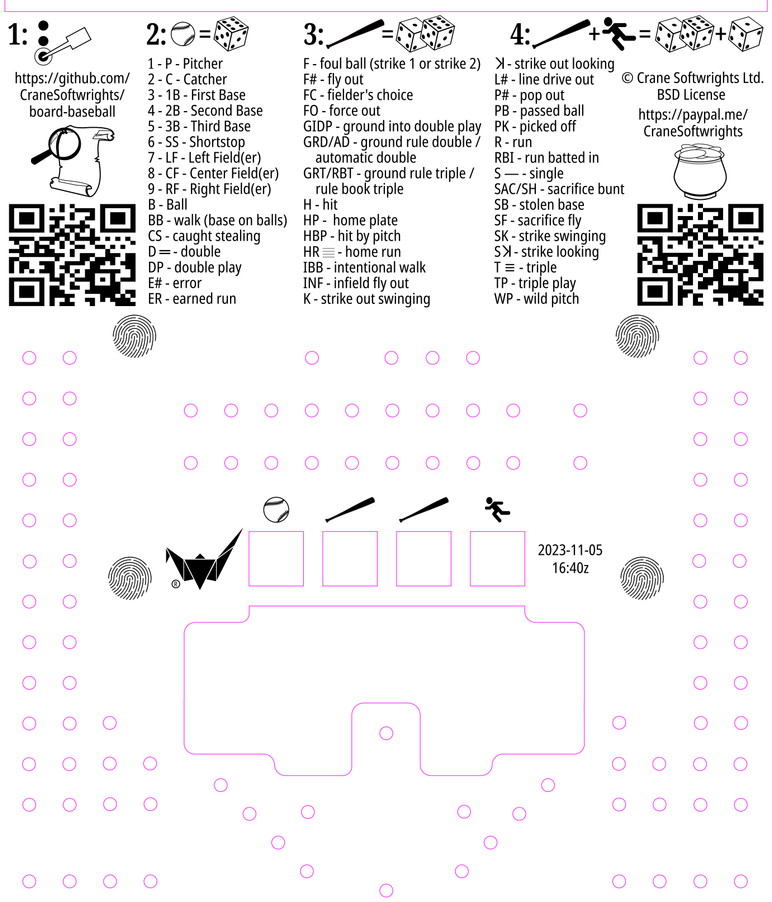
1:
https://github.com/CraneSoftwrights/board-baseball
2:
1 - P - Pitcher
2 - C - Catcher
3 - 1B - First Base
4 - 2B - Second Base
5 - 3B - Third Base
6 - SS - Shortstop
7 - LF - Left Field(er)
8 - CF - Center Field(er)
9 - RF - Right Field(er)
B - Ball
BB - walk (base on balls)
CS - caught stealing
D = - double
DP - double play
E# - error
ER - earned run
3:
F - foul ball (strike 1 or strike 2)
F# - fly out
FC - fielder's choice
FO - force out
GIDP - ground into double play
GRD/AD - ground rule double / automatic double
GRT/RBT - ground rule triple / rule book triple
H - hit
HP - home plate
HBP - hit by pitch
HR ≡ - home run
IBB - intentional walk
INF - infield fly out
K - strike out swinging
4:
K - strike out looking
L# - line drive out
P# - pop out
PB - passed ball
PK - picked off
R - run
RBI - run batted in
S — - single
SAC/SH - sacrifice bunt
SB - stolen base
SF - sacrifice fly
SK - strike swinging
SK - strike looking
T ≡ - triple
TP - triple play
WP - wild pitch
© Crane Softwrights Ltd.
BSD License
https://paypal.me/CraneSoftwrights
2023-11-05
16:40z

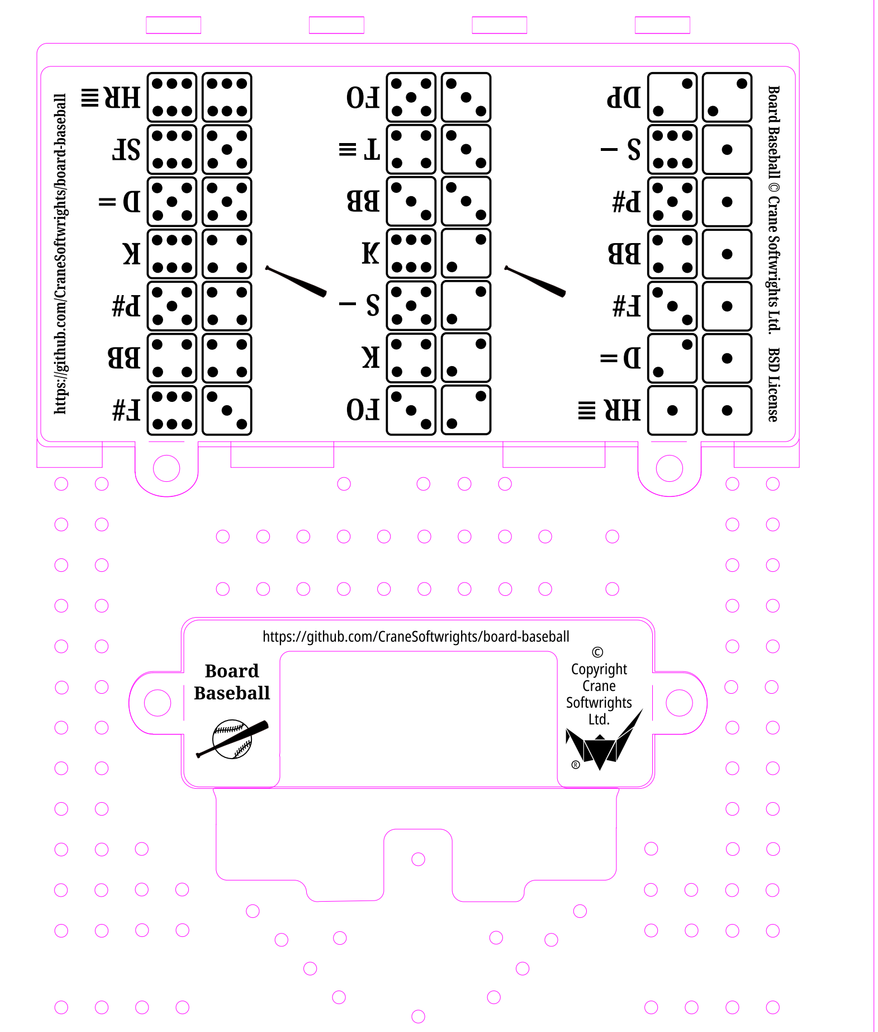
Board Baseball © Crane Softwrights Ltd. BSD License
https://github.com/CraneSoftwrights/board-baseball
https://github.com/CraneSoftwrights/board-baseball
Board Baseball
©
Copyright
Crane
Softwrights
Ltd.