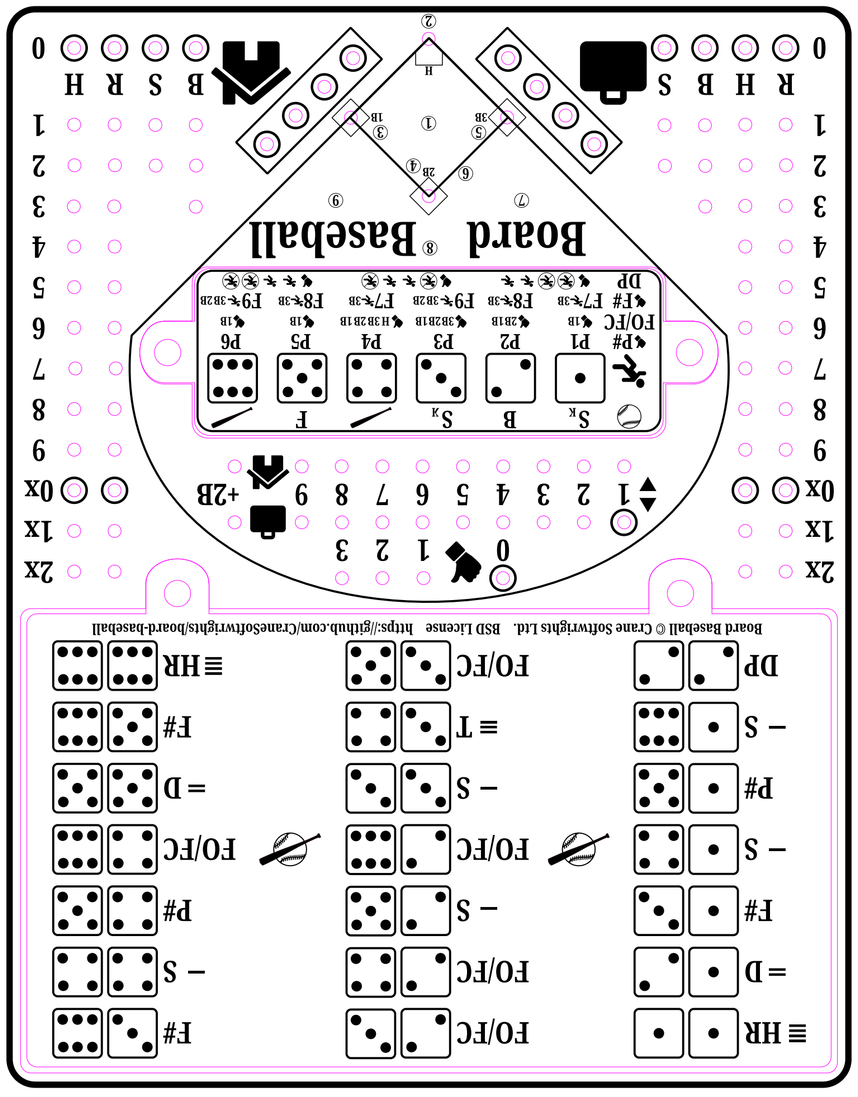
≡ HR
FO/FC
F#
= D
FO/FC
– S
F#
FO/FC
P#
– S
FO/FC
– S
P#
– S
= D
DP
FO/FC
≡ T
F#
Board Baseball © Crane Softwrights Ltd. BSD License https://github.com/CraneSoftwrights/board-baseball
2x
1x
0x
0x
1x
2x
0
1
2
3
1
2
3
4
5
6
7
8
9
+2B
9
8
7
6
5
4
3
2
1
0
S
B
S
F
P#
FO/FC
P1
P2
P3
P4
P5
P6
F#
DP
F7
F8
F9
Board Baseball
R
H
B
S
B
S
R
H
0
0

1

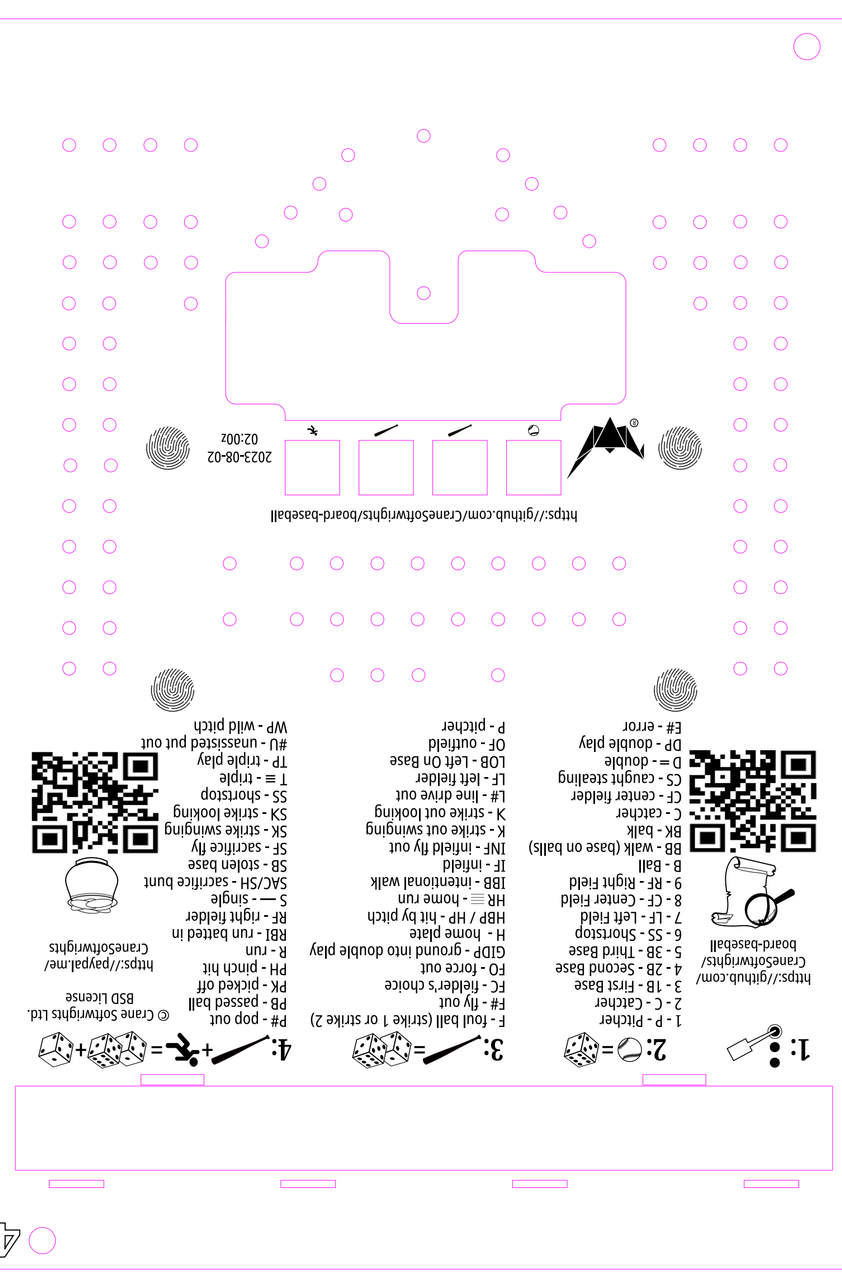
1:
2:
=
1 - P - Pitcher
2 - C - Catcher
3 - 1B - First Base
4 - 2B - Second Base
5 - 3B - Third Base
6 - SS - Shortstop
7 - LF - Left Field
8 - CF - Center Field
9 - RF - Right Field
B - Ball
https://github.com/CraneSoftwrights/board-baseball
BB - walk (base on balls)
BK - balk
C - catcher
CF - center fielder
CS - caught stealing
D = - double
DP - double play
E# - error
F - foul ball (strike 1 or strike 2)
F# - fly out
FC - fielder's choice
FO - force out
GIDP - ground into double play
H - home plate
HBP / HP - hit by pitch
HR ≡ - home run
IBB - intentional walk
IF - infield
INF - infield fly out
K - strike out swinging
K - strike out looking
L# - line drive out
LF - left fielder
LOB - Left On Base
OF - outfield
P - pitcher
3:
=
P# - pop out
PB - passed ball
PK - picked off
PH - pinch hit
R - run
RBI - run batted in
RF - right fielder
S — - single
SAC/SH - sacrifice bunt
SB - stolen base
SF - sacrifice fly
SK - strike swinging
SK - strike looking
SS - shortstop
T ≡ - triple
TP - triple play
#U - unassisted put out
WP - wild pitch
4:
+
=
+
© Crane Softwrights Ltd.
BSD License
https://paypal.me/CraneSoftwrights
2023-08-02
02:00z

4

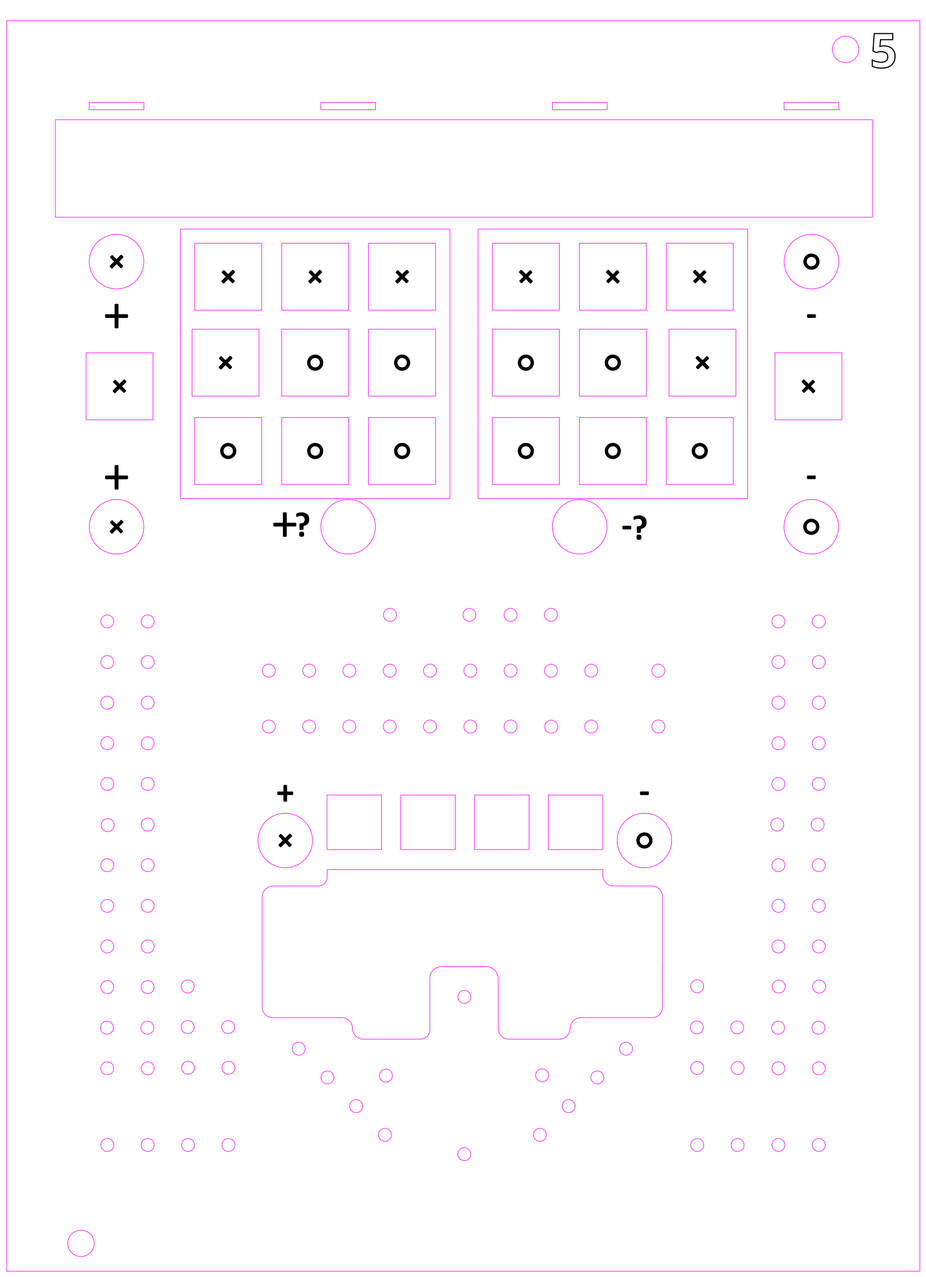
+
-
+
-
+
-
+
-

2

5
+
+
+?
-?
-
-
+
-

6

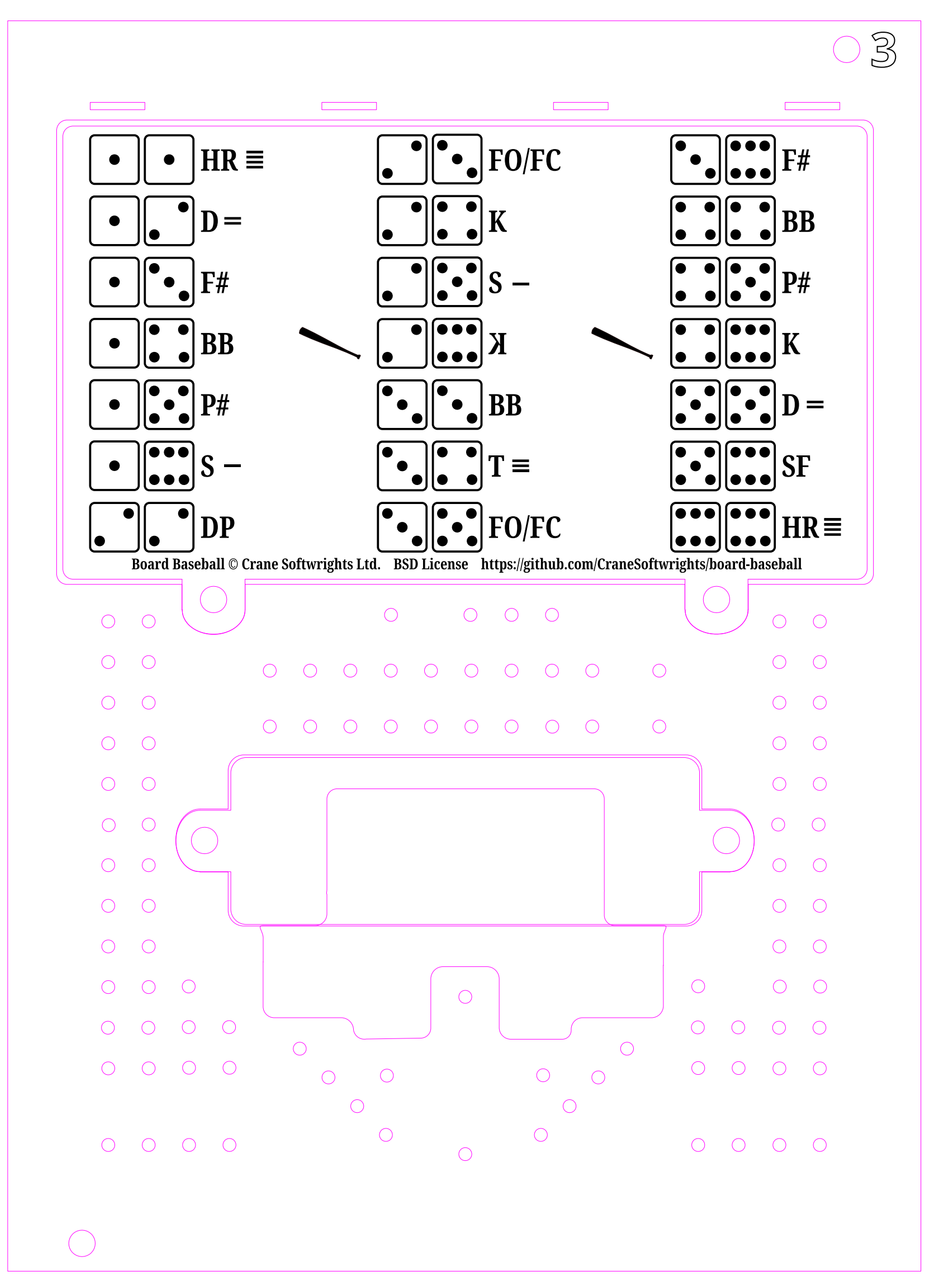
3
HR ≡
FO/FC
F#
D =
K
BB
F#
S –
P#
BB
K
K
P#
BB
D =
S –
T ≡
SF
DP
FO/FC
HR ≡
Board Baseball © Crane Softwrights Ltd. BSD License https://github.com/CraneSoftwrights/board-baseball