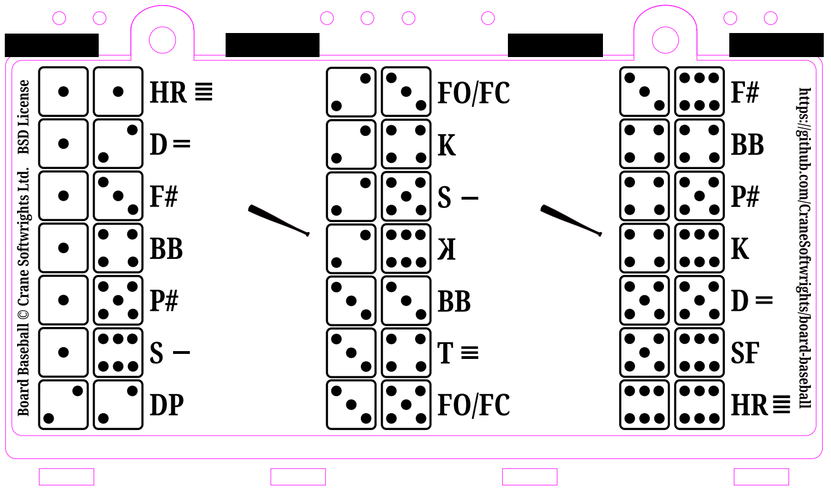
Board Baseball © Crane Softwrights Ltd. BSD License
https://github.com/CraneSoftwrights/board-baseball
DP
S –
#P
BB
#F
D =
HR ≡
FO/FC
≡ T
BB
K
– S
K
FO/FC
HR ≡
SF
D =
K
#P
#F

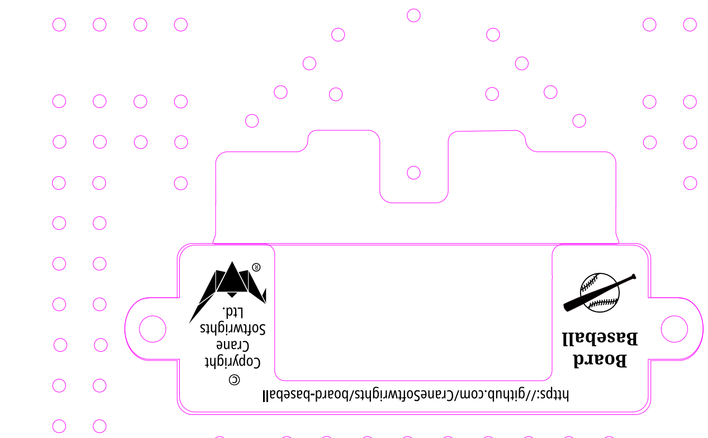
Board
Baseball
https://github.com/CraneSoftwrights/board-baseball
© Copyright Crane Softwrights Ltd.

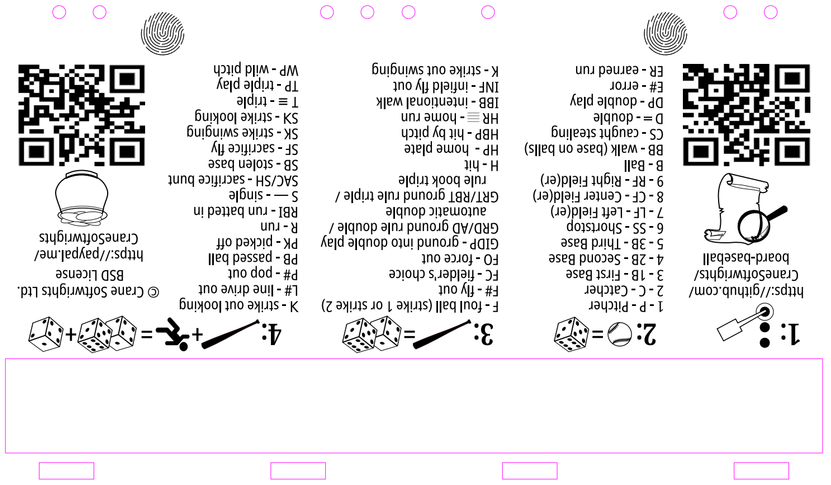
1:
https://github.com/CraneSoftwrights/board-baseball
1 - P - Pitcher
2 - C - Catcher
3 - 1B - First Base
4 - 2B - Second Base
5 - 3B - Third Base
6 - SS - Shortstop
7 - LF - Left Field(er)
8 - CF - Center Field(er)
9 - RF - Right Field(er)
B - Ball
BB - walk (base on balls)
CS - caught stealing
D = - double
DP - double play
E# - error
ER - earned run
2:
3:
F - foul ball (strike 1 or strike 2)
F# - fly out
FC - fielder's choice
FO - force out
GIDP - ground into double play
GRD/AD ground rule double /
automatic double
GRT/RBT ground rule triple /
rule book triple
H - hit
HP - home plate
HBP - hit by pitch
HR ≡ - home run
IBB - intentional walk
INF - infield fly out
K - strike out swinging
4:
K - strike out looking
L# - line drive out
P# - pop out
PB - passed ball
PK - picked off
R - run
RBI - run batted in
S — - single
SAC/SH - sacrifice bunt
SB - stolen base
SF - sacrifice fly
SK - strike swinging
SK - strike looking
T ≡ - triple
TP - triple play
WP - wild pitch
© Crane Softwrights Ltd.
BSD License
https://paypal.me/
CraneSoftwrights
2023-08-10
11:50z

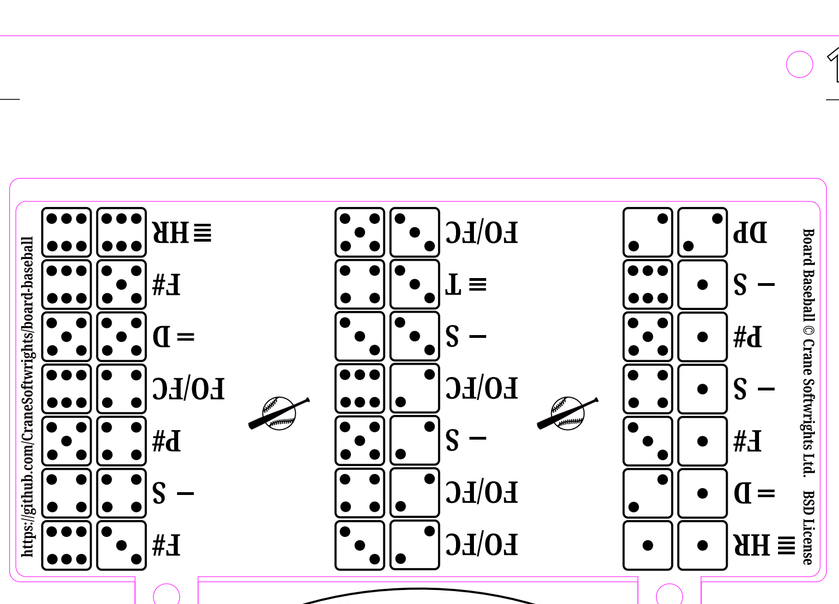
Board Baseball © Crane Softwrights Ltd. BSD License
https://github.com/CraneSoftwrights/board-baseball
DP
S –
P#
FO/FC
D =
F#
HR ≡
FO/FC
≡ T
S –
FO/FC
FO/FC
S –
FO/FC
FO/FC
D =
F#
S –
P#
FO/FC
D =
F#
HR ≡
2x
1x
0x
9
8
7
6
5
4
3
2
1
0
R H B S
B S R H
0 1 2 3
1 2 3 4 5 6 7 8 9 +2B
P1 P2 P3 P4 P5 P6
FO/FC
DP
Board Baseball