Block Schematics – an early draft

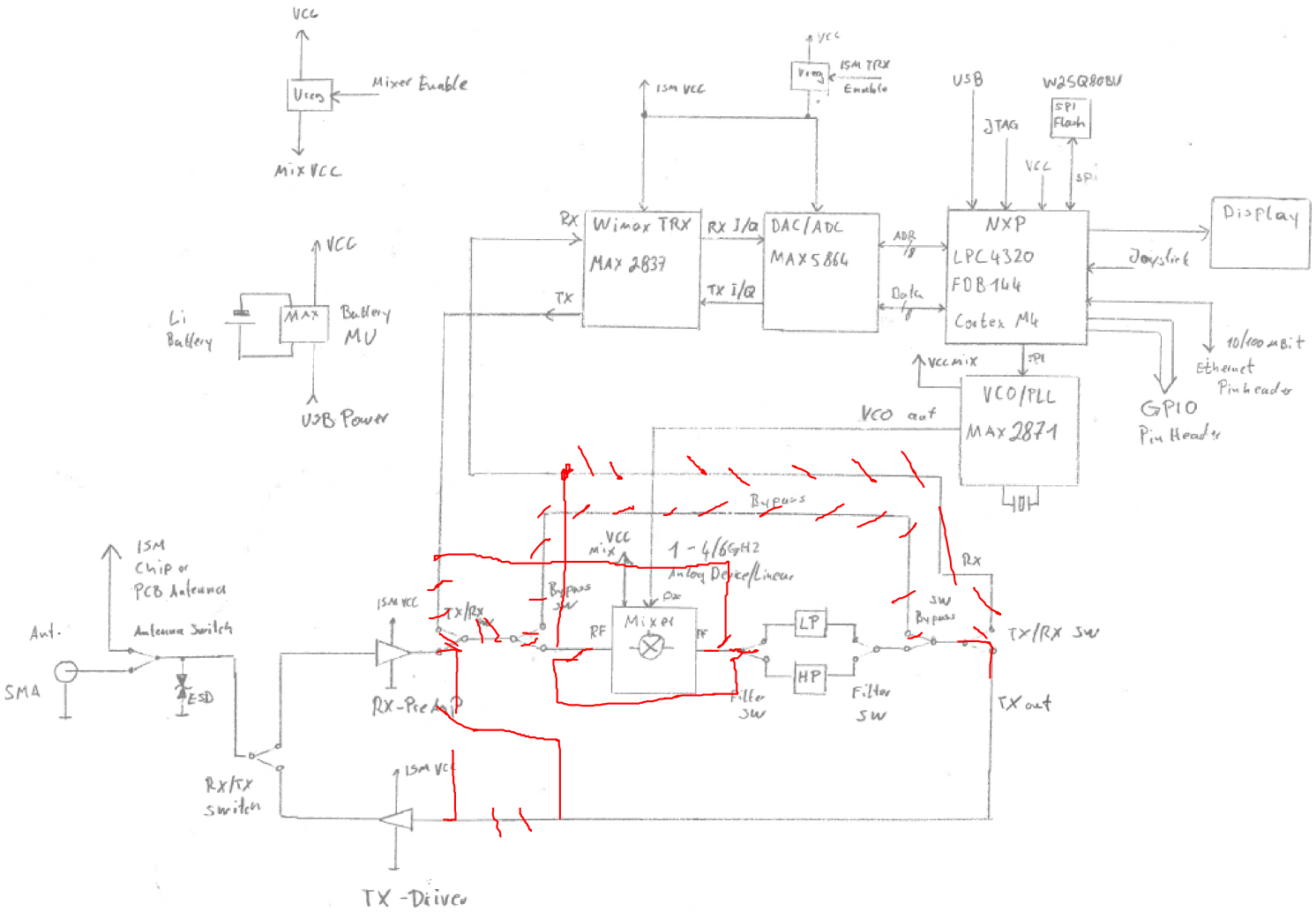

maxim integrated™