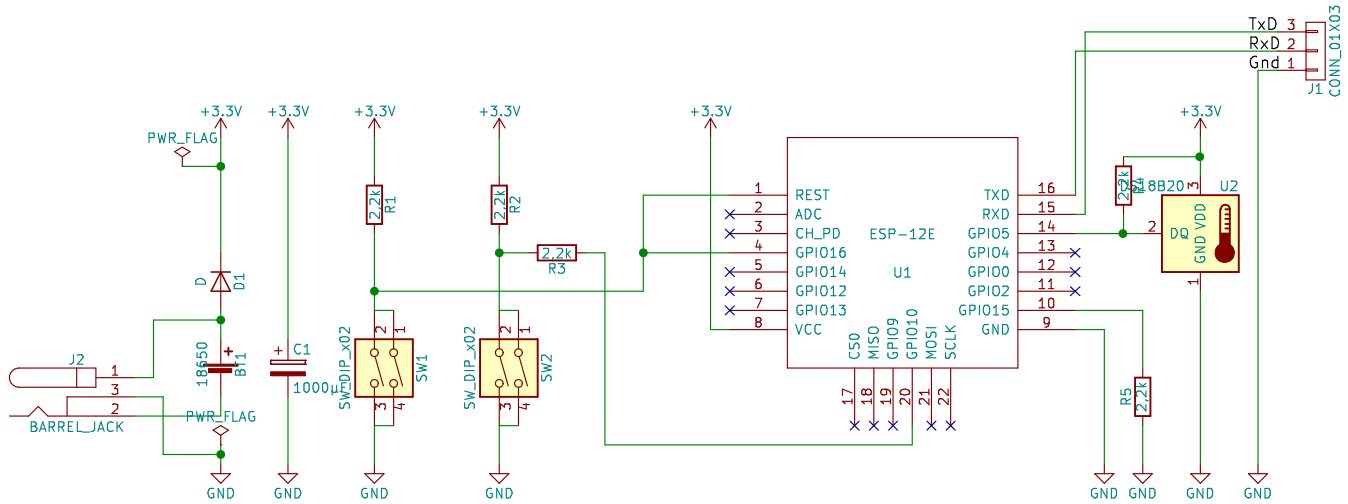

Sheet: /
File: ltl.sch

Title: Long Term Temperatur Logger (LTL)

Size: A4	Date:	**Rev: 1.0**
KiCad E.D.A. kicad 4.0.6+dfsg1-1		Id: 1/1