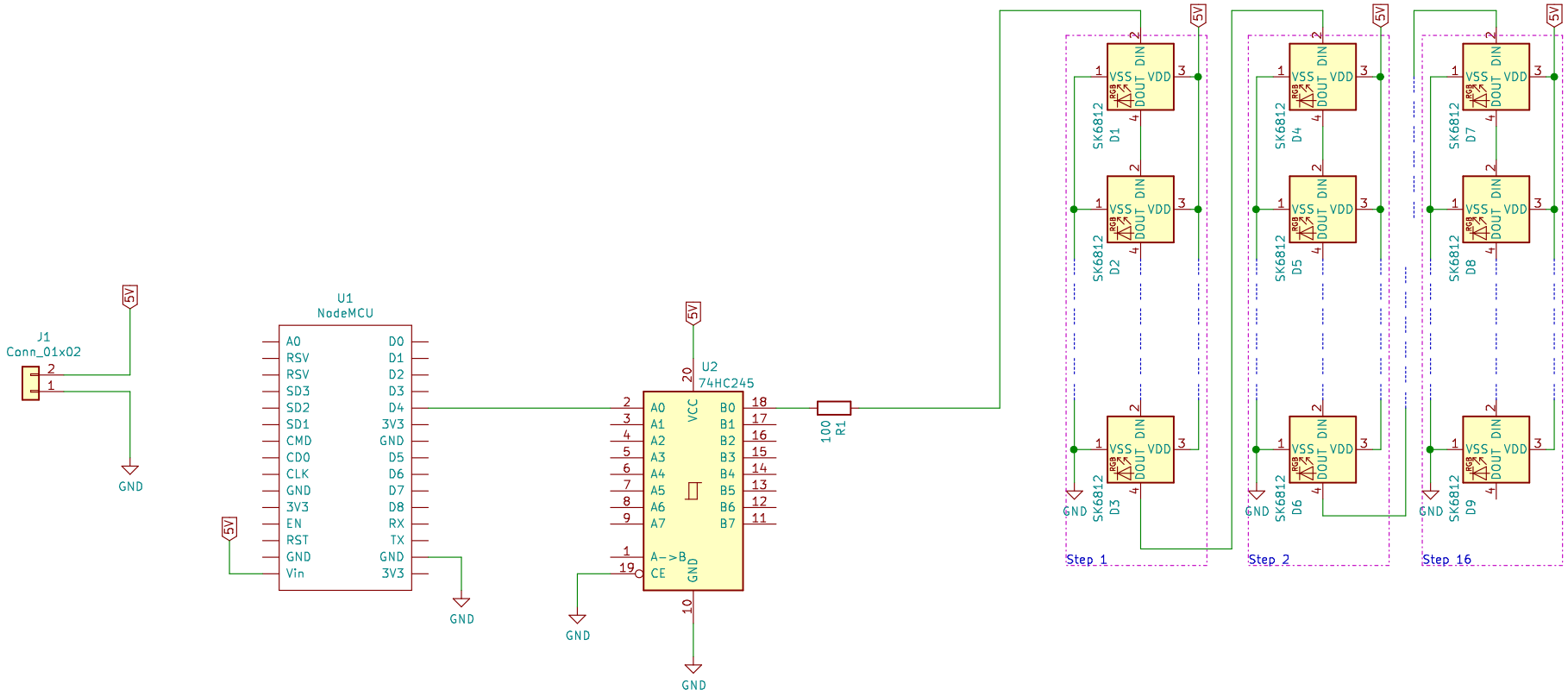

Sheet: /
File: RGBW_Stairlight.sch

Title:

Size: A4	Date:	Rev:
KiCad E.D.A. kicad 5.0.1-33cea8e68ubuntu18.04.1		Id: 1/1