MINI ORB®

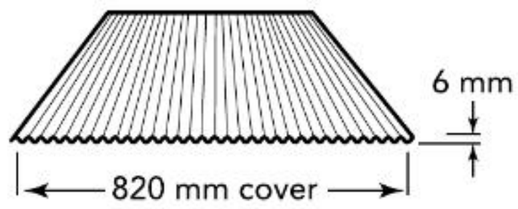

FINISH
ZINCALUME® steel
ZINCALUME® steel perforated
COLORBOND® steel
COLORBOND® Ultra steel
COLORBOND® steel Matt
COLORBOND® Metallic steel Corstrip
COLORBOND® steel perforated Corstrip - Surfmist® only

To convert price to **lineal metres multiply** by 0.820

Maximum length = 6000mm, Minimum Rollformed length = 305mm

MINI ORB® FASTENERS (PAN FIXING – WALL APPLICATION ONLY)

	APPLICATION
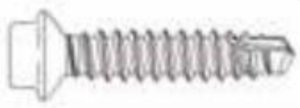	Steel up to 3.0mm BMT
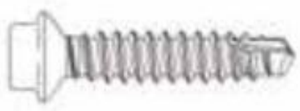	Timber – Softwood
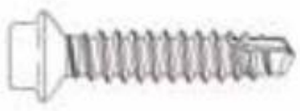	Timber – Hardwood

WALLING METAL TRIMS

PROFILE	PRODUCT	SUITABLE FOR
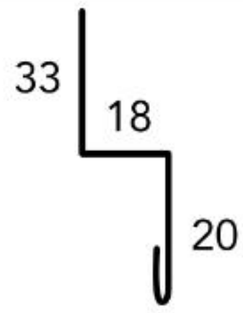	CD 21 Butt Joint Trim – Overlap	MULTICLAD® (1)
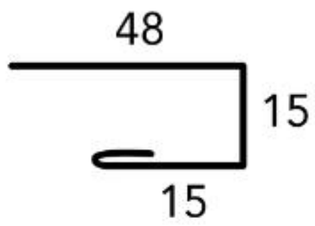	CD 22 Edge Trim	MULTICLAD® (2) MINI ORB® (1)
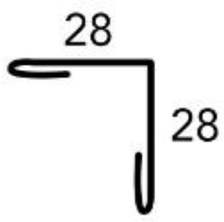	CD 23 External Corner	PANELRIB® MULTICLAD® (1) 2PF 300 (1) MINI ORB®
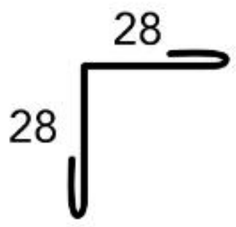	CD 24 Internal Corner	PANELRIB® MULTICLAD® (1) MINI ORB® 2PF 300 (1)
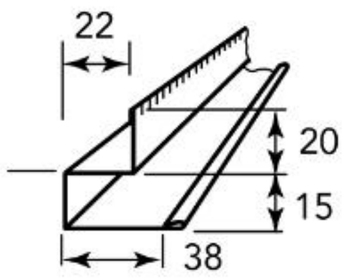	CD 27 Fascia to Soffit Section	PANELRIB® MULTICLAD® MINI ORB®
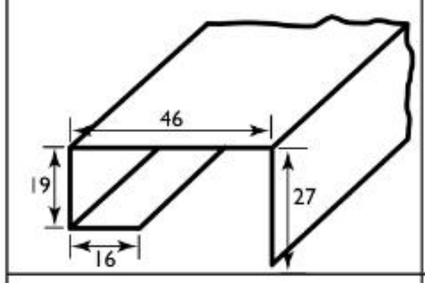	CD 30 Fascia Capping	TRIMWALL® (3) PANELRIB® (3) MULTICLAD® (3) MINI ORB® (3) 2PF 300 (3)
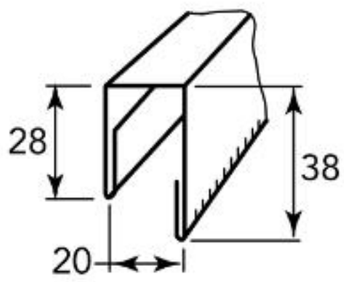	CD 39 Trim Channel	2PF 300
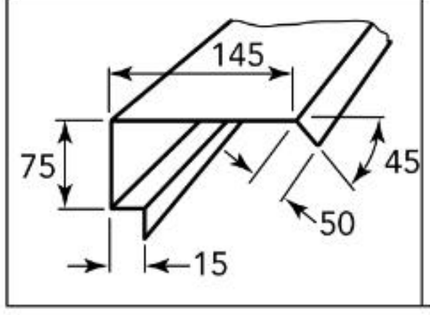	EC 3 Fascia Capping	TRIMWALL® (3) PANELRIB® (3) MULTICLAD® (3) MINI ORB® (3) 2PF 300 (3)

Notes:
1. Suitable only to these profiles in certain applications.
2. Fit may be tight.
3. Suitable depending on support details.
4. Minimum length is = 300mm. Maximum length is = 4800mm.

WALLING METAL TRIMS

PROFILE	PRODUCT	SUITABLE FOR
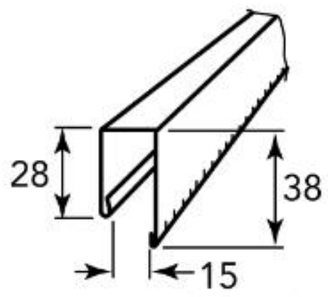	CD 1 Trim Channel	MULTICLAD®
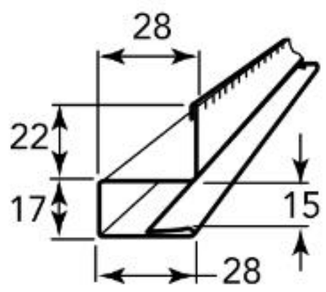	CD 3 Fascia to Soffit Section	PANELRIB® MULTICLAD® MINI ORB®
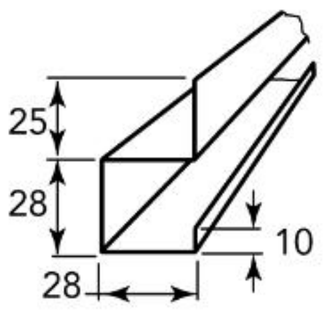	CD 4 Feature Section Soffit**	PANELRIB® MULTICLAD® MINI ORB®
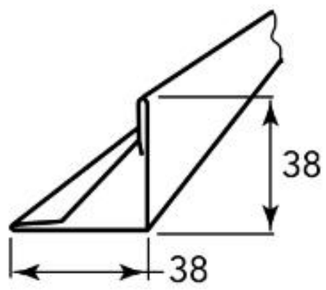	CD 5 External Corner Trim	PANELRIB® (*) MULTICLAD® MINI ORB® (*) 2PF 300
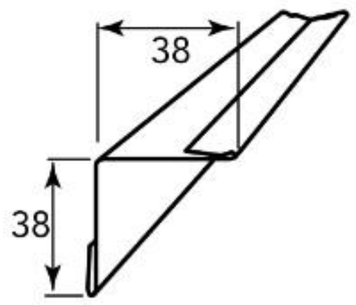	CD 6 Internal Corner Trim	PANELRIB® (*) MULTICLAD® MINI ORB® (*) 2PF 300

Notes:
1. *Suitable only to these profiles in certain applications.
2. **CD4 - maximum length of 4 metres (subject to enquiry).
3. Minimum length = 300mm, Maximum length = 4800mm.