	PROJECT NAME	IoT GATEWAY - EC25 BASED WITH WiFi
	PCB NAME	IoT GATEWAY - EC25 MODEM BOARD AND FC20 WiFi BOARD
	PCB NO	CMS 938 REV_0

TABLE OF CONTENTS

SL.NO	PAGE NO.	DESCRIPTION
1	Page 1	TABLE OF CONTENTS
2	Page 2	BLOCK DIAGRAM
3	Page 3	NON - ISOLATED POWER SUPPLY SECTION
4	Page 4	EC25 MODEM MODULE SECTION
5	Page 5	SD CARD AND SIM CARD SECTION
6	Page 6	WDT, CONSOLE AND RTC SECTION
7	Page 7	ISOLATED RS232 AND RS485 SECTION
8	Page 8	DI, DO AND CONNECTOR SECTION
9	Page 9	FC20 WiFi MODULE SECTION
10	Page 10	LED SECTION

REVISION HISTORY

SL.NO	Rev No	Date	Designed By	Description of Revision Changes
1	Rev 0	06-09-2024	GIRIDHAR G	Initial Version

	Name	CREATIVE MICRO SYSTEMS No 300B 4th Phase 5th Main Peenya Industrial Area, Bangalore-58	Format No: DC/DE/81/01 Issue No : 00 Rev No : 01 Date : 01-07-2007
Designed By		Title: TABLE OF CONTENT	
Verified By		Doc No: 331 701 / PCB No: CMS 938	Rev No: 0
Approved By		Size: A4 / Date: Monday, September 09, 2024	Sheet 1 of 10

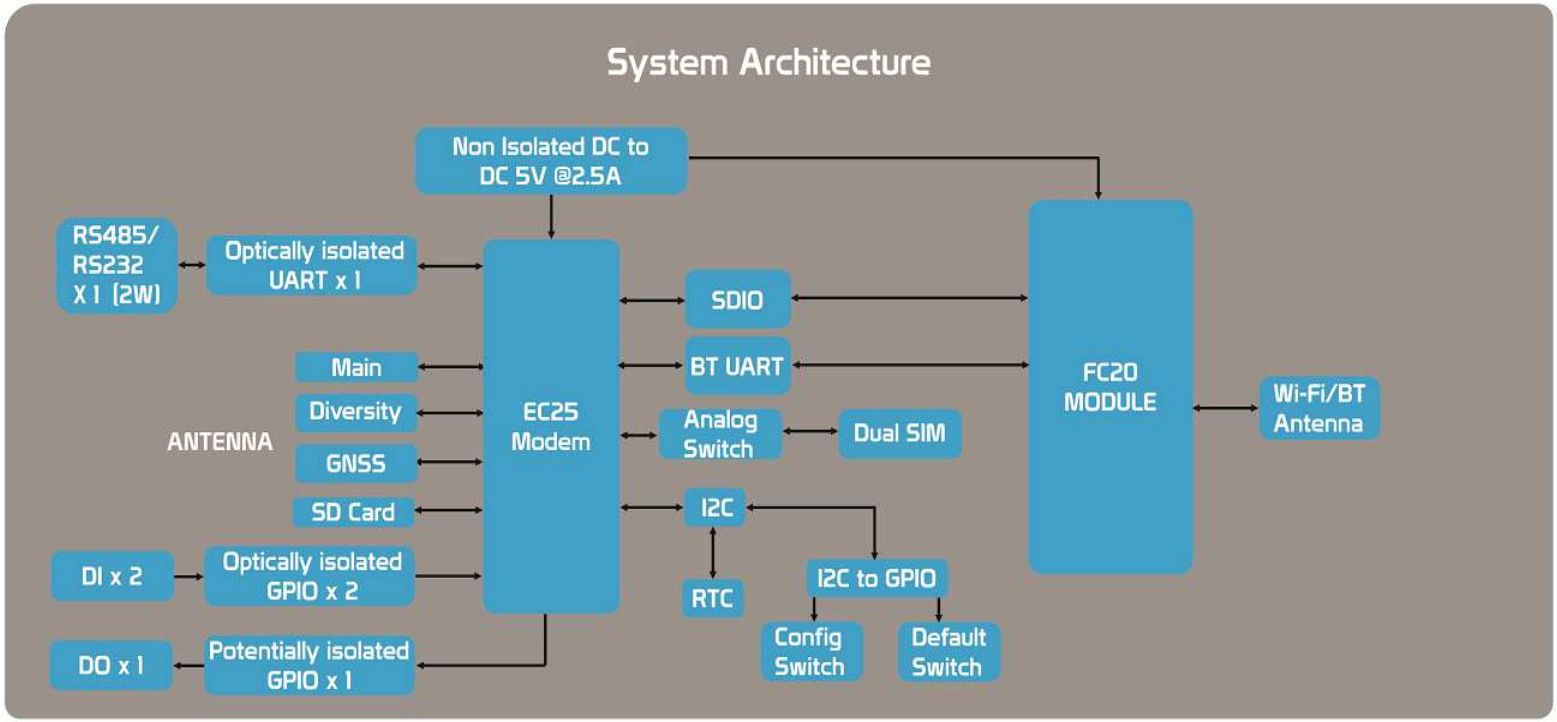

CMS	Name	CREATIVE MICRO SYSTEMS No 300B 4th Phase 5th Main Peenya Industrial Area, Bangalore-58	Format No: DC/DE/81/01 Issue No : 00 Rev No : 01 Date : 01-07-2007
Designed By		Title: BLOCK DIAGRAM	
Verified By		Doc No: 331 701 / PCB No: CMS 938	Rev No: 0
Approved By		Size: A4 / Date: Monday, September 09, 2024	Sheet 2 of 10

NON ISOLATED DC-DC CONVERTOR (VOUT: 5V @2.5A MAX)

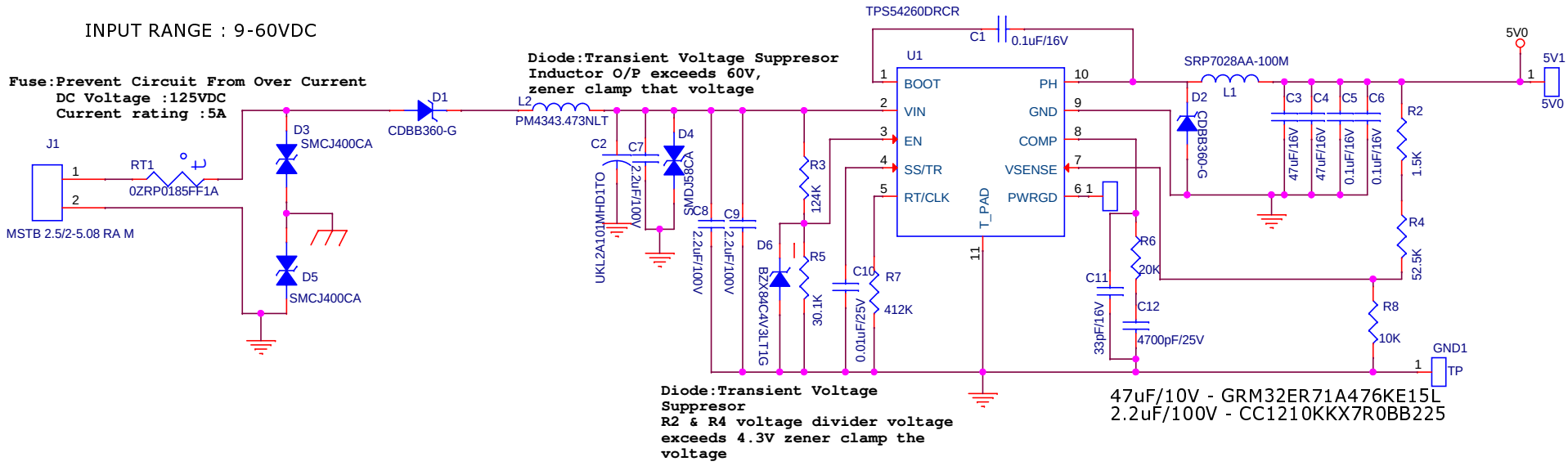

3.8V REGULATOR FOR EC25 MODULE

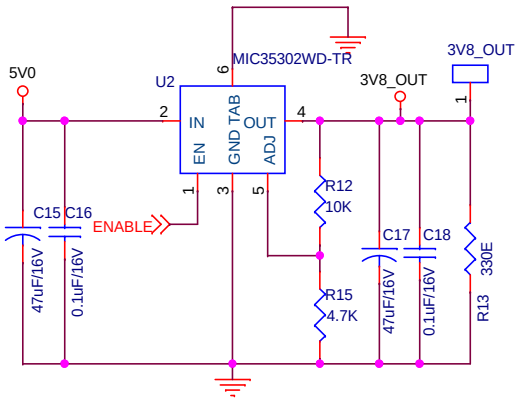

3 V REGULATOR FOR MICRO SD CARD

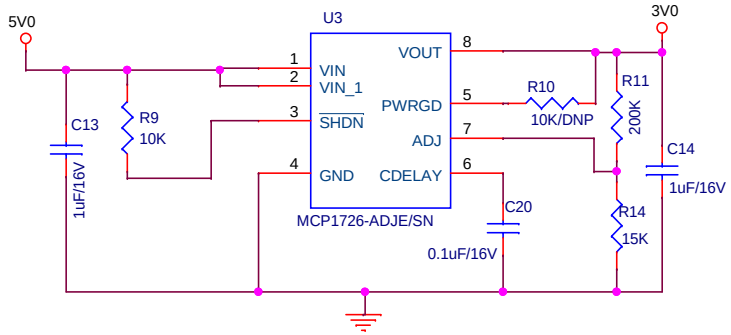

CMS	Name	CREATIVE MICRO SYSTEMS No 300B 4th Phase 5th Main Peenya Industrial Area, Bangalore-58	Format No: DC/DE/81/01 Issue No : 00 Rev No : 01 Date : 01-07-2007
Designed By		Title: POWER SUPPLY SECTION	
Verified By		Doc No: 331 701 / PCB No: CMS 938	Rev No: 0
Approved By		Size: A4 / Date: Friday, September 06, 2024	Sheet 3 of 10

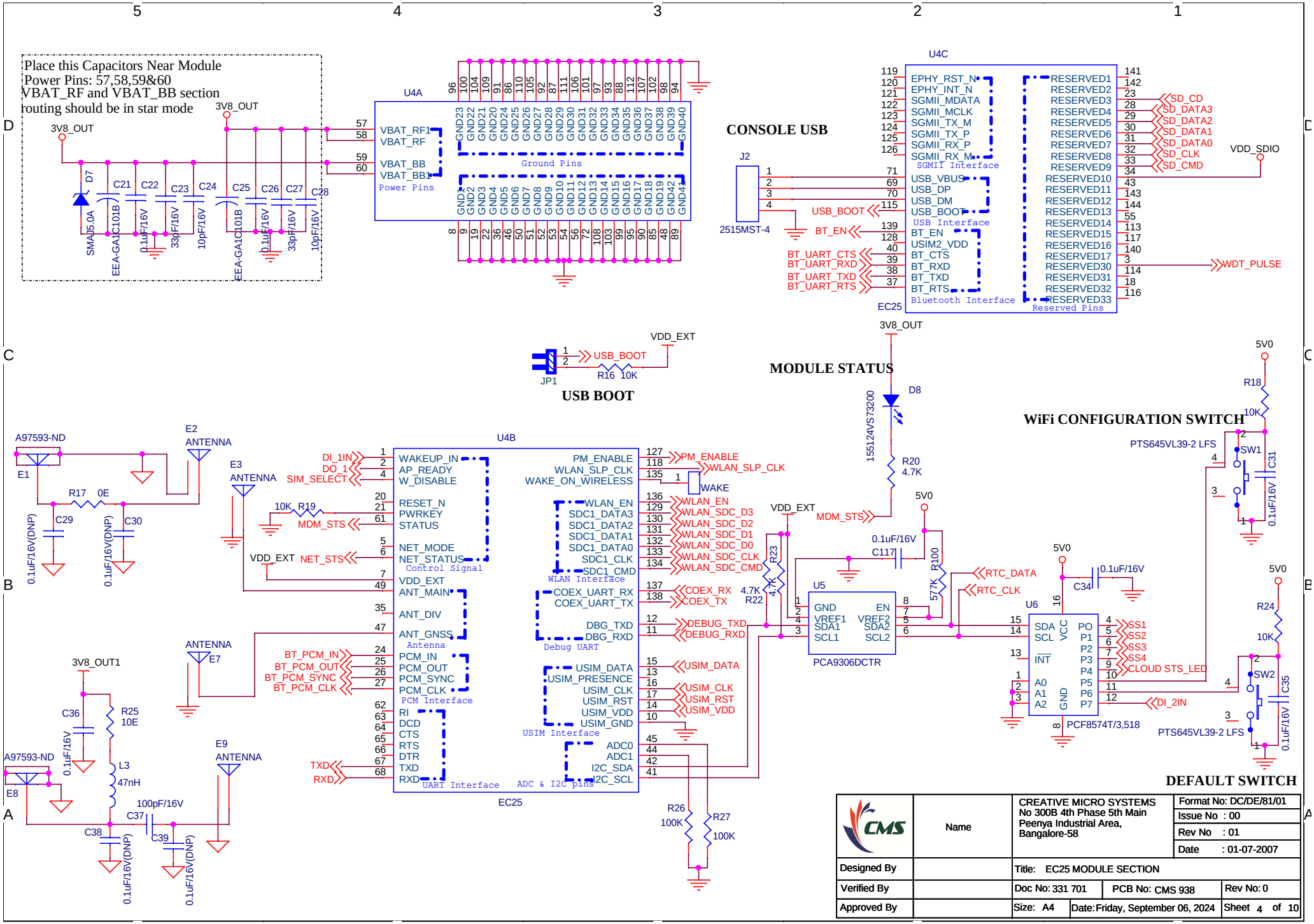

CMS	Name	CREATIVE MICRO SYSTEMS No 300B 4th Phase 5th Main Peenya Industrial Area, Bangalore-58	Format No: DC/DE/81/01 Issue No : 00 Rev No : 01 Date : 01-07-2007
Designed By		Title: EC25 MODULE SECTION	
Verified By		Doc No: 331 701 / PCB No: CMS 938	Rev No: 0
Approved By		Size: A4 / Date: Friday, September 06, 2024	Sheet 4 of 10

Micro SD CARD SECTION

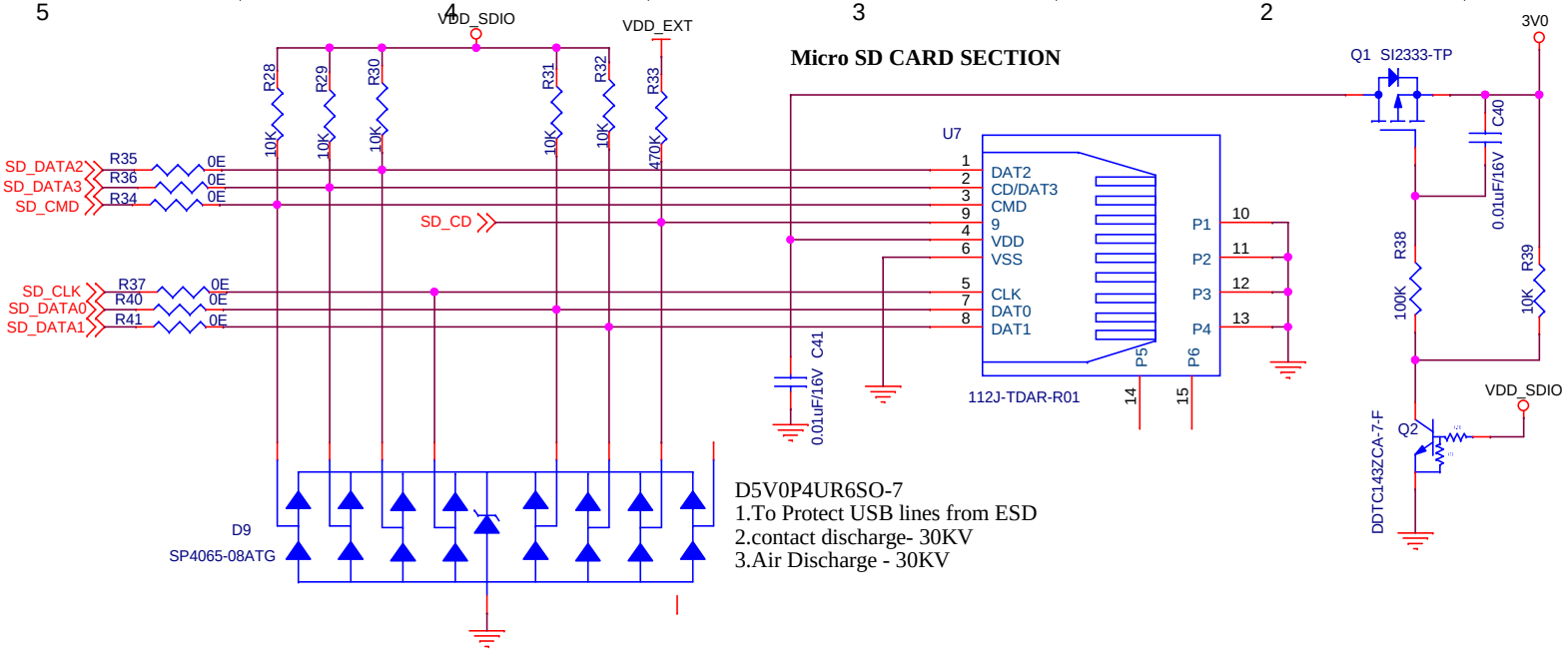

D5V0P4UR6SO-7
1.To Protect USB lines from ESD
2.contact discharge- 30KV
3.Air Discharge - 30KV

SIM CARD SECTION

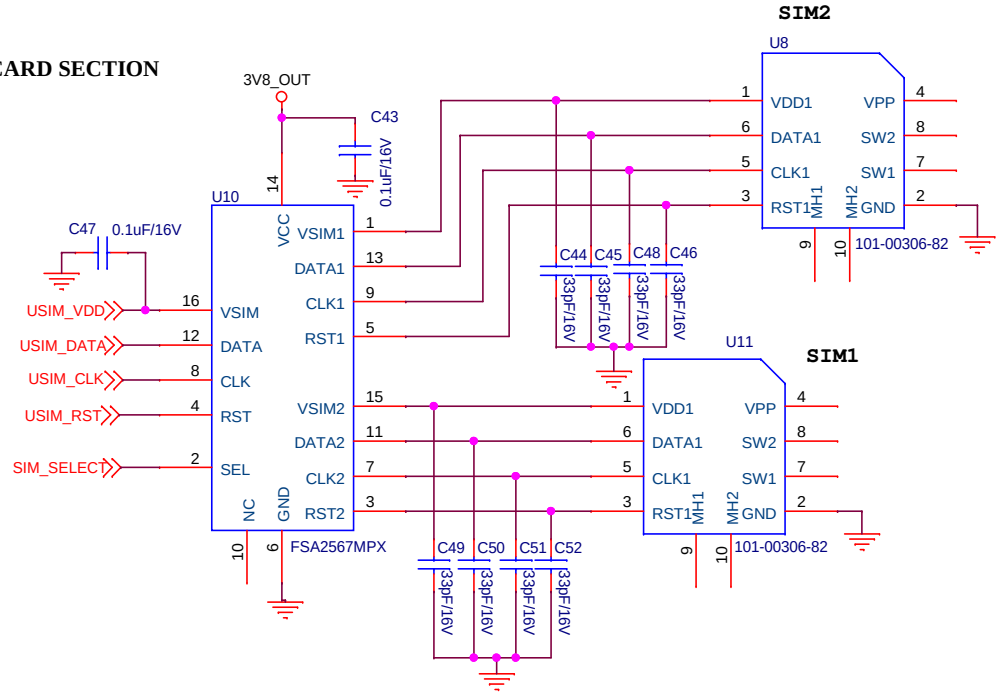

SIM Select = High ---> SIM1 Enable(U11)
SIM Select = Low ---> SIM2 Enable(U8)

SIM CARD LED

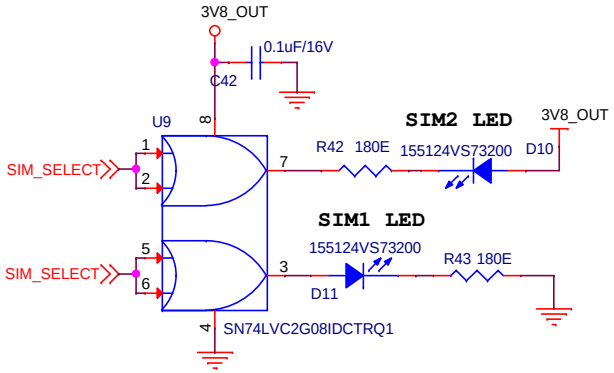

CMS	Name	CREATIVE MICRO SYSTEMS No 300B 4th Phase 5th Main Peenya Industrial Area, Bangalore-58	Format No: DC/DE/81/01
			Issue No : 00
			Rev No : 01
			Date : 01-07-2007
Designed By		Title: SIM CARD AND SD CARD SECTION	
Verified By		Doc No: 331 701	PCB No: CMS 938 Rev No: 0
Approved By		Size: A4	Date: Thursday, September 05, 2024 Sheet 5 of 10

WDT SECTION

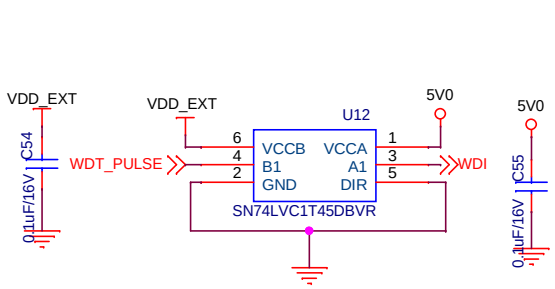

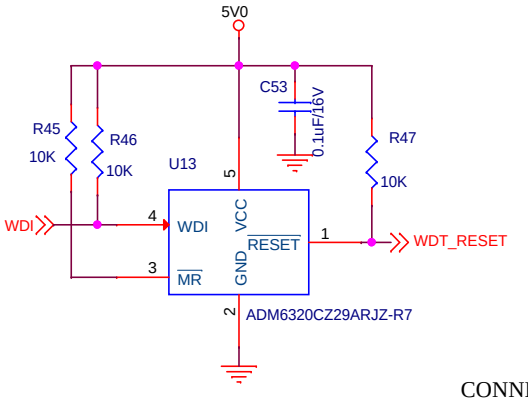

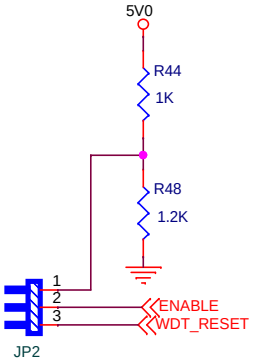

CONNECT JP1.1 AND JP1.2 WDT DISABLE
CONNECT JP1.2 AND JP1.3 WDT ENABLE

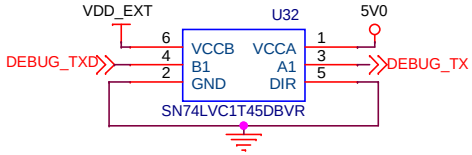

CONSOLE SECTION

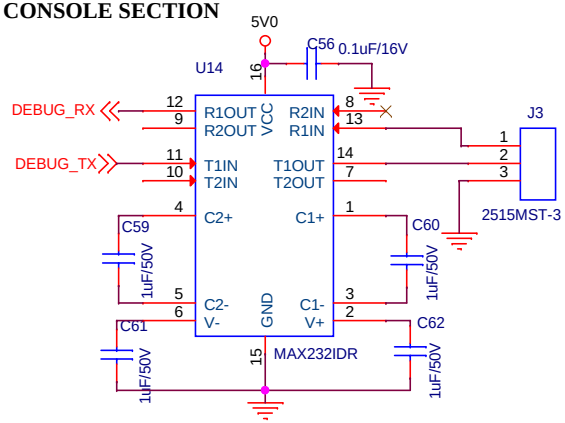

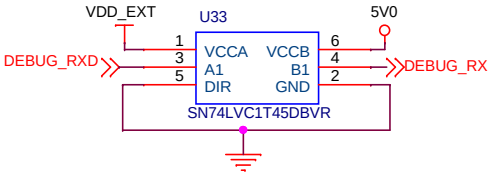

5V0 ISOLATION FOR RS232 AND RS 485

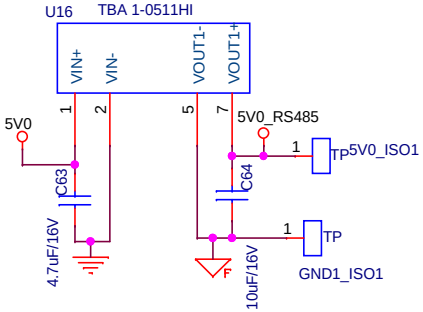

RTC SECTION

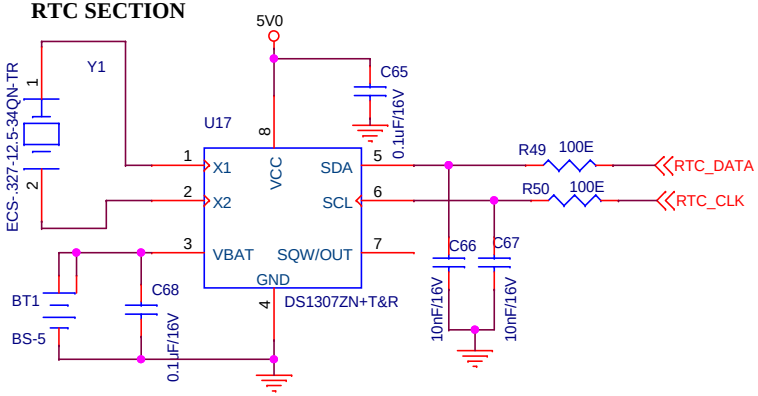

CMS	Name	CREATIVE MICRO SYSTEMS No 300B 4th Phase 5th Main Peenya Industrial Area, Bangalore-58	Format No: DC/DE/81/01 Issue No : 00 Rev No : 01 Date : 01-07-2007
Designed By		Title: WDT, CONSOLE SECTION AND RTC	
Verified By		Doc No: 331 701	PCB No: CMS 938 / Rev No: 0
Approved By		Size: A4	Date: Friday, September 06, 2024 / Sheet 6 of 10

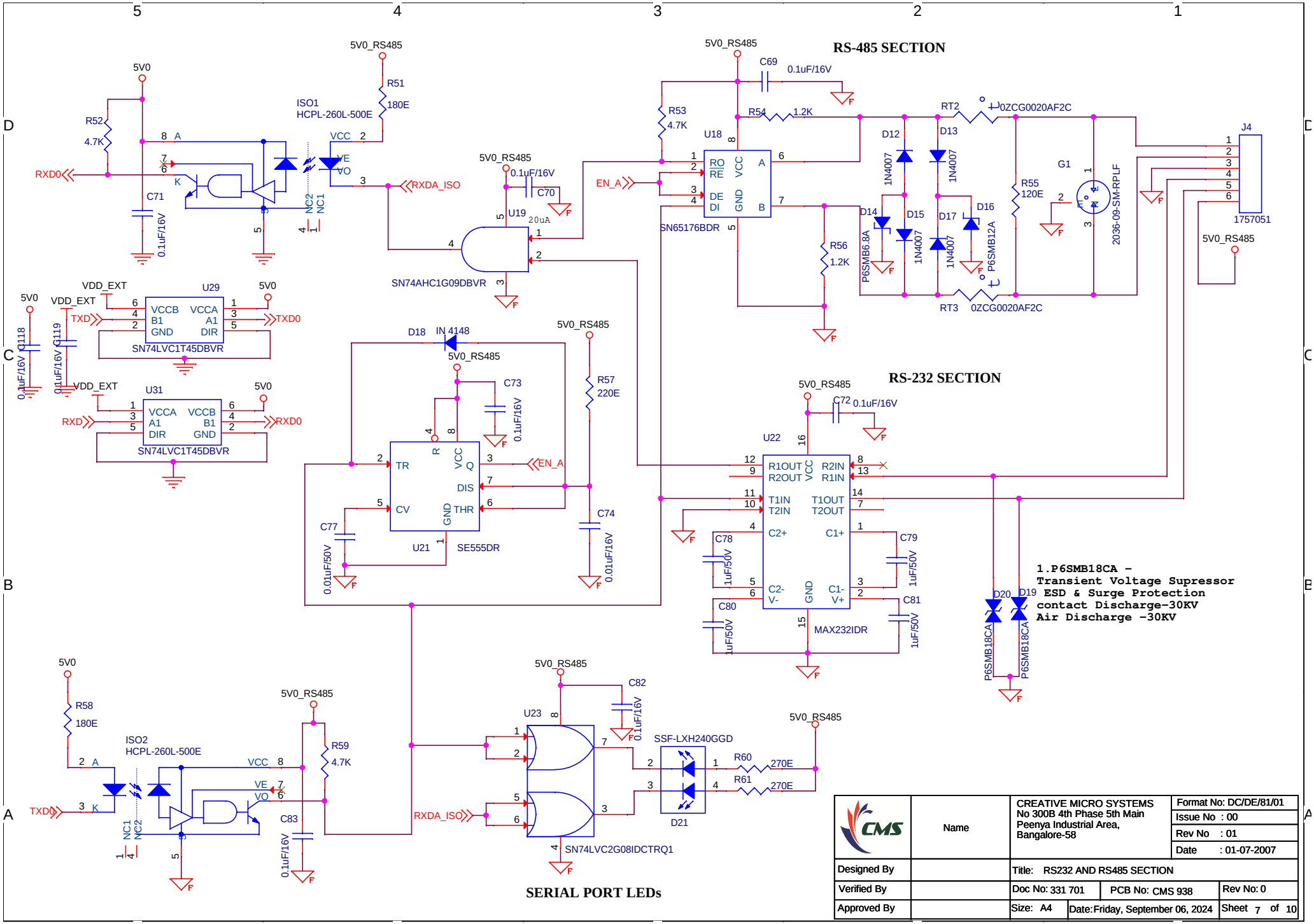
RS-485 SECTION
RS-232 SECTION
SERIAL PORT LEDs
5V0
5V0_RS485
VDD_EXT
ISO1
HCPL-260L-500E
ISO2
HCPL-260L-500E
SN74AHC1G09DBVR
SN65176BDR
SN74LVC1T45DBVR
SE555DR
MAX232IDR
SN74LVC2G08IDCTRQ1
SSF-LXH240GGD
1N4007
P6SMB6.8A
P6SMB12A
P6SMB18CA
2036-09-SM-RPLF
1757051
0ZCG0020AF2C
RXD0
TXD0
RXDA_ISO
EN_A
1.P6SMB18CA –
Transient Voltage Supressor
ESD & Surge Protection
contact Discharge-30KV
Air Discharge -30KV
CREATIVE MICRO SYSTEMS
No 300B 4th Phase 5th Main
Peenya Industrial Area,
Bangalore-58
Format No: DC/DE/81/01
Issue No : 00
Rev No : 01
Date : 01-07-2007
Designed By
Verified By
Approved By
Name
Title: RS232 AND RS485 SECTION
Doc No: 331 701
PCB No: CMS 938
Rev No: 0
Size: A4
Date: Friday, September 06, 2024
Sheet 7 of 10

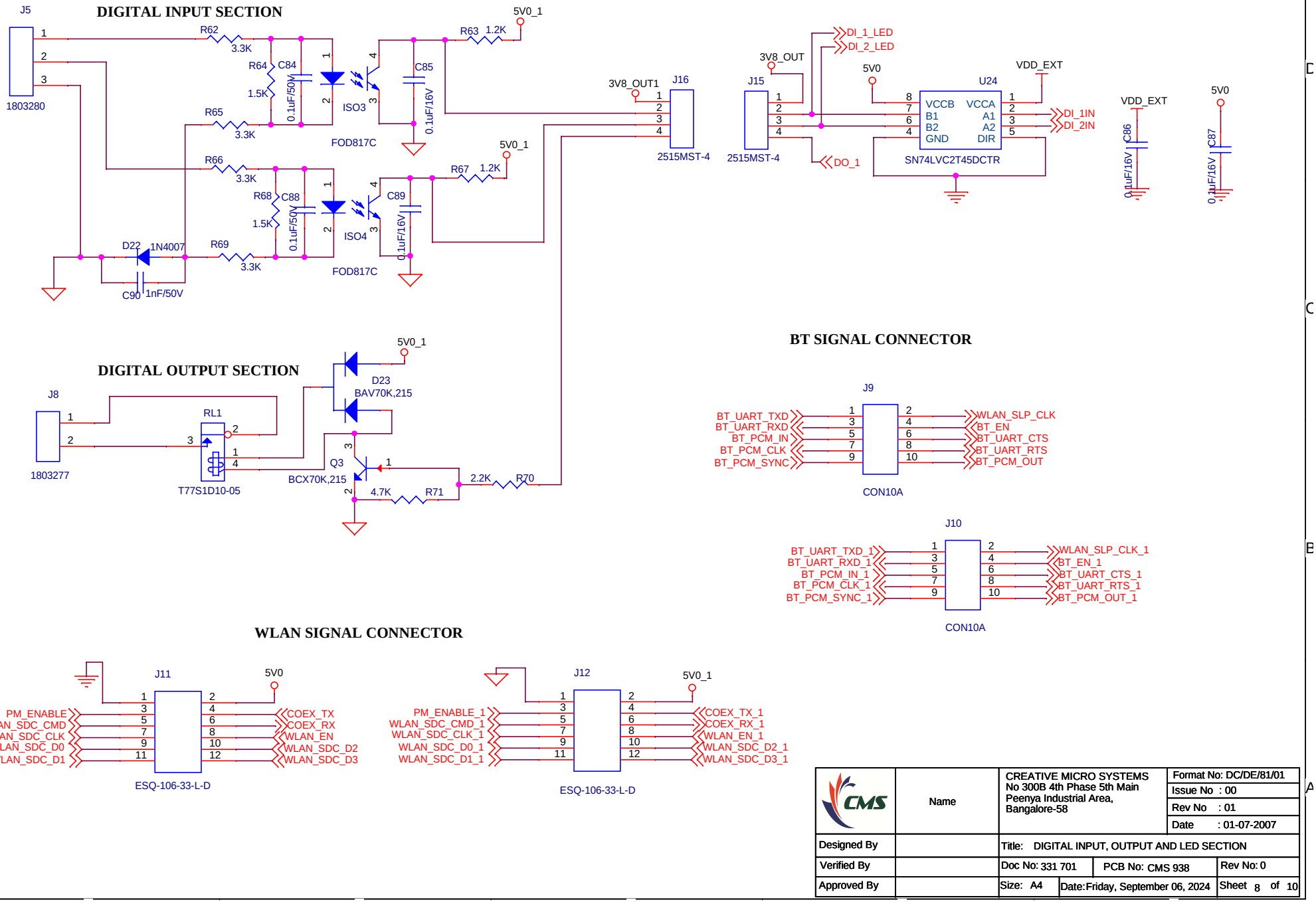
DIGITAL INPUT SECTION
J5
1803280
R62 3.3K
R64 1.5K
C84 0.1uF/50V
R65 3.3K
R66 3.3K
R68 1.5K
C88 0.1uF/50V
R69 3.3K
D22 1N4007
C90 1nF/50V
ISO3
ISO4
FOD817C
FOD817C
5V0_1
R63 1.2K
C85 0.1uF/16V
R67 1.2K
C89 0.1uF/16V
3V8_OUT1
J16
2515MST-4
3V8_OUT
J15
2515MST-4
DI_1_LED
DI_2_LED
DO_1
5V0
U24
VCCB
B1
B2
GND
VCCA
A1
A2
DIR
SN74LVC2T45DCTR
DI_1IN
DI_2IN
VDD_EXT
C86 0.1uF/16V
C87 0.1uF/16V
DIGITAL OUTPUT SECTION
J8
1803277
RL1
T77S1D10-05
D23
BAV70K,215
Q3
BCX70K,215
2.2K R70
4.7K R71
BT SIGNAL CONNECTOR
J9
BT_UART_TXD
BT_UART_RXD
BT_PCM_IN
BT_PCM_CLK
BT_PCM_SYNC
WLAN_SLP_CLK
BT_EN
BT_UART_CTS
BT_UART_RTS
BT_PCM_OUT
CON10A
J10
BT_UART_TXD_1
BT_UART_RXD_1
BT_PCM_IN_1
BT_PCM_CLK_1
BT_PCM_SYNC_1
WLAN_SLP_CLK_1
BT_EN_1
BT_UART_CTS_1
BT_UART_RTS_1
BT_PCM_OUT_1
CON10A
WLAN SIGNAL CONNECTOR
J11
PM_ENABLE
WLAN_SDC_CMD
WLAN_SDC_CLK
WLAN_SDC_D0
WLAN_SDC_D1
COEX_TX
COEX_RX
WLAN_EN
WLAN_SDC_D2
WLAN_SDC_D3
ESQ-106-33-L-D
J12
PM_ENABLE_1
WLAN_SDC_CMD_1
WLAN_SDC_CLK_1
WLAN_SDC_D0_1
WLAN_SDC_D1_1
COEX_TX_1
COEX_RX_1
WLAN_EN_1
WLAN_SDC_D2_1
WLAN_SDC_D3_1
ESQ-106-33-L-D
CMS
Name
CREATIVE MICRO SYSTEMS
No 300B 4th Phase 5th Main
Peenya Industrial Area,
Bangalore-58
Format No: DC/DE/81/01
Issue No : 00
Rev No : 01
Date : 01-07-2007
Designed By
Verified By
Approved By
Title: DIGITAL INPUT, OUTPUT AND LED SECTION
Doc No: 331 701
PCB No: CMS 938
Rev No: 0
Size: A4
Date: Friday, September 06, 2024
Sheet 8 of 10

1.8V REGULATOR FOR FC20 MODULE

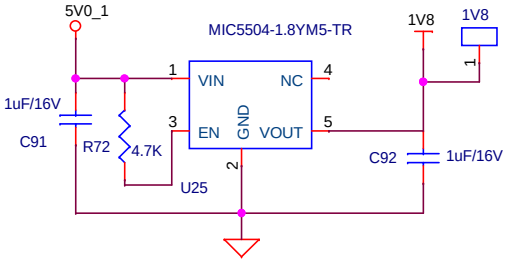

3.3V REGULATOR FOR FC20 MODULE

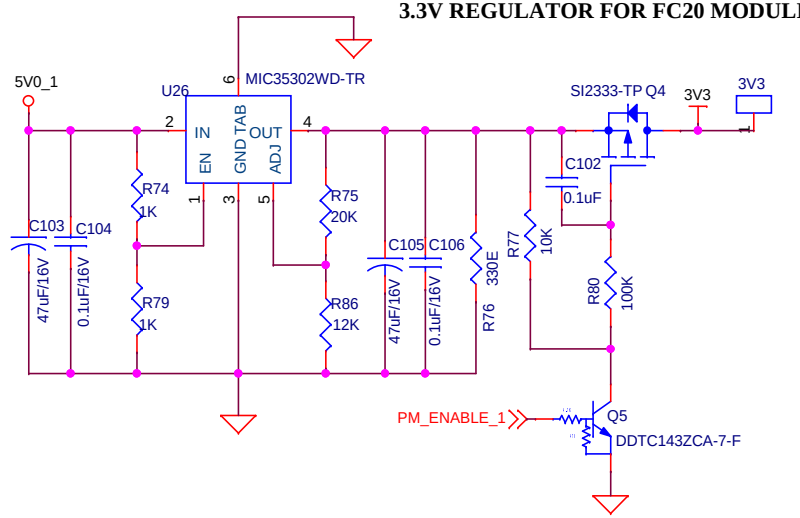

FC20 MODULE

Place these Capacitors close to the power pins of the FC20 module

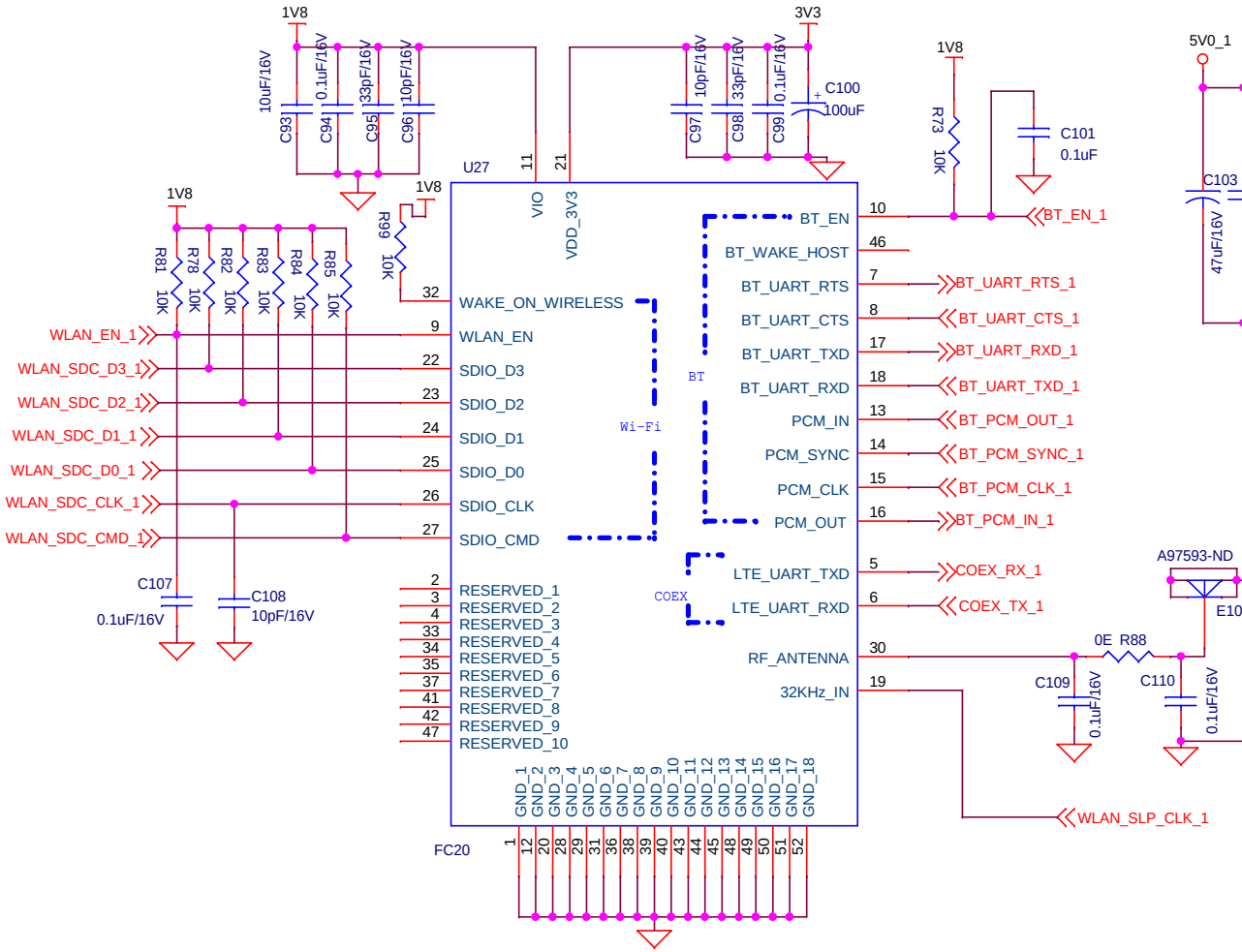

CMS	Name	CREATIVE MICRO SYSTEMS No 300B 4th Phase 5th Main Peenya Industrial Area, Bangalore-58	Format No: DC/DE/81/01 Issue No : 00 Rev No : 01 Date : 01-07-2007
Designed By		Title: DIGITAL INPUT, OUTPUT AND LED SECTION	
Verified By		Doc No: 331 701 / PCB No: CMS 938	Rev No: 0
Approved By		Size: A4 / Date: Thursday, September 05, 2024	Sheet 9 of 10

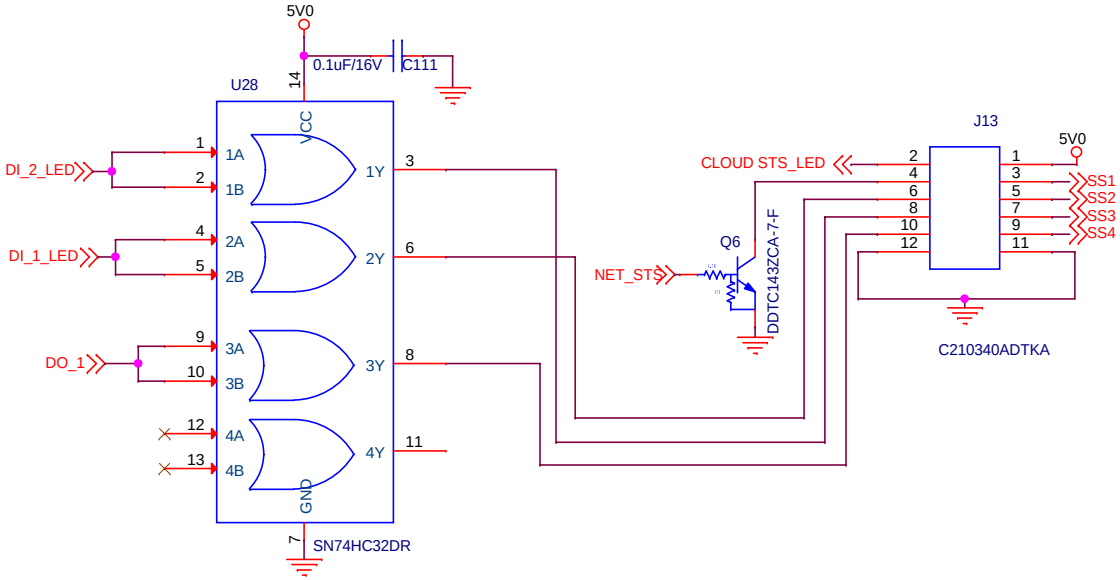

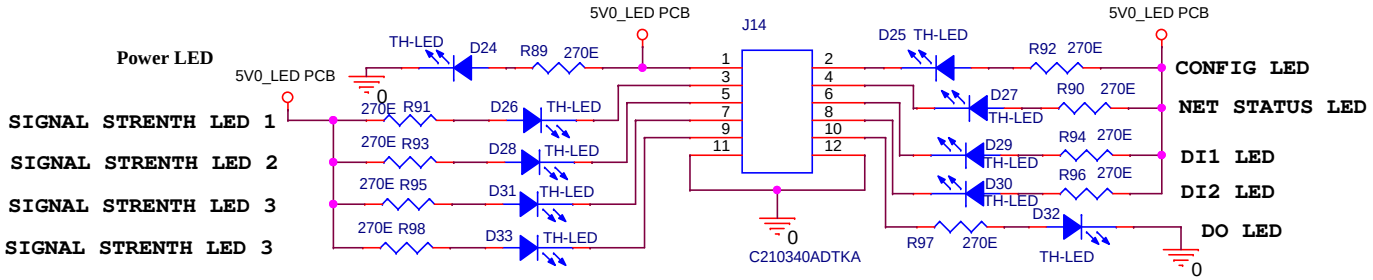

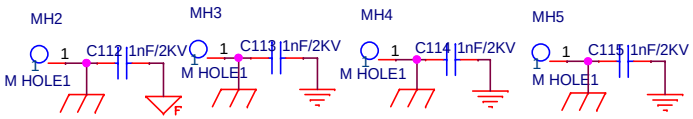

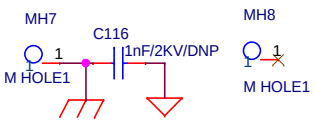

CMS	Name	CREATIVE MICRO SYSTEMS No 300B 4th Phase 5th Main Peenya Industrial Area, Bangalore-58	Format No: DC/DE/81/01 Issue No : 00 Rev No : 01 Date : 01-07-2007
Designed By		Title: LED SECTION	
Verified By		Doc No: 331 701 / PCB No: CMS 938	Rev No: 0
Approved By		Size: A4 / Date: Friday, September 06, 2024	Sheet 10 of 10