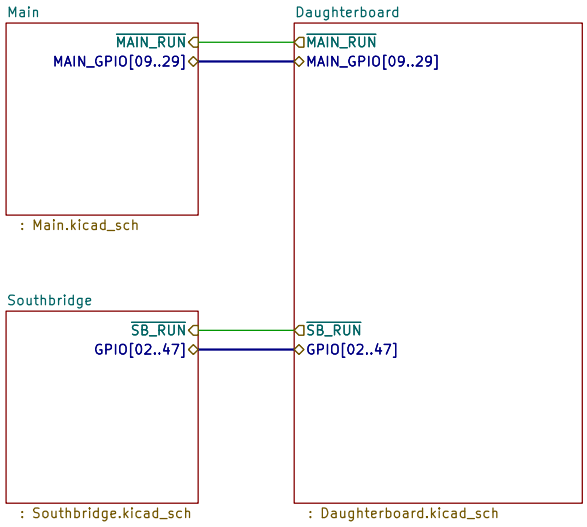

VUSB : 5.0V (typical)
VIN : 5.5 – 3.0V
VBAT : 4.2 – 3.0V
3V3 : 3.3V (typical)

Sheet: /		
File: pico_concole_v2_daughter_board.kicad_sch		
Title:		
Size: A4	Date:	**Rev:**
KiCad E.D.A. 9.0.4		Id: 1/4

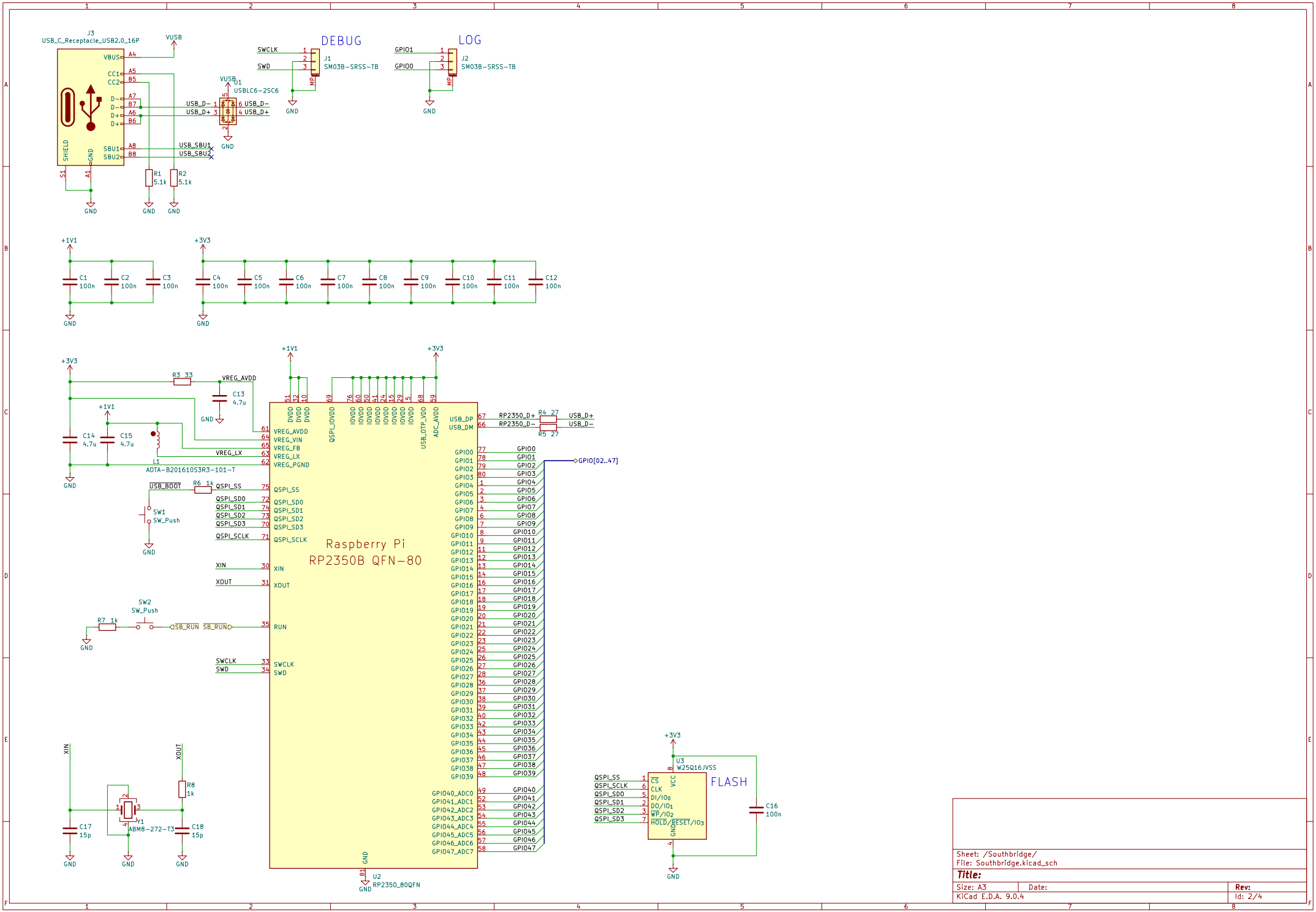
J3
USB_C_Receptacle_USB2.0_16P
VUSB
VBUS
CC1
CC2
D-
D-
D+
D+
SHIELD
GND
SBU1
SBU2
S1
A1
R1 5.1k
R2 5.1k
U1
USBLC6-2SC6
USB_D-
USB_D+
USB_SBU1
USB_SBU2
DEBUG
SWCLK
SWD
J1
SM03B-SRSS-TB
LOG
GPIO1
GPIO0
J2
SM03B-SRSS-TB
+1V1
+3V3
C1 100n
C2 100n
C3 100n
C4 100n
C5 100n
C6 100n
C7 100n
C8 100n
C9 100n
C10 100n
C11 100n
C12 100n
R3 33
VREG_AVDD
C13 4.7u
C14 4.7u
C15 4.7u
L1
AOTA-B201610S3R3-101-T
VREG_LX
USB_BOOT
R6 1k
SW1
SW_Push
SW2
SW_Push
R7 1k
SB_RUN
XIN
XOUT
R8 1k
Y1
ABM8-272-T3
C17 15p
C18 15p
Raspberry Pi
RP2350B QFN-80
U2
RP2350_80QFN
RP2350_D+
RP2350_D-
R4 27
R5 27
USB_D+
USB_D-
GPIO[02..47]
U3
W25Q16JVSS
FLASH
QSPI_SS
QSPI_SCLK
QSPI_SD0
QSPI_SD1
QSPI_SD2
QSPI_SD3
C16 100n
Sheet: /Southbridge/
File: Southbridge.kicad_sch
Title:
Size: A3
Date:
Rev:
KiCad E.D.A. 9.0.4
Id: 2/4

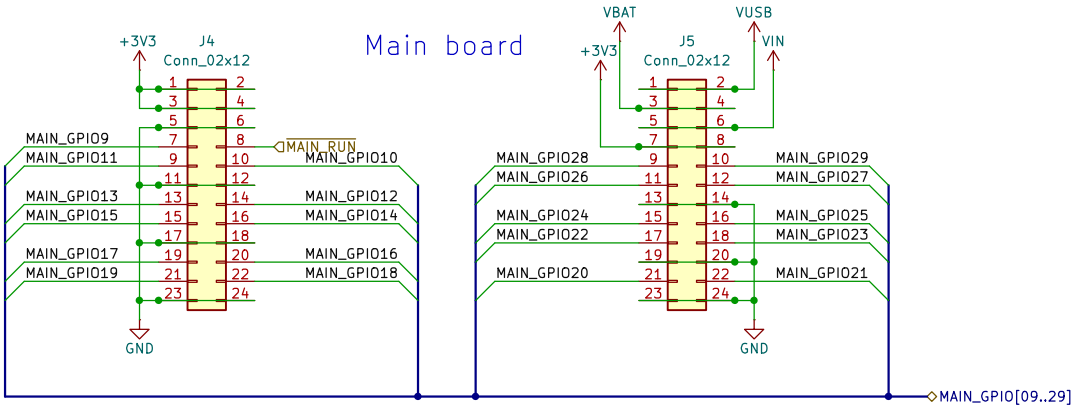

Sheet: /Main/
File: Main.kicad_sch

Title:

Size: A4	Date:	**Rev:**
KiCad E.D.A. 9.0.4		Id: 3/4

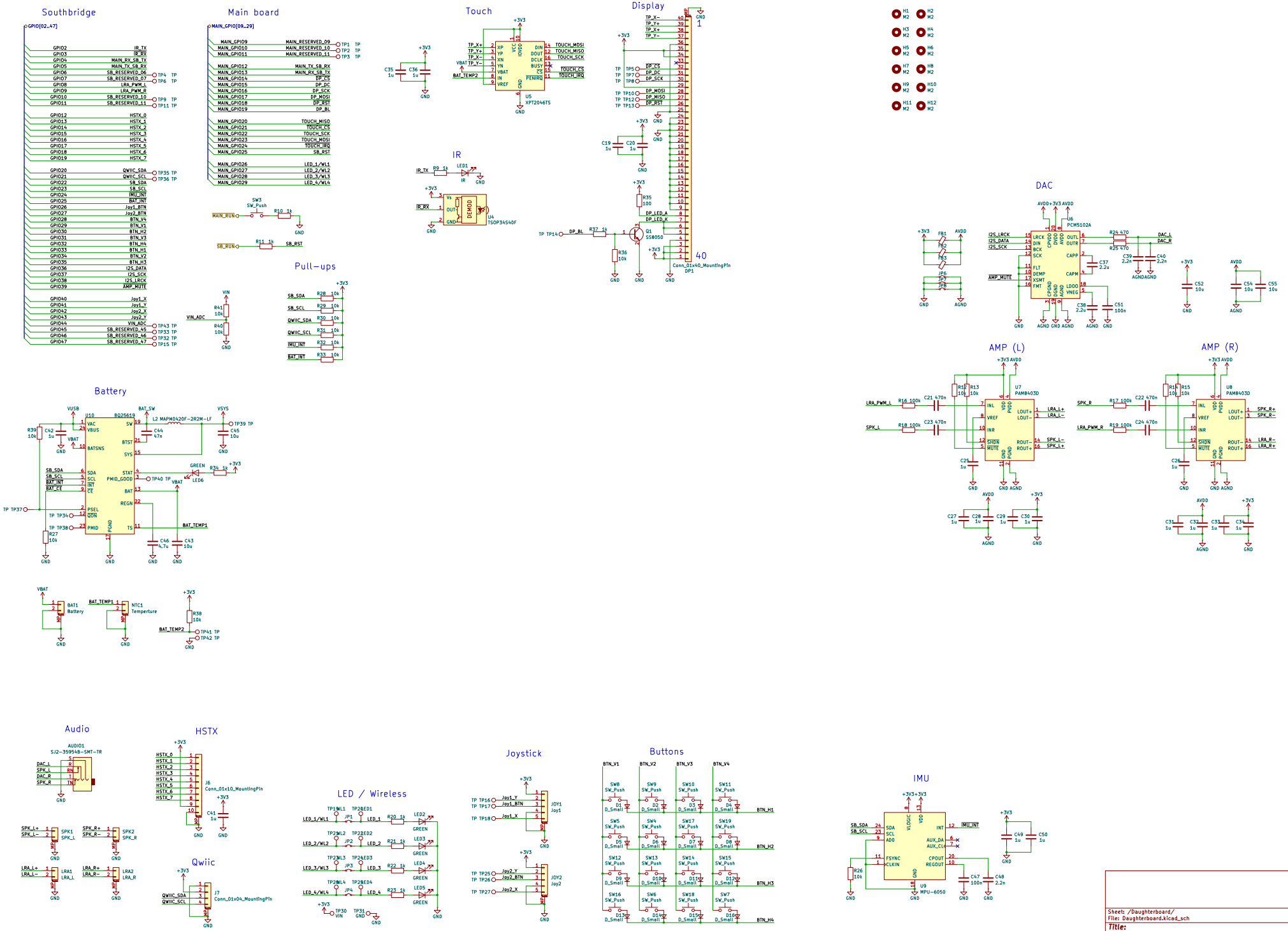
Southbridge
Main board
Touch
Display
IR
Pull-ups
DAC
AMP (L)
AMP (R)
Battery
Audio
HSTX
LED / Wireless
Joystick
Buttons
IMU
Qwiic
Sheet: /Daughterboard/
File: Daughterboard.kicad_sch
Title:
Size: A2
Date:
Rev:
KiCad E.D.A. 9.0.4
Id: 4/4