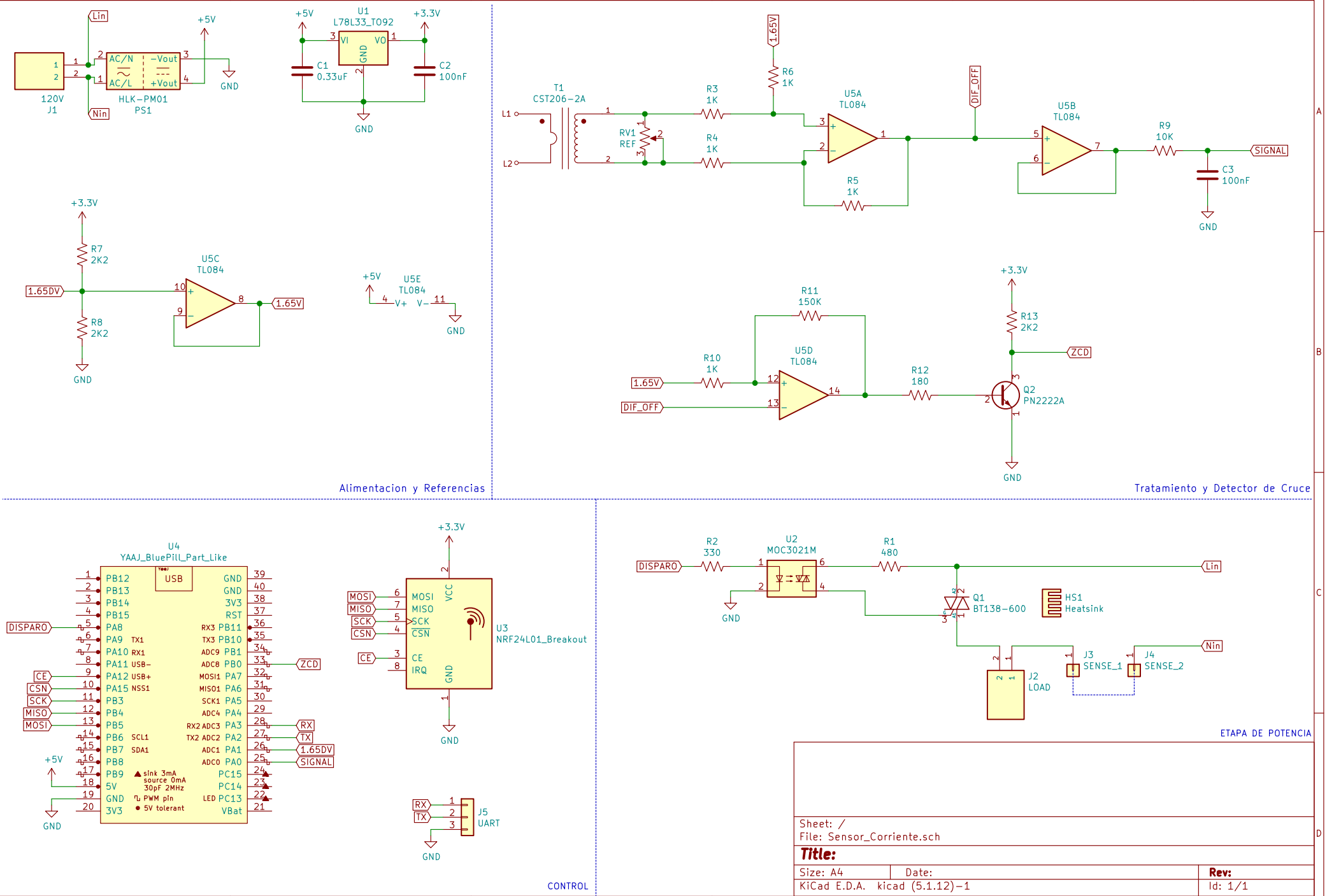
Lin
Nin
120V
J1
AC/N
AC/L
-Vout
+Vout
HLK-PM01
PS1
+5V
GND
U1
L78L33_TO92
VI
VO
GND
+3.3V
C1
0.33uF
C2
100nF
R7
2K2
R8
2K2
1.65DV
U5C
TL084
1.65V
U5E
TL084
V+
V-
Alimentacion y Referencias
T1
CST206-2A
L1
L2
RV1
REF
R3
1K
R4
1K
R5
1K
R6
1K
U5A
TL084
DIF_OFF
U5B
TL084
R9
10K
SIGNAL
C3
100nF
R10
1K
R11
150K
U5D
TL084
R12
180
R13
2K2
ZCD
Q2
PN2222A
Tratamiento y Detector de Cruce
U4
YAAJ_BluePill_Part_Like
USB
PB12
PB13
PB14
PB15
PA8
PA9 TX1
PA10 RX1
PA11 USB-
PA12 USB+
PA15 NSS1
PB3
PB4
PB5
PB6 SCL1
PB7 SDA1
PB8
PB9
5V
GND
3V3
GND
GND
3V3
RST
RX3 PB11
TX3 PB10
ADC9 PB1
ADC8 PB0
MOSI1 PA7
MISO1 PA6
SCK1 PA5
ADC4 PA4
RX2 ADC3 PA3
TX2 ADC2 PA2
ADC1 PA1
ADC0 PA0
PC15
PC14
LED PC13
VBat
sink 3mA
source 0mA
30pF 2MHz
PWM pin
5V tolerant
DISPARO
CE
CSN
SCK
MISO
MOSI
RX
TX
1.65DV
SIGNAL
U3
NRF24L01_Breakout
VCC
CE
IRQ
J5
UART
CONTROL
R2
330
U2
MOC3021M
R1
480
Q1
BT138-600
HS1
Heatsink
J2
LOAD
J3
SENSE_1
J4
SENSE_2
ETAPA DE POTENCIA
Sheet: /
File: Sensor_Corriente.sch
Title:
Size: A4
Date:
Rev:
KiCad E.D.A. kicad (5.1.12)-1
Id: 1/1