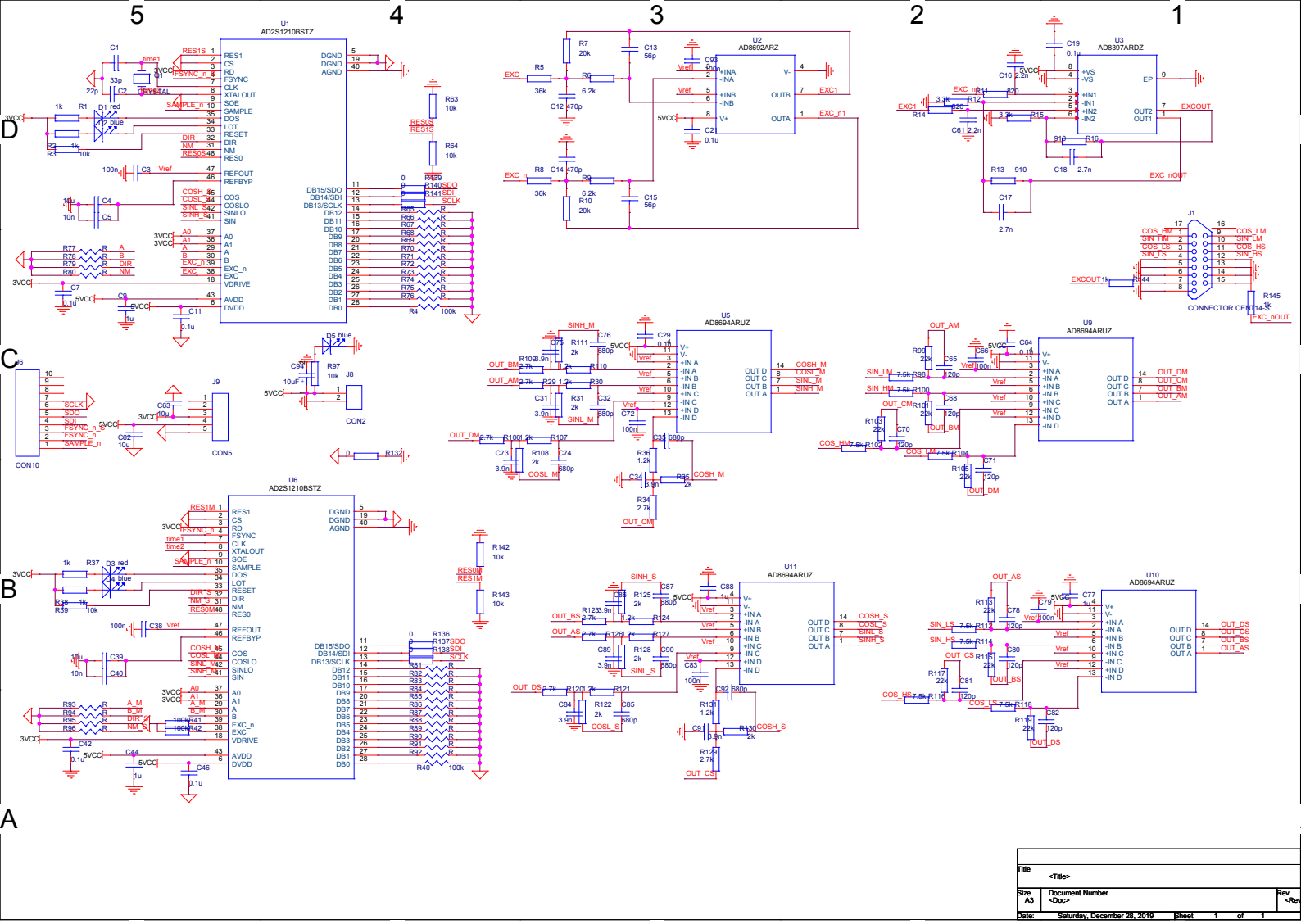

Title	<Title>	
Size A3	Document Number <Doc>	Rev <Rev>
Date: Saturday, December 28, 2019	Sheet 1 of 1	