# COMP2611 COMPUTER ORGANIZATION
# MEMORY HIERARCHY

# Major Goals

- How to build a **Large and Fast** memory system?

- Introduce the **memory hierarchy** and take advantage of the **principle of locality**
- Explain basic **cache** concepts
- Explain basic **virtual memory** concepts

香港科技大學
THE HONG KONG UNIVERSITY OF SCIENCE AND TECHNOLOGY

# Memory Hierarchy Overview

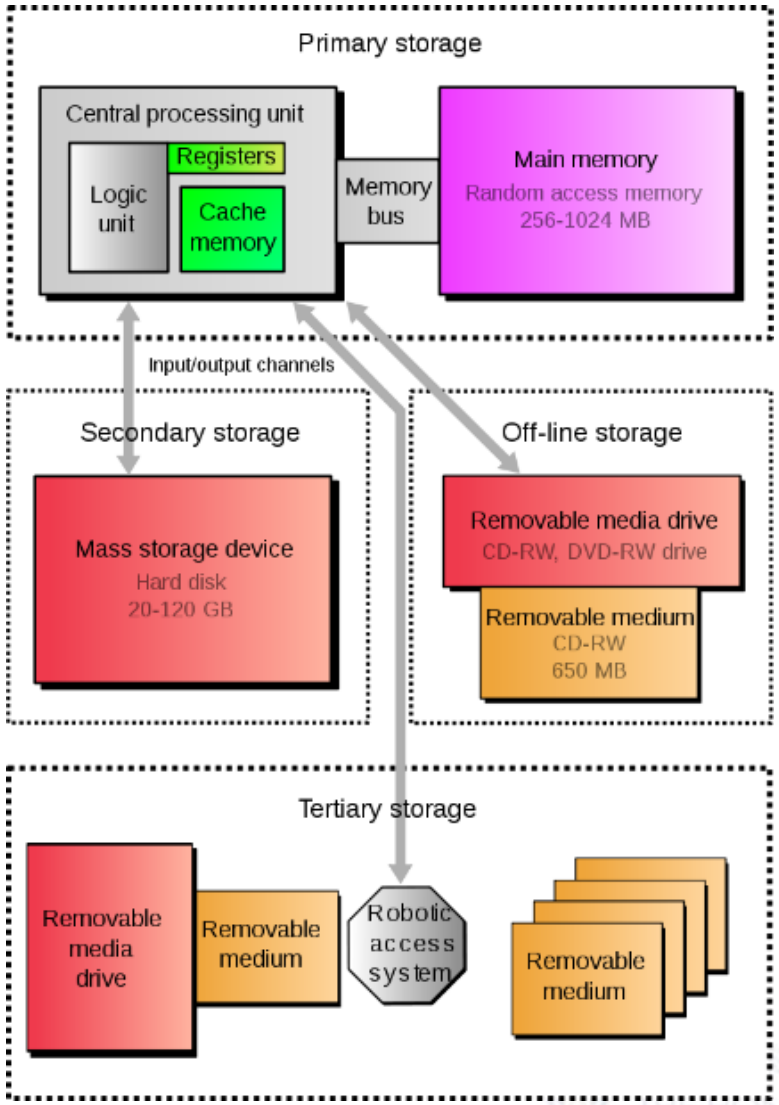

# MEMORY TECHNOLOGY

# Memory Technology Revisit

- **Memory is the storage for instructions and data**

- **RAM (Random Access Memory) technology includes two types**
  - Static RAM (Static RAM) -- mostly used for **cache**
    - 0.5ns – 2.5ns, $2000 – $5000 per GB
  - Dynamic RAM (DRAM) – mostly used for **main memory**
    - 50ns – 70ns, $20 – $75 per GB
- **Hard Disk Drive (HDD) or Solid State Drive (SSD)**
  - Mostly used for **secondary storage**
  - 5ms – 20ms, $0.20 – $2 per GB

- **Ideal memory**
  - Fast: access time of SRAM
  - Large: capacity and cost/GB of disk

香港科技大學
THE HONG KONG UNIVERSITY OF SCIENCE AND TECHNOLOGY

# Example: 4x4 DRAM Array

Transistor:

To enable read/write to the capacitor

Capacitor:

To store the "value"

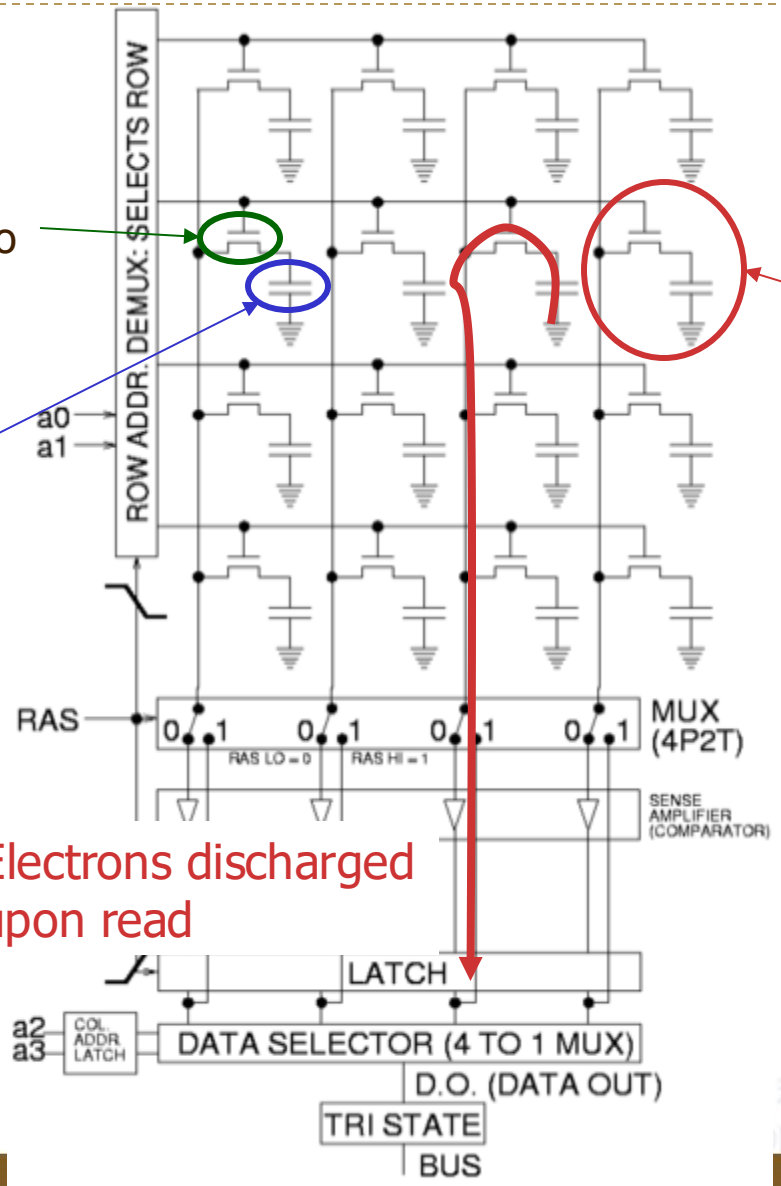


Electrons discharged upon read

A memory cell.

The first DRAM cell was invented in 1966 by Robert Dennard, a researcher at IBM's Thomas J. Watson Research Center



科 技 大 學
ING KONG UNIVERSITY OF SCIENCE AND TECHNOLOGY

# DRAM Technology

- **DRAM**
  - Consists of bits of data stored in a separate capacitors
  - Hold a logical “1” by having capacitor charged, and vice versa

- **Capacitors are**
  - Structurally simple, only one transistor and a one capacitor per bit
  - High density with low cost

- **Major problem of using capacitors:**
  - Real-world capacitors are not ideal, hence leak electrons
  - Information stored in capacitors eventually fades
  - Need to recharge the capacitors periodically to restore the “values”
  - Read operation discharges the electrons: read is destructive

- **Because of this refresh requirement, it is called dynamic memory**

香港科技大學
THE HONG KONG UNIVERSITY OF SCIENCE AND TECHNOLOGY

# SRAM Technology

- **SRAM is a type of semiconductor memory**
  - Each cell is constructed using transistors only (i.e. not capacitors)
  - Density not as high as DRAM, it is more expensive
  - Does not need to be periodically refreshed, the memory retains its contents as long as power remains applied
  - Read is not destructive in SRAM design; that's why called static

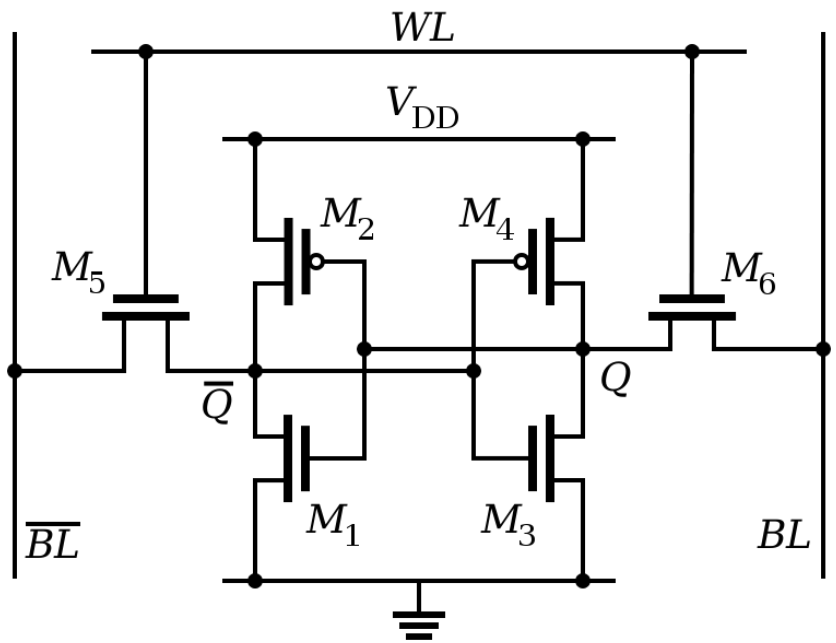


A six-transistor CMOS SRAM cell

香港科技大學
THE HONG KONG UNIVERSITY OF SCIENCE AND TECHNOLOGY

# DRAM vs. SRAM

| Comparison | SRAM | DRAM |
|---|---|---|
| Speed | Faster | Slower |
| Size | Small | Large |
| Cost | Expensive | Cheap |
| Used in | Cache memory | Main memory |
| Density | Less dense | Highly dense |
| Single block of memory | 6 transistors | 1 transistor |
| Charge leakage property | Not present | require power refresh |
| Power | Low | High |

- **Before: discussions always assumed that memory access takes one cycle**
  **From now on, this assumption is dropped**
- **Implication: performance of processor looks bad with this reality**
- **In this chapter, we'll look into ways to minimize the impact of this**

香港科技大學
THE HONG KONG UNIVERSITY OF SCIENCE AND TECHNOLOGY

# Hard Disk Drive (HDD)

- Non-volatile, rotating magnetic storage

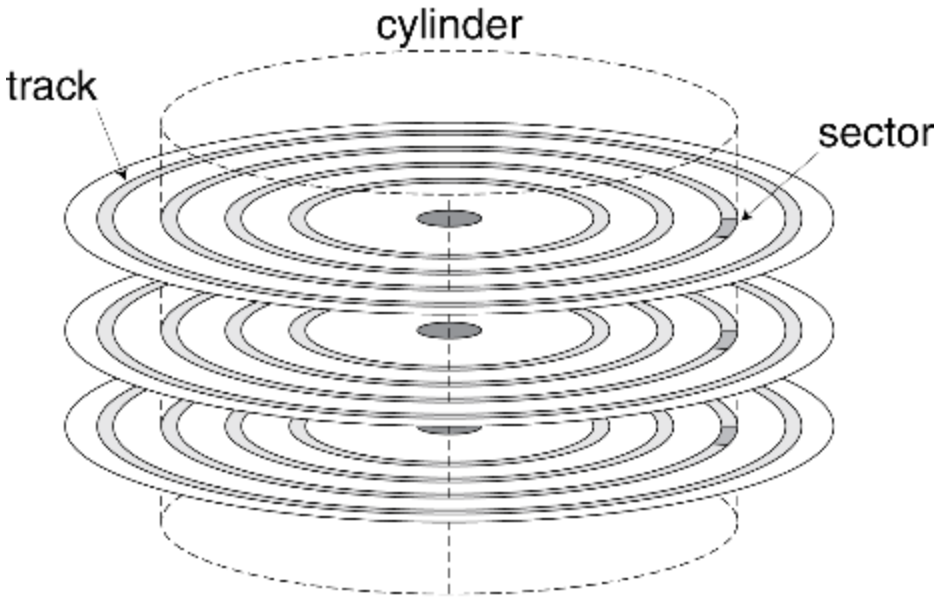


香港科技大學
THE HONG KONG UNIVERSITY OF SCIENCE AND TECHNOLOGY

# Disk Sectors and Accesses

- **Each sector records**
  - Sector ID
  - Data (512 bytes, 4096 bytes proposed)
  - Error correcting code (ECC)
    - Used to hide defects and recording errors
  - Synchronization fields and gaps
- **Access to a sector involves**
  - Queuing delay if other accesses are pending
  - Seek: move the heads
  - Rotational latency
  - Data transfer
  - Controller overhead

香港科技大學
THE HONG KONG UNIVERSITY OF SCIENCE AND TECHNOLOGY

# Disk Access Example

- **Given**
  - 512B sector, 15,000rpm, 4ms average seek time, 100MB/s transfer rate, 0.2ms controller overhead, idle disk
- **Average read time**
  - 4ms seek time
    + ½ / (15,000/60) = 2ms rotational latency
    + 512 / 100MB/s = 0.005ms transfer time
    + 0.2ms controller delay
    = 6.205ms
- **If actual average seek time is 1ms**
  - Average read time = 3.205ms

香港科技大學
THE HONG KONG UNIVERSITY OF SCIENCE AND TECHNOLOGY

# Solid-State Drive (SSD)

- **Non-volatile semiconductor storage**
  - 100x – 1000x faster than disk
  - Varying densities and capacities achieved in SSDs by stacking chips in a grid
  - Smaller, lower power, more robust
  - But more $/GB (between disk and DRAM)

香港科技大學
THE HONG KONG UNIVERSITY OF SCIENCE AND TECHNOLOGY

# Processor-Memory Bottleneck

- **DRAM improvement is not keeping up with processor improvement**
  - Processors are getting much faster than memories over time
  - The speed gap is widening!
- **Memory bottleneck**

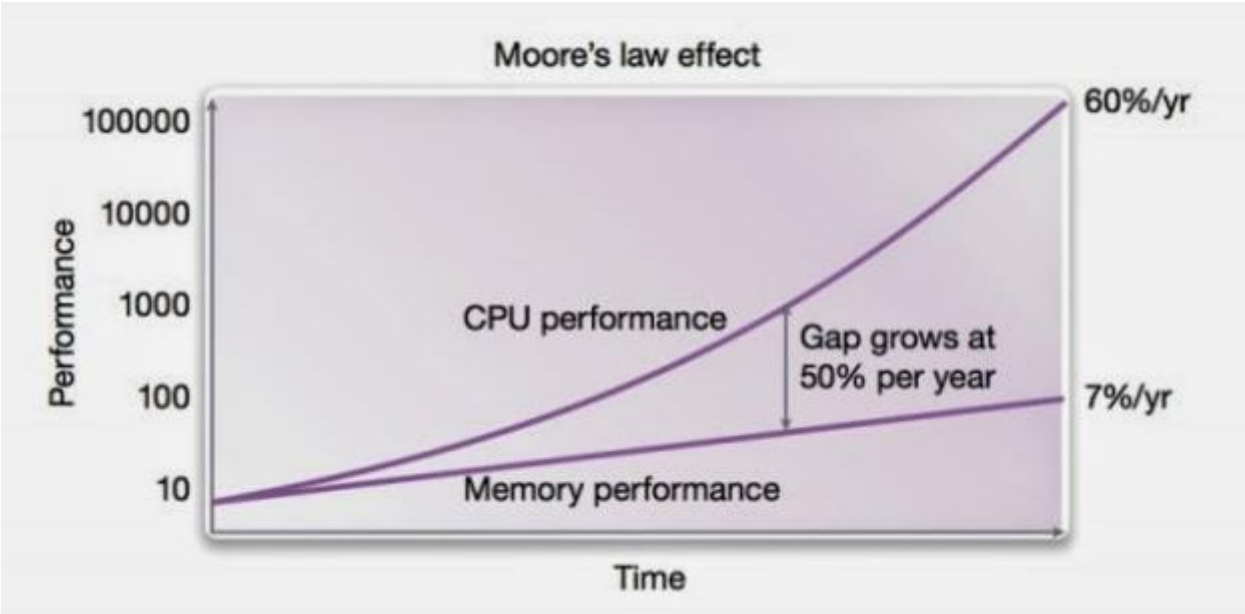


- **Solution: Use a memory hierarchy exploiting the principle of locality**

香港科技大學
THE HONG KONG UNIVERSITY OF SCIENCE AND TECHNOLOGY

# PRINCIPLE OF LOCALITY

# Principle of Locality

Programs access a small proportion of their address space at any time

- **Such execution pattern exhibits two types of localities**
- **Temporal locality**
  - Items accessed recently are likely to be accessed again soon
  - e.g., instructions in a loop, induction variables
- **Spatial locality**
  - Items near those accessed recently are likely to be accessed soon
  - E.g., sequential instruction access, array data

- **This property is the KEY to memory hierarchy!**

香港科技大學
THE HONG KONG UNIVERSITY OF SCIENCE AND TECHNOLOGY

# Example: Identifying Temporal and Spatial Locality

- Summing up 100 values stored in memory

```
        addi    $s0, $zero, 0       # $s0: accumulator
        addi    $s1, $zero, 100     # $s1: counter
L1:     lw      $t1, 0($s2)         # $s2: memory addr
        add     $s0, $s0, $t1
        addi    $s2, $s2, 4
        subi    $s1, $s1, 1
        bne     $s1, $zero, L1
```

- Temporal and spatial locality can be observed in both instructions & data

香港科技大學
THE HONG KONG UNIVERSITY OF SCIENCE AND TECHNOLOGY

# Example: Locality During Program Execution

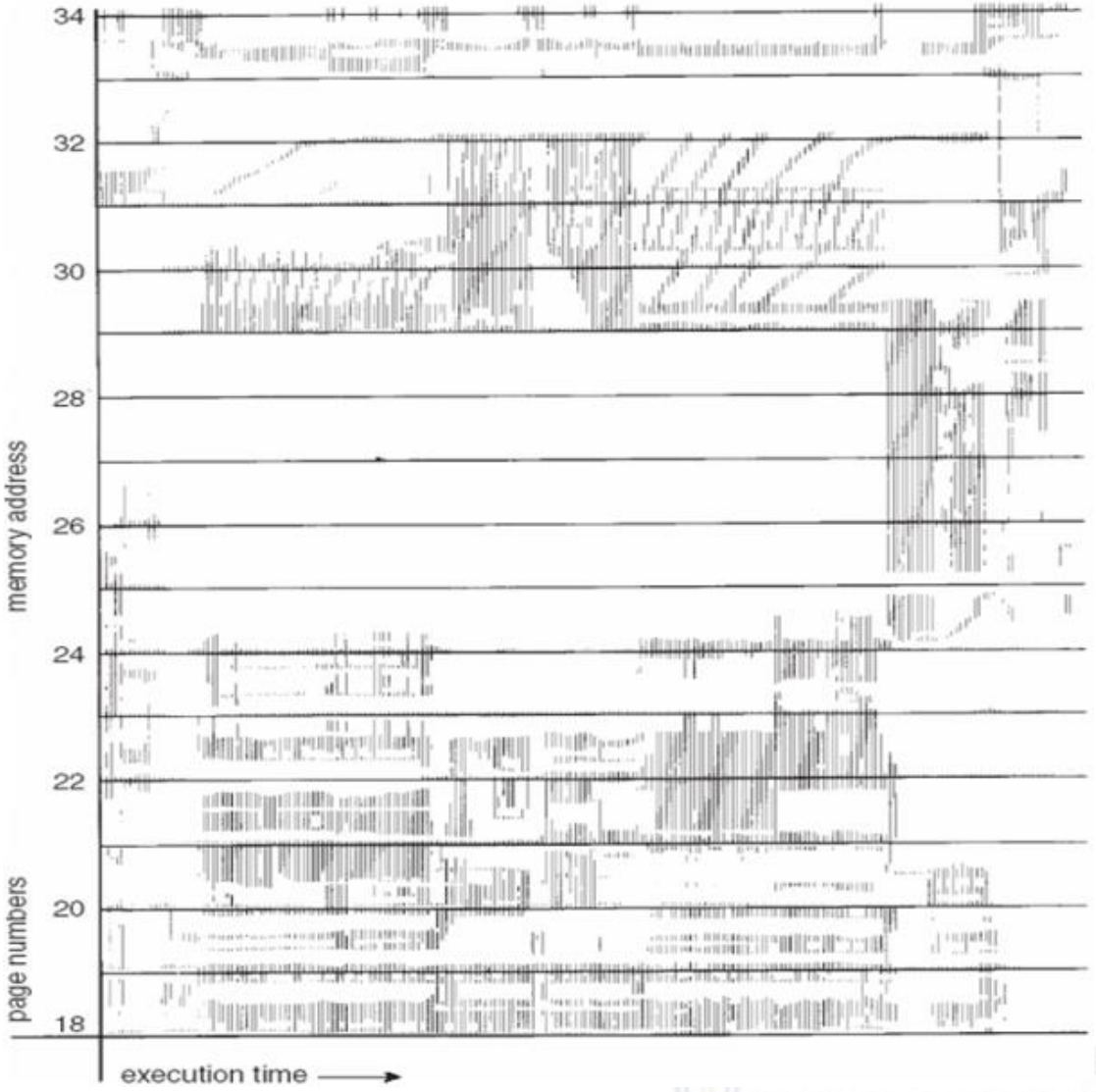




THE HONG KONG UNIVERSITY OF SCIENCE AND TECHNOLOGY

# Memory Hierarchy

- A **memory hierarchy** consists of multiple levels of memory
- Users have the illusion of a memory
  - as large as the largest level
  - as fast as the fastest level
- A trade-off between performance and cost

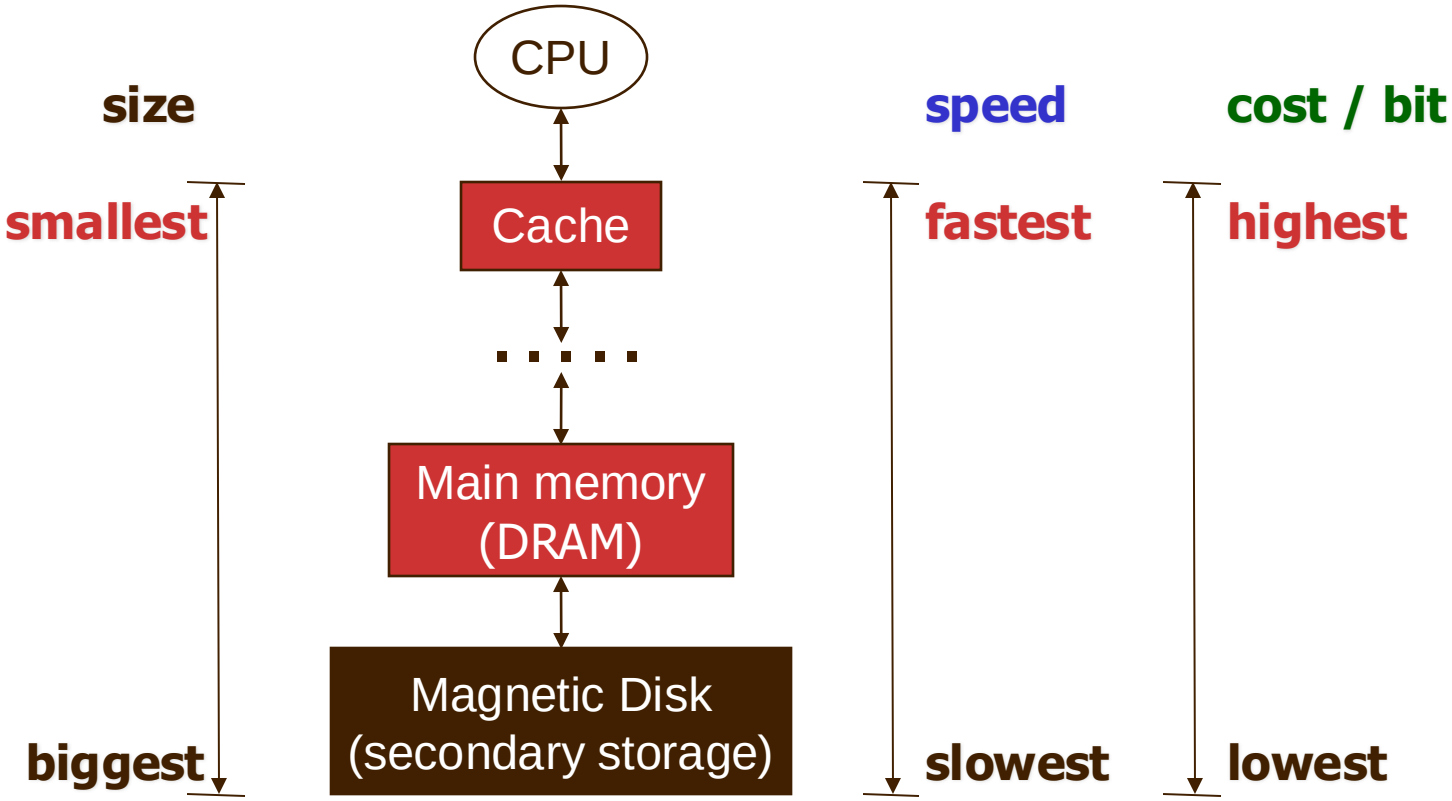

# Real Stuff

- Intel Nehalem 4-core processor
- Per core: 32KB L1 I-cache, 32KB L1 D-cache, 512KB L2 cache

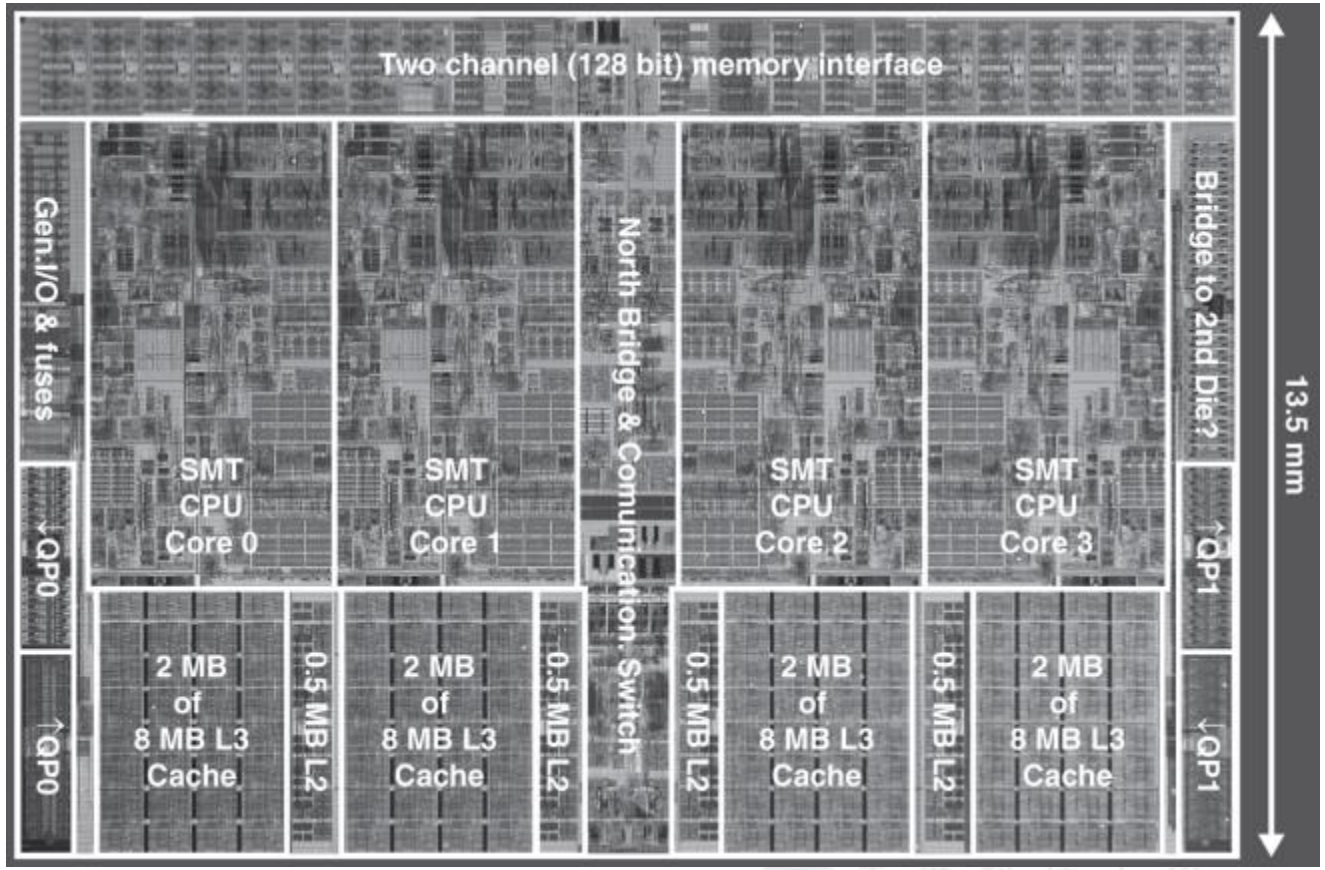


香港科技大學
THE HONG KONG UNIVERSITY OF SCIENCE AND TECHNOLOGY

# How does memory hierarchy operate?

- **Store everything on hard disk**
- **When program starts to execute**
- **Initially,**
  - Instructions and data are loaded into memory (DRAM) from disk
- **Upon first access,**
  - A copy of the referenced instruction or data item is kept in cache
- **In subsequent accesses,**
  - First, look for the requested item in the cache
  - If the item is in the cache, return the item to the CPU
  - If NOT in the cache, look it up in the memory

- **If not found in this level, look it up at next level until found**
- **Keep (or cache) a copy of the found item at this level after use**

香港科技大學
THE HONG KONG UNIVERSITY OF SCIENCE AND TECHNOLOGY

# Hit or Miss?

- Data are copied in **blocks** (aka **line, unit of copying, maybe multiple words**) between only two adjacent levels at a time

- If accessed data is present in upper level
- **Hit**: access satisfied by upper level
- Time to send data out: **hit time**

- If accessed data is absent
- **Miss**: block copied from lower level
- Data transfer occurs from the lower level to the upper level
- Time needed: **miss penalty**

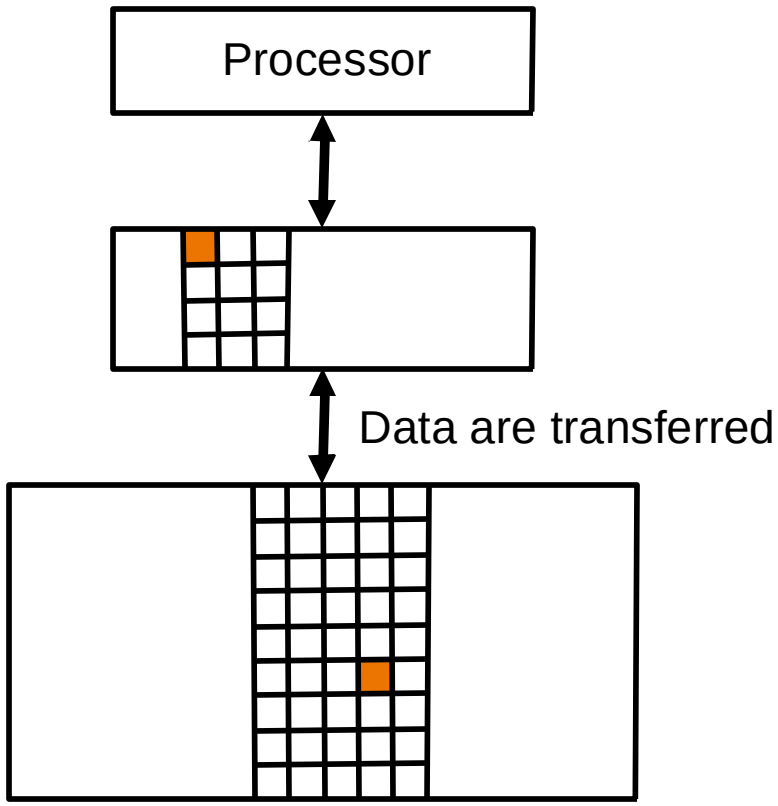


香港科技大學
THE HONG KONG UNIVERSITY OF SCIENCE AND TECHNOLOGY

# Performance Measures

- **Hit rate (or hit ratio):**
  - Fraction of memory accesses found in the upper level
- **Miss rate: 1 - hit rate**

- **Cache hit time:**

  **= time to determine miss or hit + time to access the cache**
- **Cache miss penalty:**

  **= time to bring a block from lower level to upper level**

- **Hit time << Miss penalty**

香港科技大學
THE HONG KONG UNIVERSITY OF SCIENCE AND TECHNOLOGY

# Cache Performance

Average memory access latency = hit time + miss rate * miss penalty

For a configuration with a single level of cache, average memory latency

= hit time + miss ratio * miss penalty

= hit time + (1 - hit ratio) * miss penalty

For two levels of caches, average memory latency

= hit $time_1$ + miss $ratio_1$ * miss $penalty_1$

= hit $time_1$ + miss $ratio_1$ * (hit $time_2$ + miss $ratio_2$ * miss $penalty_2$)

= hit $time_1$ +
miss $ratio_1$ * hit $time_2$ +
miss $ratio_1$ * miss $ratio_2$ * miss $penalty_2$

The same idea can be extended to multiple levels of caches

香港科技大學
THE HONG KONG UNIVERSITY OF SCIENCE AND TECHNOLOGY

# Example: Performance with One Level of Cache

Example (assume everything else is ideal)

- 3-cycle cache access latency
- 100-cycle memory access latency
- Assuming 0-cycle for bus and cache lookup
- Data: 70% of the times in cache

Average memory latency

= 0.7 * 3 + 0.3 * (3 + 100)

= 3 + 0.3 * 100

= 33 cycles

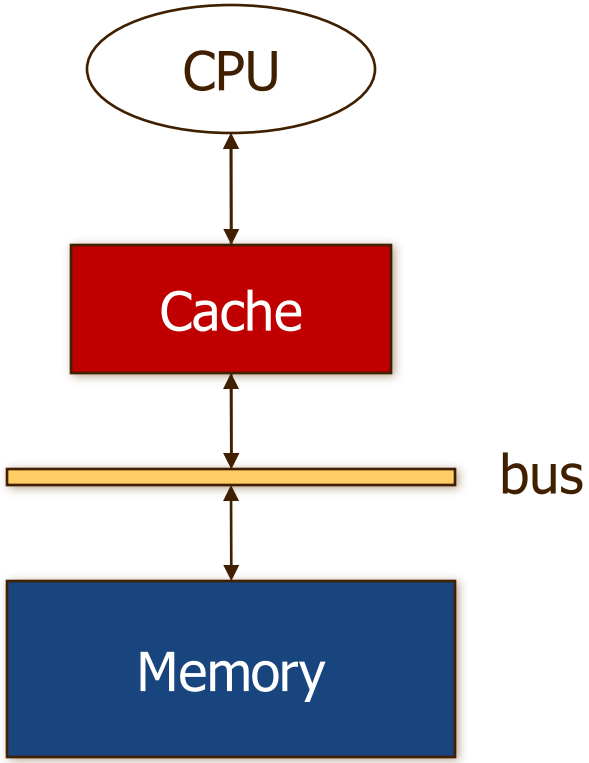


Without cache, it is 100 cycles !!!

With caching, performance is better

We are closer to the ideal case!

香港科技大學
THE HONG KONG UNIVERSITY OF SCIENCE AND TECHNOLOGY

# Example: Performance with Two Levels of Caches

Example

- 3-cycle L1 latency
- 12-cycle L2 latency
- 100-cycle memory latency
- Assuming 0-cycle for bus and cache lookup
- Data: hit 70% in L1
- Data: hit 60% in L2

Average memory latency

= 0.7 x 3 + 0.3 x 0.6 (12+3) + 0.3 x 0.4 (100+ 12+ 3)

Or alternative calculation

= 3 + 0.3 * 12 + 0.3 * 0.4 * 100

= 3 + 3.6 + 12.0

= 18.6 cycles (better than one level)

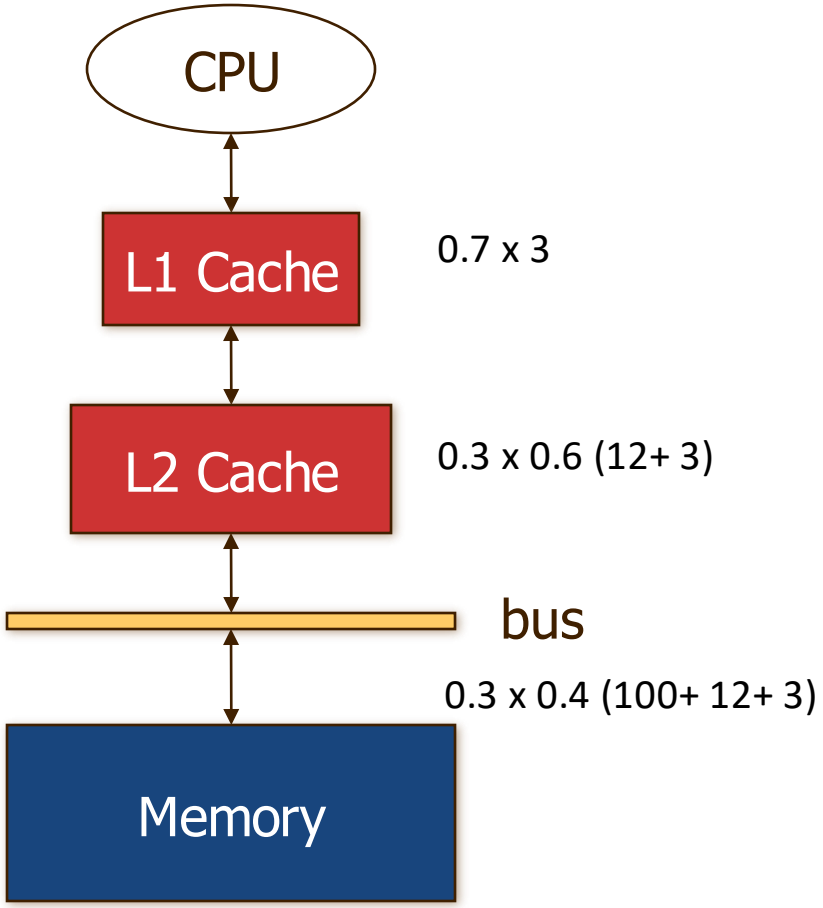


香港科技大學
THE HONG KONG UNIVERSITY OF SCIENCE AND TECHNOLOGY

# CACHE

# Cache Operations

## Block placement

- Where is a block placed in the cache?

## Block identification

- How can a block be found if it is in the cache?

## Block replacement

- Upon miss, how the victim block in the cache is selected for replacement?

## Write strategy

- When a write occurs, is the information written only to the cache?

香港科技大學
THE HONG KONG UNIVERSITY OF SCIENCE AND TECHNOLOGY

# Cache Organization

Cache is organized as an array of cache blocks

Each memory location is mapped to ONE location in the cache

Cache block

- A minimum unit of information that can be present in cache or not

Cache block sizes

- Commonly used today: 32 bytes and 64 bytes

Three basic organizations

- Direct-mapped (one memory block to one possible cache block)
- Set-associative (one memory block to one set of possible cache blocks)
- Fully-associative (one memory block to all possible cache blocks)

香港科技大學
THE HONG KONG UNIVERSITY OF SCIENCE AND TECHNOLOGY

# Direct Mapped Cache

- **When transfer a block from main memory to cache**
  - Its location in cache is determined by memory address
- **Direct mapped: only one candidate location in cache**
  - (Block address) modulo (#Blocks in cache)
- **Many-to-one mapping**

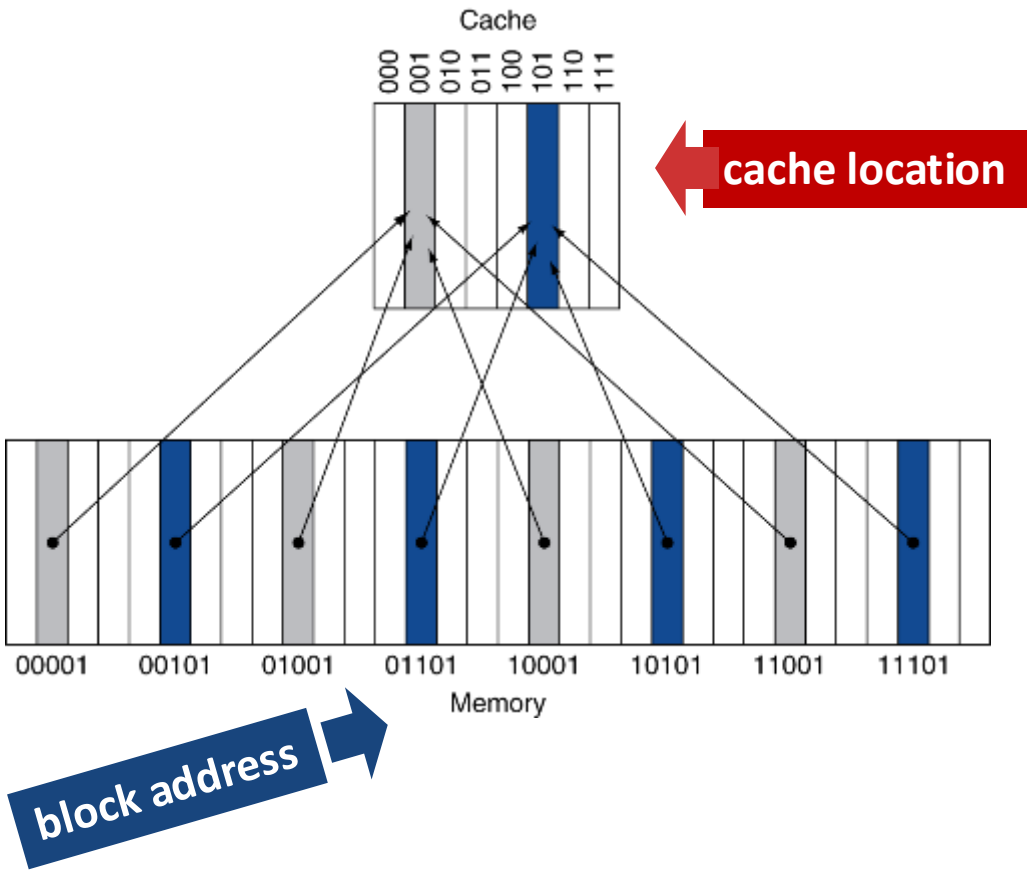

# Block Placement Example

- Block size = 8 words (i.e. 32 bytes)
- Direct mapped cache has 8 blocks

Example: `lw $t0, 1200($zero)`

- Processor asks for a word from **byte address 1200**
- That word resides in **block 37** in memory, e.g. floor(1200/32) = 37
- The whole block will be loaded to **cache set 5**, e.g. 37 mod 8 = 5
- Then that word will be sent to processor

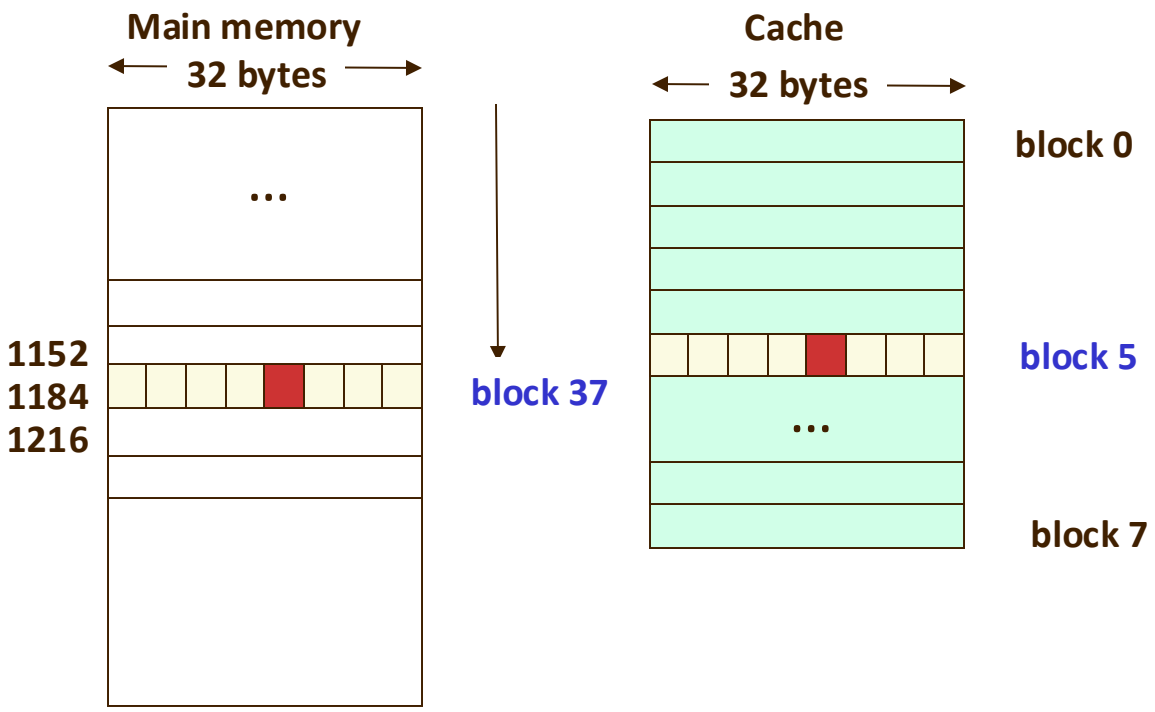


香港科技大學
THE HONG KONG UNIVERSITY OF SCIENCE AND TECHNOLOGY

# Block Placement Shortcut

Tag Index

- Byte address 1200: 0000 0000 0000 0000 0000 0100 1011 0000

Block address Byte offset

- It belongs to memory block 37: 0000 0000 0000 0000 0000 0100 101 (block address)
- Block 37 will be loaded to cache block 5: 101

- Shortcut:
- If the number of cache sets (N) is a power of 2; $N = 2^m$
- Cache_location = the low-order m bits of block address

- Which cache set?
- 0000 0000 0000 0000 0000 0100 1011 0011
- 0011 0001 0010 0000 0000 0100 1011 0000

香港科技大學
THE HONG KONG UNIVERSITY OF SCIENCE AND TECHNOLOGY

# Block Identification: Tags and Valid Bits

- **How do we know which particular block is stored in a cache location?**
  - Store block address as well as the data
  - Actually, only need the high-order bits
  - Called the tag
- **What if there is no data in a location?**
  - Valid bit: 1 = present, 0 = not present
  - Initially 0

香港科技大學
THE HONG KONG UNIVERSITY OF SCIENCE AND TECHNOLOGY

# Address Sub-divison

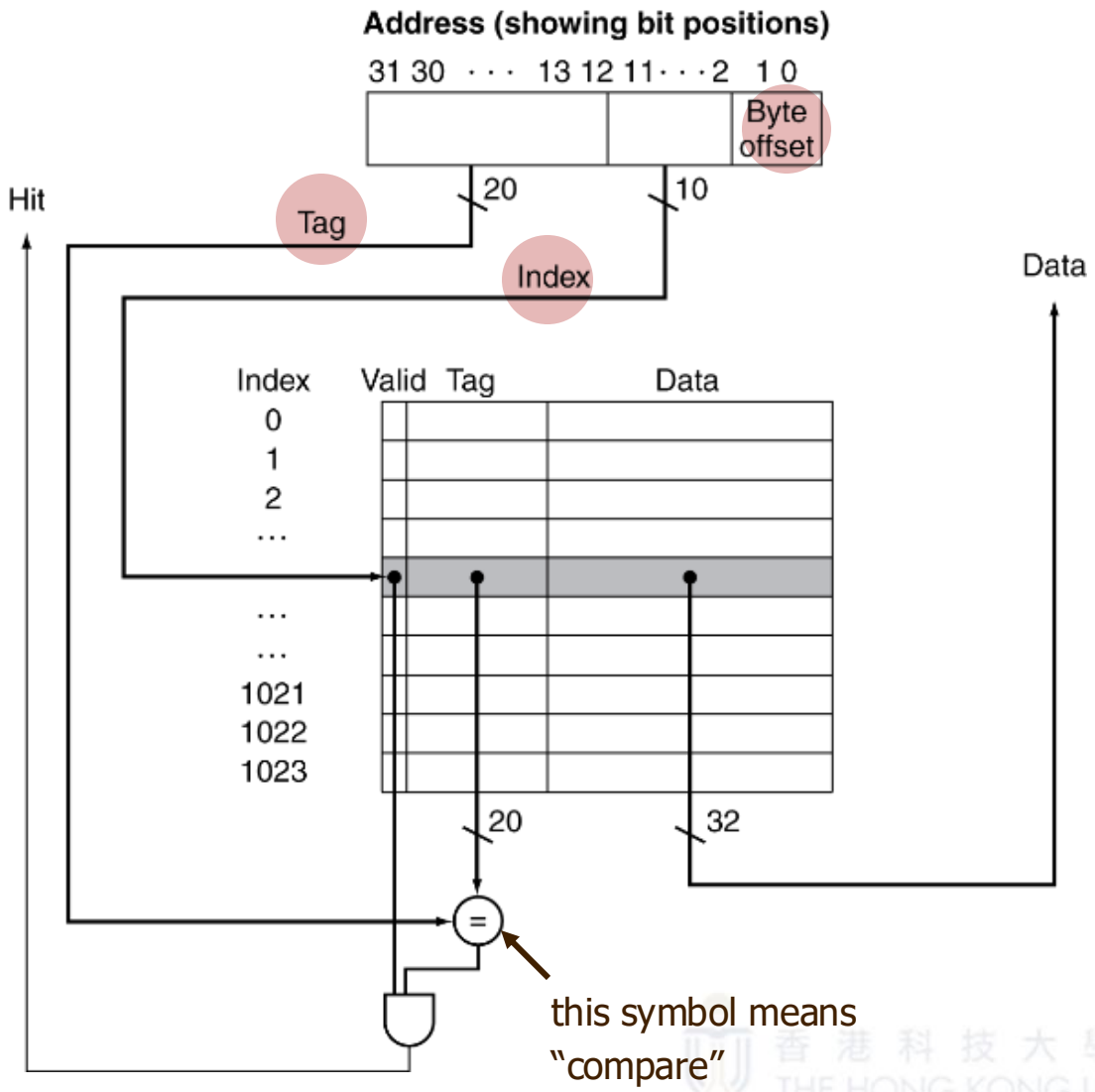


this symbol means "compare"

# Block Identification Example

- block size = 8 words (i.e. 32 bytes)
- Direct-mapped cache with 8 blocks

| Memory (byte) address generated by processor | Block address | Hit or miss in cache | Assigned cache block (where found or placed) |
|---|---|---|---|
| 0010 1100 $0010_2$ | 0010 $110_2$ | **Miss** | ($0010110_2$ mod 8) = $110_2$ |
| 0011 0100 $0000_2$ | 0011 $010_2$ | **Miss** | ($0011010_2$ mod 8) = $010_2$ |
| 0010 1100 $0100_2$ | 0010 $110_2$ | **Hit** | ($0010110_2$ mod 8) = $110_2$ |
| 0010 1100 $0010_2$ | 0010 $110_2$ | **Hit** | ($0010110_2$ mod 8) = $110_2$ |
| 0010 0000 $1000_2$ | 0010 $000_2$ | **Miss** | ($0010000_2$ mod 8) = $000_2$ |
| 0000 0110 $0000_2$ | 0000 $011_2$ | **Miss** | ($0000011_2$ mod 8) = $011_2$ |
| 0010 0001 $0000_2$ | 0010 $000_2$ | **Hit** | ($0010000_2$ mod 8) = $000_2$ |
| 0010 0100 $0001_2$ | 0010 $010_2$ | **Miss** | ($0010010_2$ mod 8) = $010_2$ |

| Cache BLK# \| Tag | |
|---|---|
| 000 | 0010 |
| 001 | |
| 010 | 0010 |
| 011 | 0000 |
| 100 | |
| 101 | |
| 110 | 0010 |
| 111 | |

- Miss rate = (# of misses) / (# total memory accesses) = 5 / 8

香港科技大學
THE HONG KONG UNIVERSITY OF SCIENCE AND TECHNOLOGY

# Bits in Cache

- A direct-mapped cache with 16KB of data and 8-word ($2^5$ bytes) blocks
- Assume 32-bit memory address
- What is the actual cache size?

**16KB** = **4K** words = $\mathbf{2^{12}}$ words

Block size of **8** words -> $\mathbf{2^9}$ blocks

Each block has **8 x 32 = 256** bits of data

A tag has **32 - 9 - 5 = 18** bits

And, **1** valid bit

Total bits per entry = **(256 + 18 + 1)**

**Total cache size**

$\mathbf{2^9 \times (256 + 18 + 1) = 2^9 \times 275 = 140800 = 137.5}$ **Kbits**

香港科技大學
THE HONG KONG UNIVERSITY OF SCIENCE AND TECHNOLOGY

# Block Size vs. Miss Rate

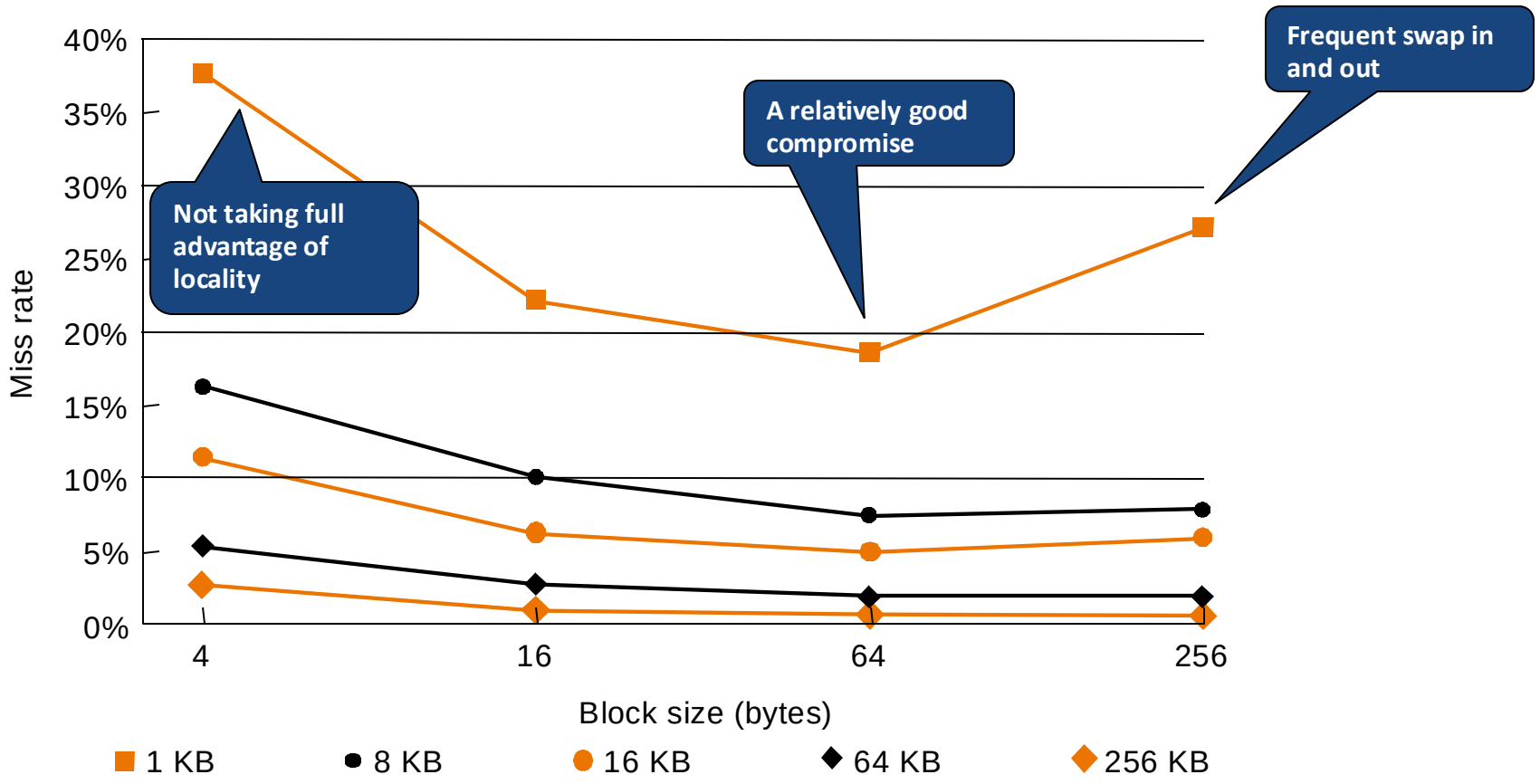

# Cache Misses

- **On cache hit, CPU proceeds normally**
- **On cache miss**
  - Stall the CPU pipeline
  - Fetch block from next level of hierarchy
  - Instruction cache miss
    - Restart instruction fetch
  - Data cache miss
    - Complete data access

香港科技大學
THE HONG KONG UNIVERSITY OF SCIENCE AND TECHNOLOGY

# Disadvantage of Direct Mapped Cache

- **Blocks mapped to same cache block can't be present simultaneously**

- **Example: Given a cache with 8 blocks**
  - Processor sends out the following memory block address to access: 100011, 001011, 100011
  - Block 100011 & 001011 are mapped to the same cache set 011
  - Arrival of block 001011 will kick (i.e. replace) 100011 out
    - i.e. both blocks can't be present simultaneously
  - Subsequent access to 100011 will not hit but miss

- **Less performance improvement with such cache conflict**
- **Can we alleviate this conflict problem to increase the cache hit rate?**

香港科技大學
THE HONG KONG UNIVERSITY OF SCIENCE AND TECHNOLOGY

# Associate Cache

## Fully associative (FA)

- Each block can be placed **anywhere** in the cache
- **Advantage:**
  - No cache conflict ⇒ better cache hit rate than **direct mapped**
  - But, still see misses due to size (capacity miss)
- **Disadvantage:**
  - Costly (hardware and time) to search for a block in the cache

## N-Way Set associative (SA)

- Each block can be placed in a **certain number (N)** of cache locations (i.e. **set**)
- A good **compromise** between direct mapped & fully associative
  - In terms of cost and hit rate

香港科技大學
THE HONG KONG UNIVERSITY OF SCIENCE AND TECHNOLOGY

# Spectrum of Cache Associativity

- Example: associativity in a cache with 8 blocks

**One-way set associative (direct mapped)**

| Block | Tag | Data |
|---|---|---|
| 0 | | |
| 1 | | |
| 2 | | |
| 3 | | |
| 4 | | |
| 5 | | |
| 6 | | |
| 7 | | |

**Two-way set associative**

| Set | Tag | Data | Tag | Data |
|---|---|---|---|---|
| 0 | | | | |
| 1 | | | | |
| 2 | | | | |
| 3 | | | | |

**Four-way set associative**

| Set | Tag | Data | Tag | Data | Tag | Data | Tag | Data |
|---|---|---|---|---|---|---|---|---|
| 0 | | | | | | | | |
| 1 | | | | | | | | |

**Eight-way set associative (fully associative)**

| Tag | Data | Tag | Data | Tag | Data | Tag | Data | Tag | Data | Tag | Data | Tag | Data | Tag | Data |
|---|---|---|---|---|---|---|---|---|---|---|---|---|---|---|---|
| | | | | | | | | | | | | | | | |

香港科技大學
THE HONG KONG UNIVERSITY OF SCIENCE AND TECHNOLOGY

# How much associativity?

- **Increase in degree of associativity**
  - Advantage: Decrease in miss rate
  - Disadvantage: Increase in hit time (due to longer search time)
  - But with diminishing returns
- **Simulation of a system with 64KB Data cache, 16-word blocks, SPEC2000**
  - 1-way: 10.3%
  - 2-way: 8.6%
  - 4-way: 8.3%
  - 8-way: 8.1%

香港科技大學
THE HONG KONG UNIVERSITY OF SCIENCE AND TECHNOLOGY

# Associativity Example

- **Compare 4-block caches**
  - Direct mapped, 2-way set associative, fully associative
  - Block access sequence: 0, 8, 0, 6, 8
- **Direct mapped**

| Block address | Cache index | Hit/miss | Cache content after access | | | |
|---|---|---|---|---|---|---|
| | | | 0 | 1 | 2 | 3 |
| 0 | 0 | miss | **Mem[0]** | | | |
| 8 | 0 | miss | **Mem[8]** | | | |
| 0 | 0 | miss | **Mem[0]** | | | |
| 6 | 2 | miss | Mem[0] | | **Mem[6]** | |
| 8 | 0 | miss | **Mem[8]** | | Mem[6] | |

香港科技大學
THE HONG KONG UNIVERSITY OF SCIENCE AND TECHNOLOGY

# Associativity Example (cont.)

- **2-way set associative**

| Block address | Cache index | Hit/miss | Cache content after access | | | |
|---|---|---|---|---|---|---|
| | | | Set 0 | | Set 1 | |
| 0 | 0 | miss | **Mem[0]** | | | |
| 8 | 0 | miss | Mem[0] | **Mem[8]** | | |
| 0 | 0 | hit | **Mem[0]** | Mem[8] | | |
| 6 | 0 | miss | **Mem[6]** | Mem[8] | | |
| 8 | 0 | hit | Mem[6] | **Mem[8]** | | |

- **Fully associative**

| Block address | | Hit/miss | Cache content after access | | | |
|---|---|---|---|---|---|---|
| 0 | | miss | **Mem[0]** | | | |
| 8 | | miss | Mem[0] | **Mem[8]** | | |
| 0 | | hit | **Mem[0]** | Mem[8] | | |
| 6 | | miss | Mem[0] | Mem[8] | **Mem[6]** | |
| 8 | | hit | Mem[0] | **Mem[8]** | Mem[6] | |

香港科技大學
THE HONG KONG UNIVERSITY OF SCIENCE AND TECHNOLOGY

# Block Identification in N-way Set Associative Cache

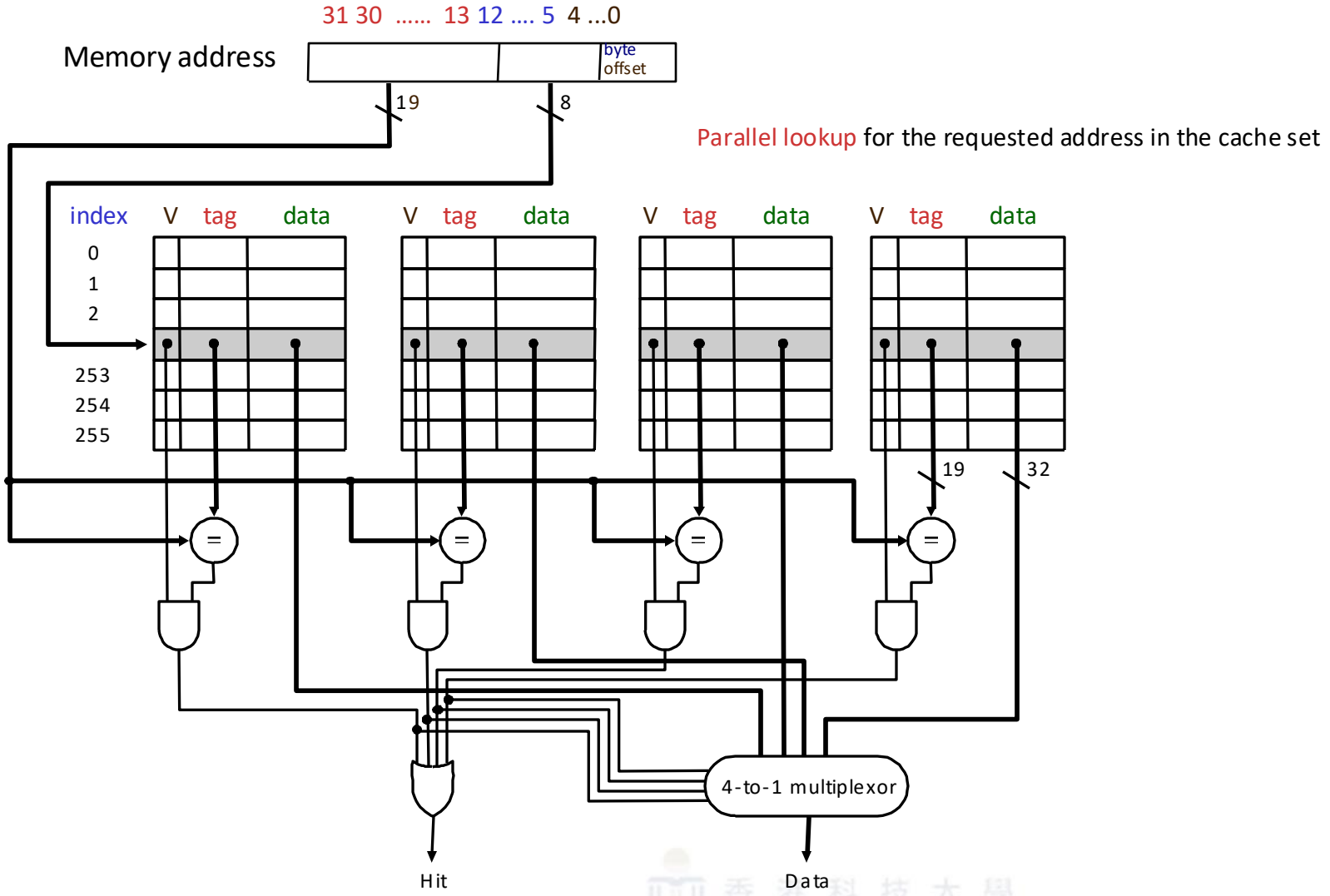

# Handling Cache Accesses

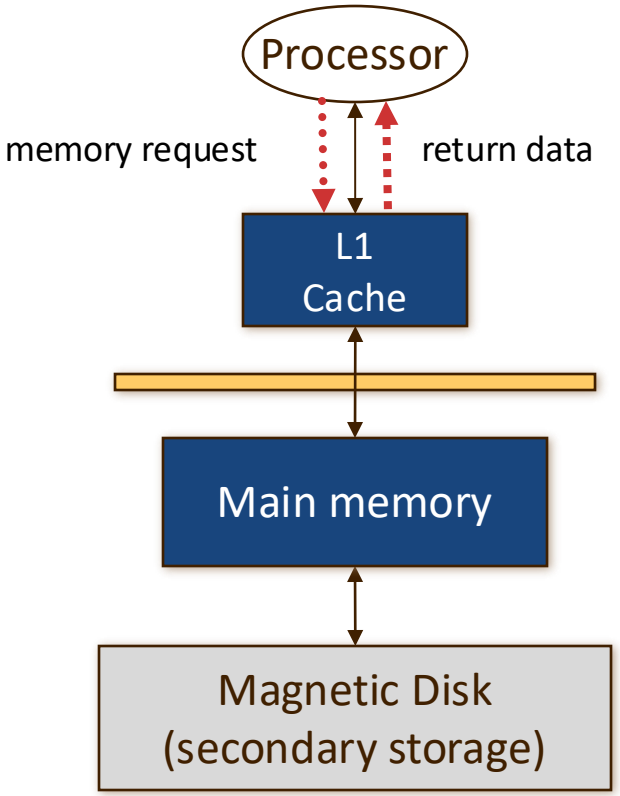


**Cache hit**

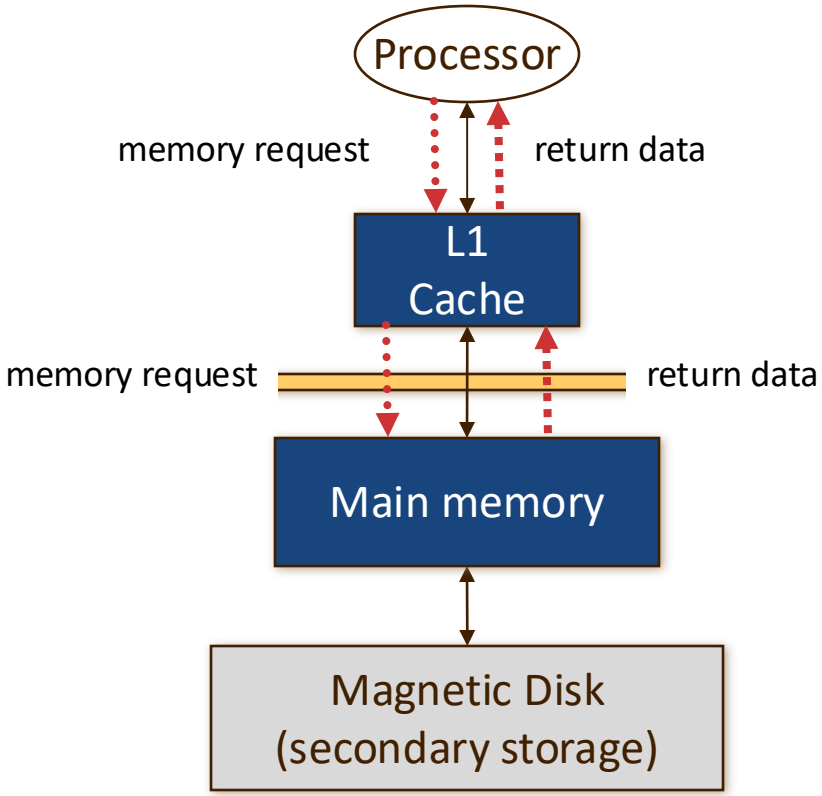


**Cache Miss**

香港科技大學
THE HONG KONG UNIVERSITY OF SCIENCE AND TECHNOLOGY

# Caching the Instruction

## Instructions are also stored in memory

- Upon execution of a program,
  CPU fetches instructions from memory

- To avoid long instruction fetch,
  same caching idea can be applied to instructions

➢ An example of instruction cache in a two-level cache hierarchy is shown in the figure

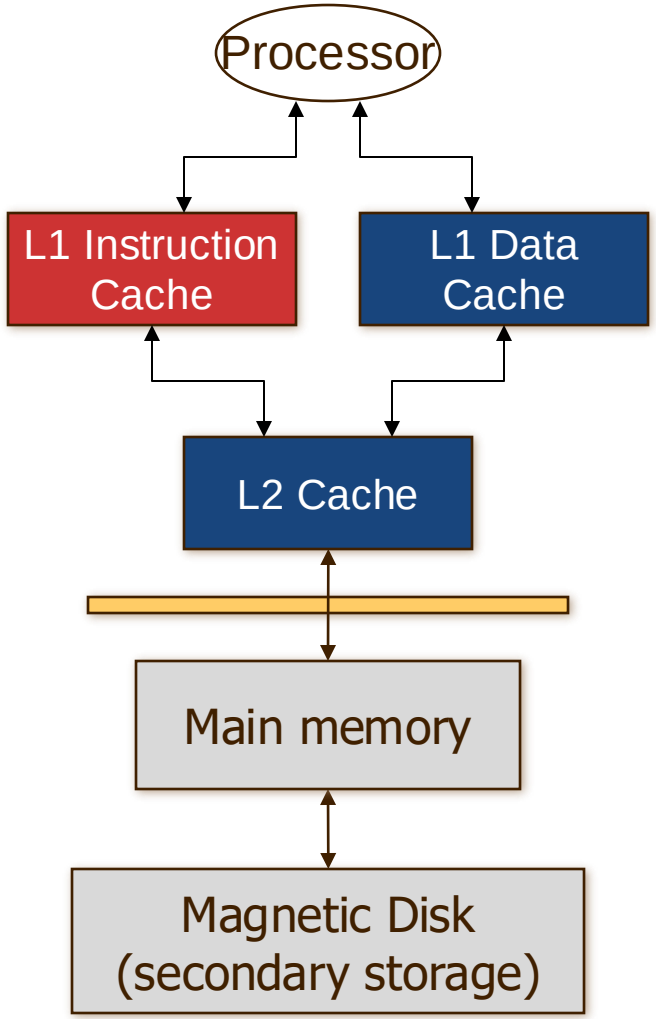


香港科技大學
THE HONG KONG UNIVERSITY OF SCIENCE AND TECHNOLOGY

# Example: Steps on an Instruction Cache Miss

- **Send the PC value to the memory**
- **Instruct main memory to perform a read and wait for completion**
- **Write the (instruction) cache entry, i.e.**
  - Put the data from memory in the data portion of the entry
  - Write the upper bits of the PC into the tag field
  - Turn the valid bit on
- **Restart the instruction execution at the first step**
- **Which will re-fetch the instruction, this time finding it in the cache**

- **Control of the cache on an instruction access is essentially identical:**
- **On a miss, simply stall the CPU until the memory responds with instr.**

香港科技大學
THE HONG KONG UNIVERSITY OF SCIENCE AND TECHNOLOGY

# Block Replacement

- When a cache miss occurs, we must decide which block to replace
- Why block replacement is needed?

**Block replacement for**

- **Direct mapped**: only one candidate (**trivial case**)
- **Set associative**:
  - Prefer non-valid entry (i.e. valid bit =0), if there is one
  - Otherwise, choose among entries in the set

**Two primary replacement policies for associative caches**

❶ **Random**:

➢ Candidate blocks are randomly selected to spread allocation uniformly

❷ **Least recently used** (LRU):

➢ The candidate is the block that has not been used for the longest time

➢ Costly to implement for a degree of associativity higher than 2 or 4

香港科技大學
THE HONG KONG UNIVERSITY OF SCIENCE AND TECHNOLOGY

# LRU Replacement Policy

Upon miss:

- Replace the victim from the LRU position with miss address
- Move the miss address to the MRU position
- Heuristic: the LRU is not referenced for a long time, good candidate

Upon hit:

- Move the hit address to the MRU position
- Then, pack the rest
- Heuristic: the one just got hit should be the last one to be replaced

香港科技大學
THE HONG KONG UNIVERSITY OF SCIENCE AND TECHNOLOGY

# Example of LRU Replacement Policy

- Assume the cache is **4-way set-associative**
- Consider block address stream below (from left to right):
- **0011010, 0010010, 0110010, 1000010, 0001010, 0010010, 0100010**
- All these block addresses mapped to same set "010"
- Question: which blocks remain in the set at the end?

| | | | | | | | | |
|---|---|---|---|---|---|---|---|---|
| MRU → | — | 0011 | 0010 | 0110 | 1000 | 0001 | 0010 | 0100 |
| | — | — | 0011 | 0010 | 0110 | 1000 | 0001 | 0010 |
| | — | — | — | 0011 | 0010 | 0110 | 1000 | 0001 |
| LRU → | — | — | — | — | 0011 | 0010 | 0110 | 1000 |
| | | miss | miss | miss | miss | miss | hit | miss |
| | | | | | | replace 0011 | | replace 0110 |

# Dealing with Dirty Data

- If the content of a cache entry is modified, it is considered as **dirty**
- What should we do upon block replacement?
- It is a question about how we update the memory

- Two options:
  - Write-back
  - Write-through

香港科技大學
THE HONG KONG UNIVERSITY OF SCIENCE AND TECHNOLOGY

# Write-Back vs Write-Through

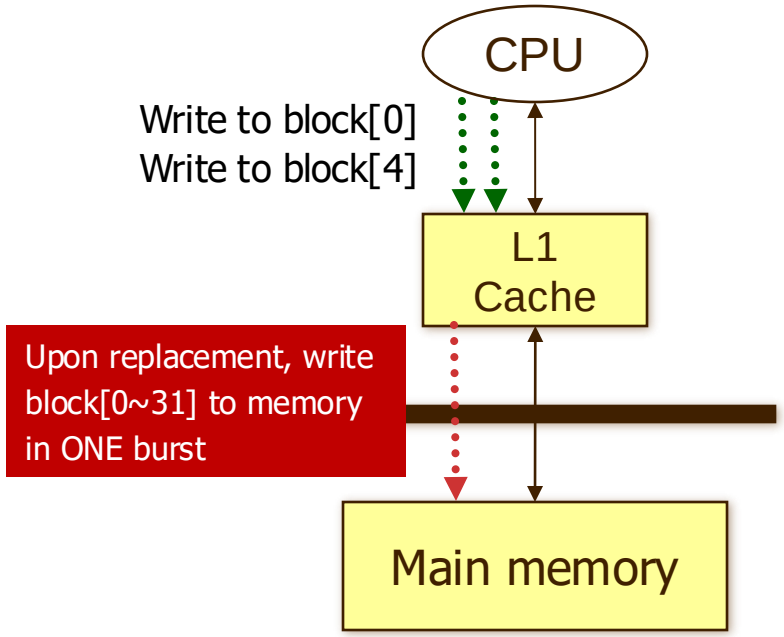


**Write-Back**

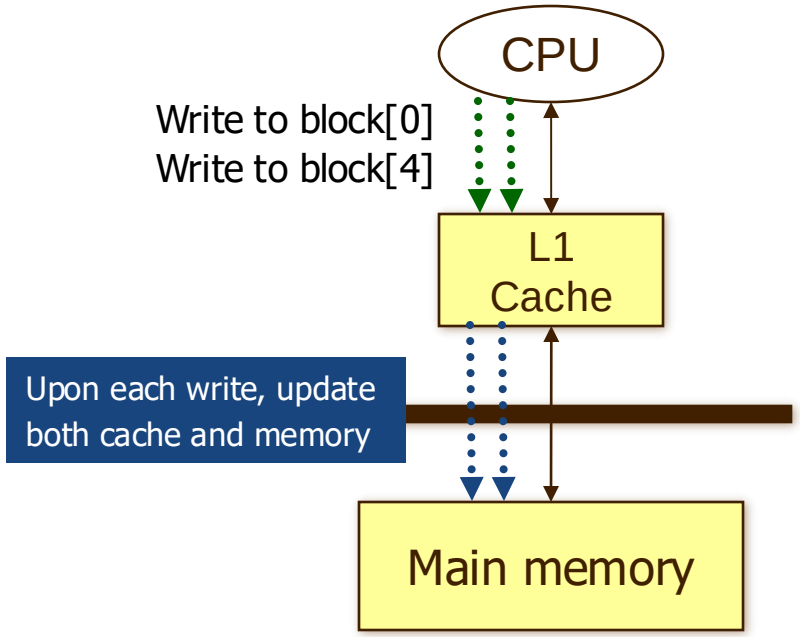


**Write-Through**

香港科技大學
THE HONG KONG UNIVERSITY OF SCIENCE AND TECHNOLOGY

# Write-Back Strategy

**Upon write access by processor**

- The information is written **only to the block in the cache**, not memory

**When the block becomes the candidate of replacement**

- **The dirty block is written back to the main memory**

Advantages

- Processor can write individual words at the rate of the cache (not memory)
- Multiple writes to a block are merged into one write to main memory
- Since the entire block is written, system can make effective use of a high bandwidth transfer

- As CPU speed increases at a rate faster than DRAM-based memory, more and more caches use the write-back strategy

香港科技大學
THE HONG KONG UNIVERSITY OF SCIENCE AND TECHNOLOGY

# Write-Through Strategy

**Upon all memory accesses**

- **The information is written to both the block in the cache and memory (memory is always up-to-date)**

**Advantages**

- **Handling of misses is simpler and cheaper**
  - Because they do not require a block to be written back to memory
- **Write-through is easier to implement than write-back**

**Disadvantages**

- **Multiple writes to the same location consume memory bandwidth**
- **Waste of bandwidth as compared to write-back strategy**
- **Potentially slow down the reads to memory**

Notes: A write buffer is needed for a high-speed system if write-through strategy is used
A write buffer is a queue to hold data while data are waiting to be written to memory


THE HONG KONG UNIVERSITY OF SCIENCE AND TECHNOLOGY

# VIRTUAL MEMORY

# Motivation

- **Protection**
  - Ensure that programs cannot interfere with each others
- **Sharing of memory between programs to increase memory utilization**
  - As running programs only actively use a fraction of the memory
- **Allowing a program to exceed the size of the main memory**
  - Use secondary storage (e.g. magnetic disks) to backup
  - i.e. make use of the main memory as a "cache" for magnetic disks
- **In systems today, memory address in our programs is considered as virtual address**

Virtual memory is the technique to seamlessly map virtual addresses to physical addresses
(seamlessly = automatically map in hardware)


THE HONG KONG UNIVERSITY OF SCIENCE AND TECHNOLOGY

# Basic Concept

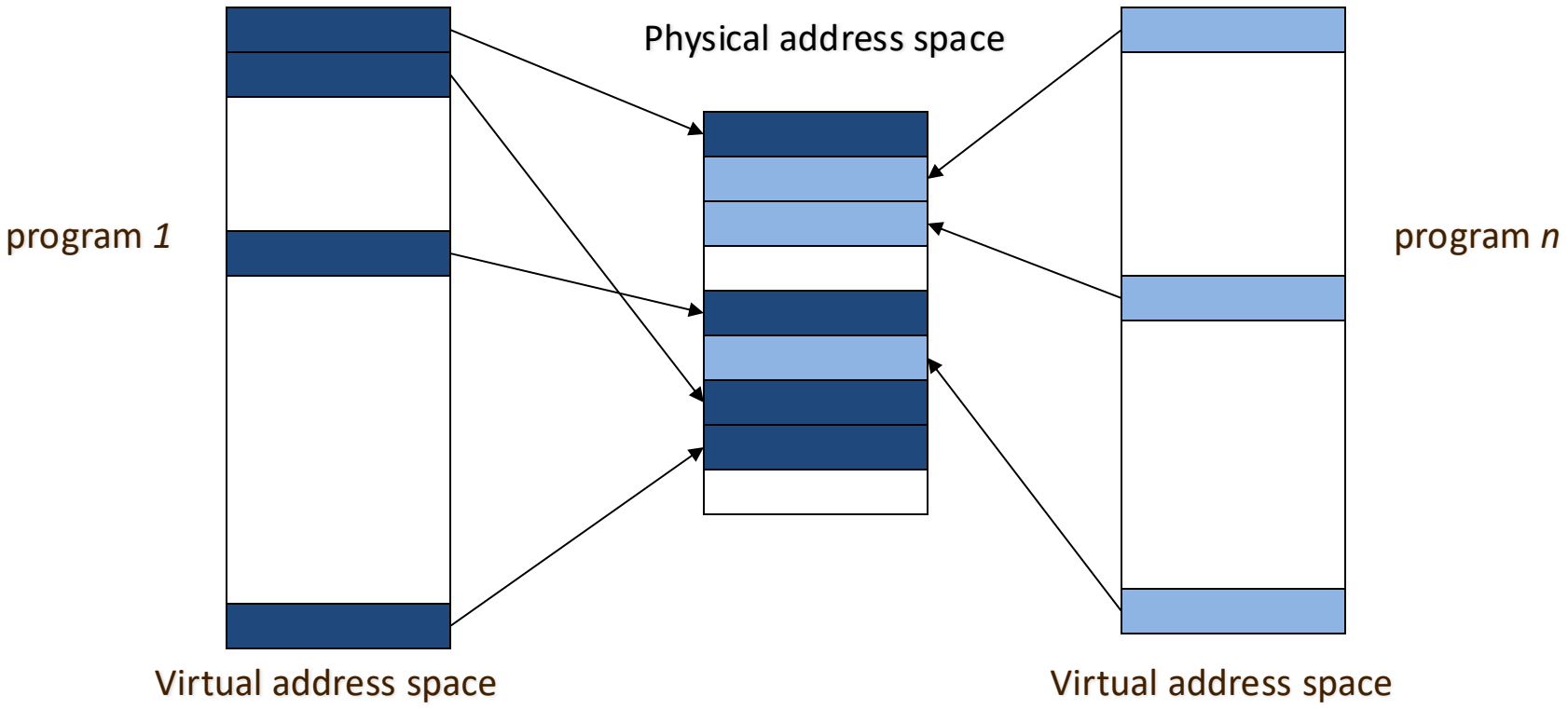

# Virtual Address vs. Memory Address

The processor generates virtual addresses

- While the memory is accessed using physical addresses

That means, programs see the virtual address space

- While the system sees the physical address space
- Virtual address space is as big as a register can address

Ideally, physical address = mapping_function(virtual address)

- Mapping function can be implemented as a table in system memory
- But, if we map at word or block level, the table is too big!
- Instead, split the virtual and physical address space into pages

- A typical page size is 4Kbytes
- Then, the mapping is between virtual and physical pages

香港科技大學
THE HONG KONG UNIVERSITY OF SCIENCE AND TECHNOLOGY

## More precisely

- Portion of virtual memory, when not currently in use, is stored in secondary storage
- When it is requested later, OS **shuttles** it into the memory, **replacing** other portions not currently in use (replacement policy answers this part)

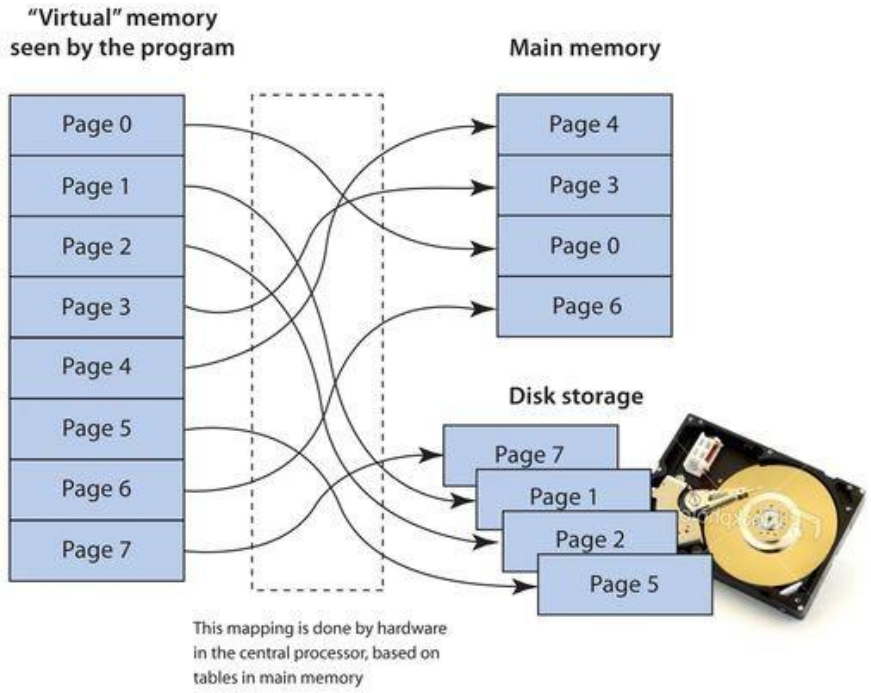



THE HONG KONG UNIVERSITY OF SCIENCE AND TECHNOLOGY

# How does virtual memory work?

- Virtual page size = physical page size

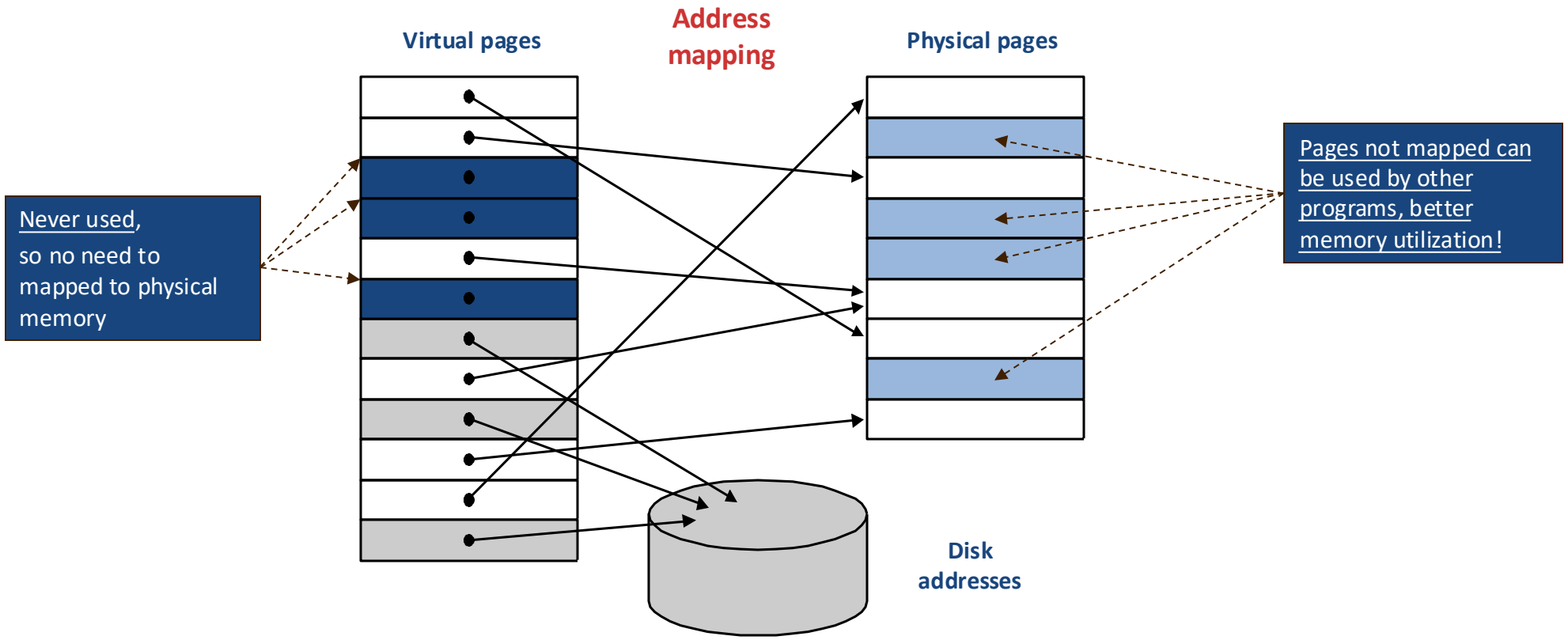

# Page Table

- Mapping virtual addresses to physical addresses through a page table
- It is a structure that resides in the memory
- Starting address of the page table is stored in the page table register
- Each page table entry stores
  - a valid bit to indicate if the mapping exists, and
  - the corresponding physical page number
- Since every possible virtual page is represented in the page table,
- There is no need to have a tag field

香港科技大學
THE HONG KONG UNIVERSITY OF SCIENCE AND TECHNOLOGY

# Address Translation

- Virtual address space: 4 GB ($2^{32}$)
- Maximum main (physical) memory size: 1 GB ($2^{30}$)
- Page size: 4 KB ($2^{12}$)

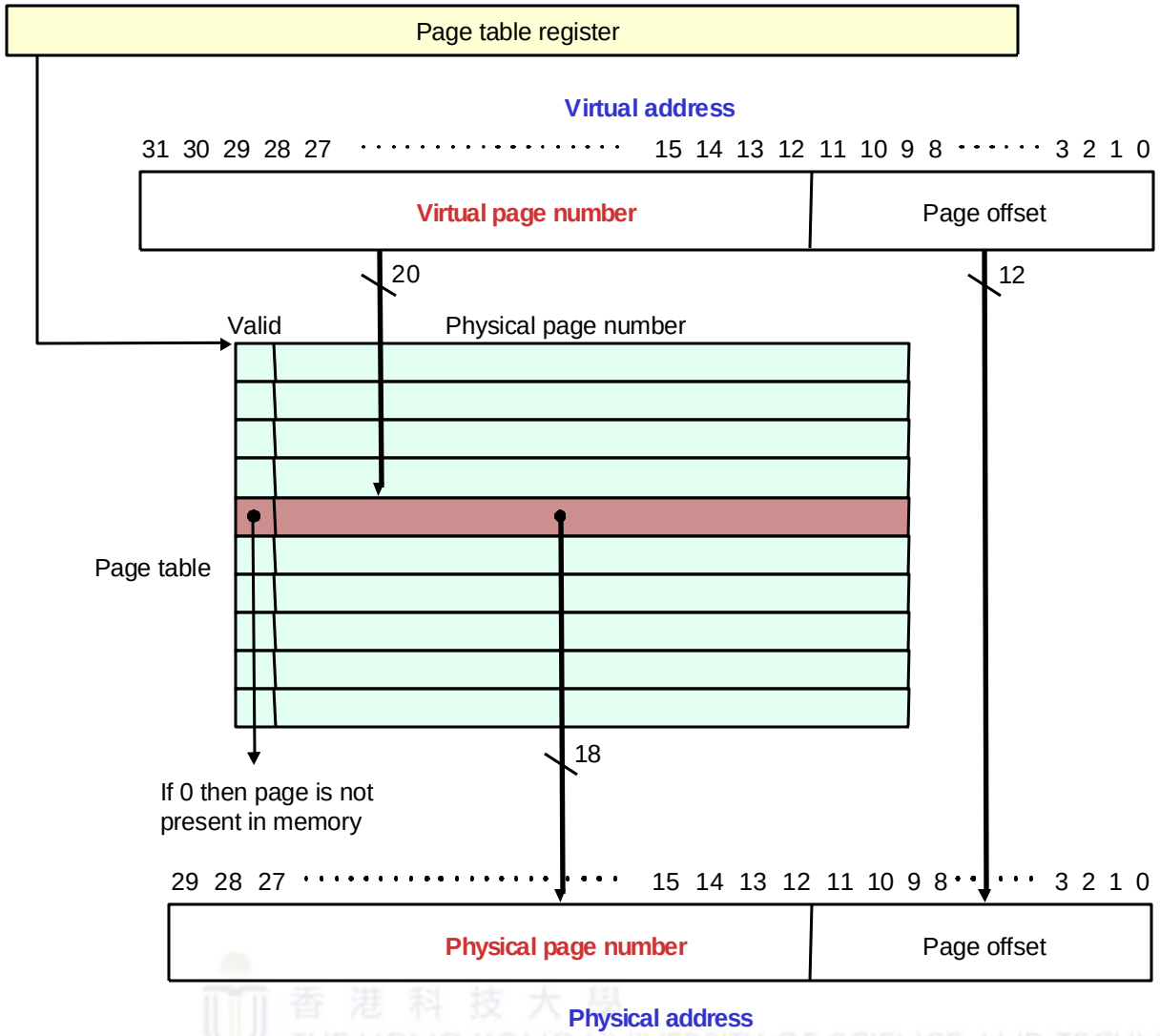

# Example

- **Page size = 4Kbyte ($2^{12}$)**
- **Virtual address space = $2^{32}$ bytes**
- **Physical address space = $2^{28}$ bytes**
- **What are the sizes of the virtual and physical page number?**
  - Size of virtual page number = 32 – 12 = 20 bits
  - Size of physical page number = 28 – 12 = 16 bit
- **What is the physical address for 0xFFF21340 using page table below?**
  - 0xFFF21340 = 1111 1111 1111 0010 0001 0011 0100 0000
  - Virtual page number = 0xFFF21
  - Physical address = 0x0AC0340

Entry 0xFFF20

| |
|---|
| … |
| 0x0001 |
| 0x0AC0 |
| 0x0AB0 |
| 0x0200 |
| … |

Page table

香港科技大學
THE HONG KONG UNIVERSITY OF SCIENCE AND TECHNOLOGY

# Page Faults

- It is possible that a mapping does not exist upon first access
- Try to map through the page table results in a **page fault**
- **Operating system is invoked to resolve the page fault**
  - Resolve means find the mapping or setup appropriate mapping
- **A page fault usually has an enormous penalty**
  - Page faults are handled in software
  - It can take millions of clock cycles to process
  - Dominated by the time to get the first word for typical page sizes
  - Program execution is stalled until page fault is resolved
- So, **pages should be large enough**
  - Too small the page size, too often we see page faults
  - Too large the page size, higher chances of page fragmentation

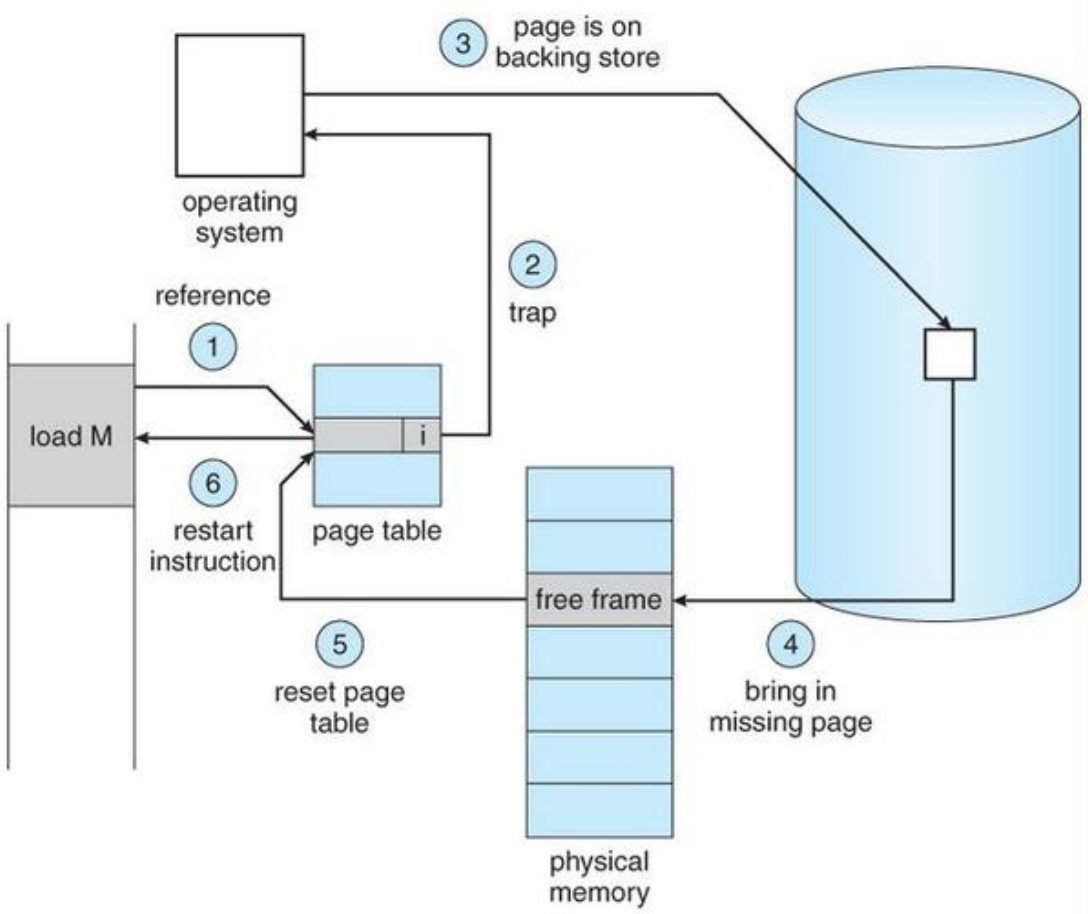


香港科技大學
THE HONG KONG UNIVERSITY OF SCIENCE AND TECHNOLOGY

# Fast Address Translation

## Problem with pure page table approach

- **Page tables are in main memory**
- **Every memory access by a program can take at least twice as long**
  - One memory access to obtain the physical address
  - The second access to get the data
- **Bad performance!**

## Solution

- **Translation-lookaside buffer (TLB), a cache copy of the page table**
  - TLB relies on the locality of reference to the page table
  - When a translation for a virtual page number is used, it will probably be needed again in the near future as the references to the words on that page have both temporal and spatial locality
- **i.e. TLB is a special cache keeping track of recently used translations**
- **TLB is usually a small fully-associative cache, (e.g. 16~64 entries)**

香港科技大學
THE HONG KONG UNIVERSITY OF SCIENCE AND TECHNOLOGY

# Translation-Lookaside Buffer (TLB)

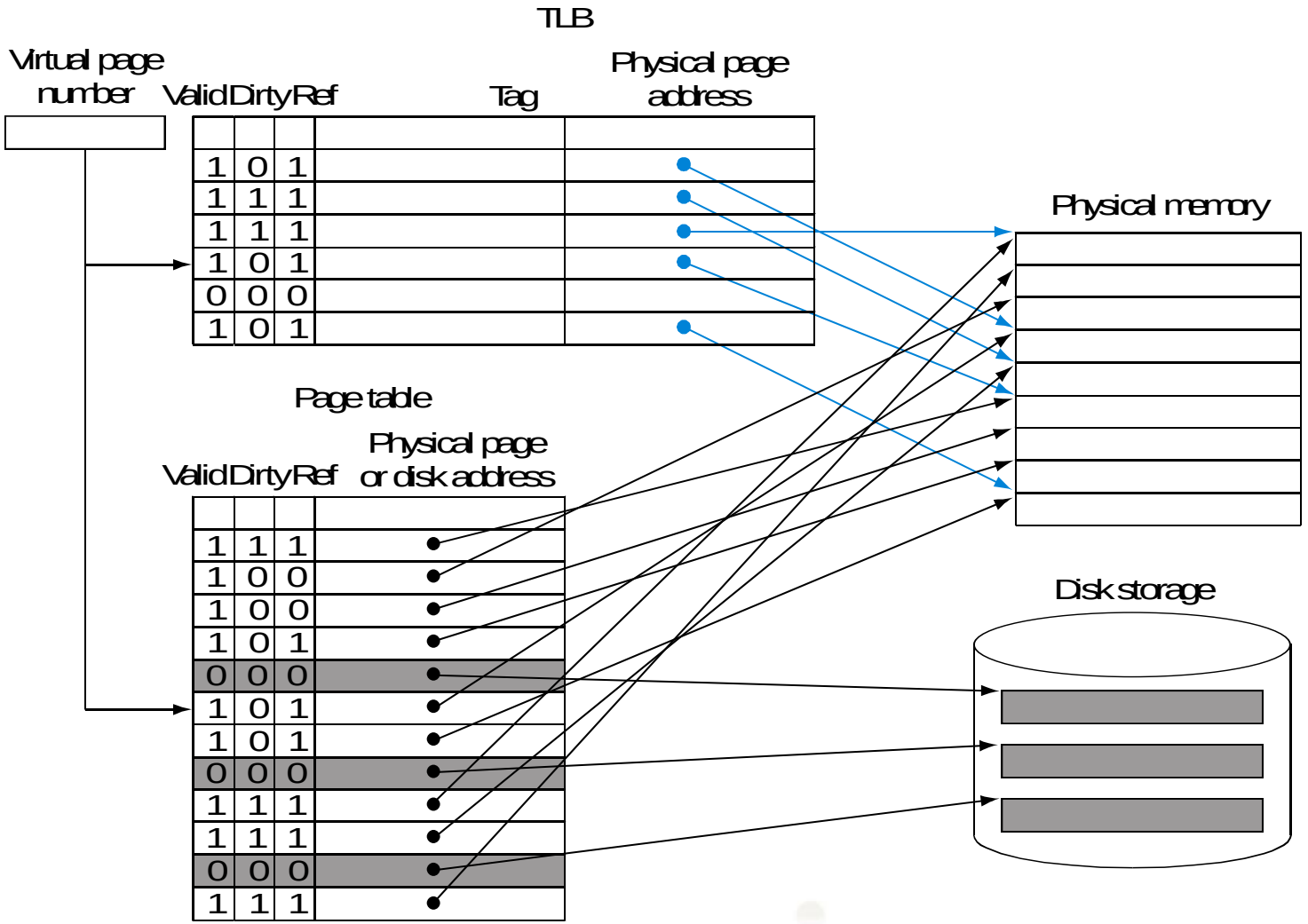

# Working with TLB and Page Table

- **Upon each memory access**
  - Mapping for virtual address generated by CPU is first looked up in TLB
  - If found, do the translation and done
  - If not found, then looked up in the page table residing in memory

- **If mapping (i.e. translation) not found in the page table,**
- **Page fault!**
  - OS is invoked to handle the page fault
  - After OS resolve the page fault, the memory access is restarted

香港科技大學
THE HONG KONG UNIVERSITY OF SCIENCE AND TECHNOLOGY

# Key Knowledge Points

- **Ordinary programs exhibit two different notions of locality**
  - Temporal locality and spatial locality
- **Multilevel memory organizations achieve cost/performance tradeoff by exploiting the principle of locality**
- **Cache**
  - Data are transferred in blocks from main memory to cache upon misses
  - Block placement is direct-mapped, set-associative, or fully-associative
  - Block identification with tag and valid bit
  - Block replacement uses either random or least recently used (LRU)
  - The write strategy for caches is either write-through or write-back
- **Virtual memory**
  - The technique to seamlessly map virtual addresses to physical addresses
  - Needed for protection and efficient sharing of memory among programs
  - Mapping is implemented via a page table
  - TLB is cache copy of page table for the sake of performance

香港科技大學
THE HONG KONG UNIVERSITY OF SCIENCE AND TECHNOLOGY