COMP2611 COMPUTER ORGANIZATION
THE PROCESSOR: DATAPATH AND CONTROL

Major Goals

- **Present the design of MIPS processor**
  - A simplified version: **single-cycle implementation**
  - A more realistic pipelined version: **pipelined single-cycle implementation**

- **Illustrate the datapath & control in processor**
- **Study pipeline hazards and solutions**

- **Focus on implementing of a subset of the core MIPS instruction set**
  - **Memory-reference instructions**: `lw`, `sw`
  - **Arithmetic-logical instructions**: `add`, `sub`, `and`, `or`, `slt`
  - **Branch and jump instructions**: `beq`, `j`

香港科技大學
THE HONG KONG UNIVERSITY OF SCIENCE AND TECHNOLOGY

BUILDING A SINGLE-CYCLE DATAPATH

Big Picture

- First, understand how an instruction is executed before the design
- Then, split the execution of an instruction into multiple steps common to all instructions
- Next, implement each part separately
- Finally, put all these parts back together

香港科技大學
THE HONG KONG UNIVERSITY OF SCIENCE AND TECHNOLOGY

How is an Instruction Executed?

1. **Fetch the instruction from memory location indicated by program counter (PC)**

2. **Decode the instruction – to find out what to perform**
   Meanwhile, read source registers specified in the instruction fields
   - `lw` instruction require reading only one register
   - most other instructions require reading two registers

3. **Perform the operation required by the instruction using the ALU**
   - Arithmetic & logical instructions: execute
   - Memory-reference instructions: use ALU for address calculation
   - Conditional branch instructions: use ALU for comparison

4. **Memory access: `lw` and `sw` instructions**

5. **Write back the result to the destination register**
   Increment PC by 4 or change PC to branch target address to find next instruction to be executed

香港科技大學
THE HONG KONG UNIVERSITY OF SCIENCE AND TECHNOLOGY

MIPS Processor Overview

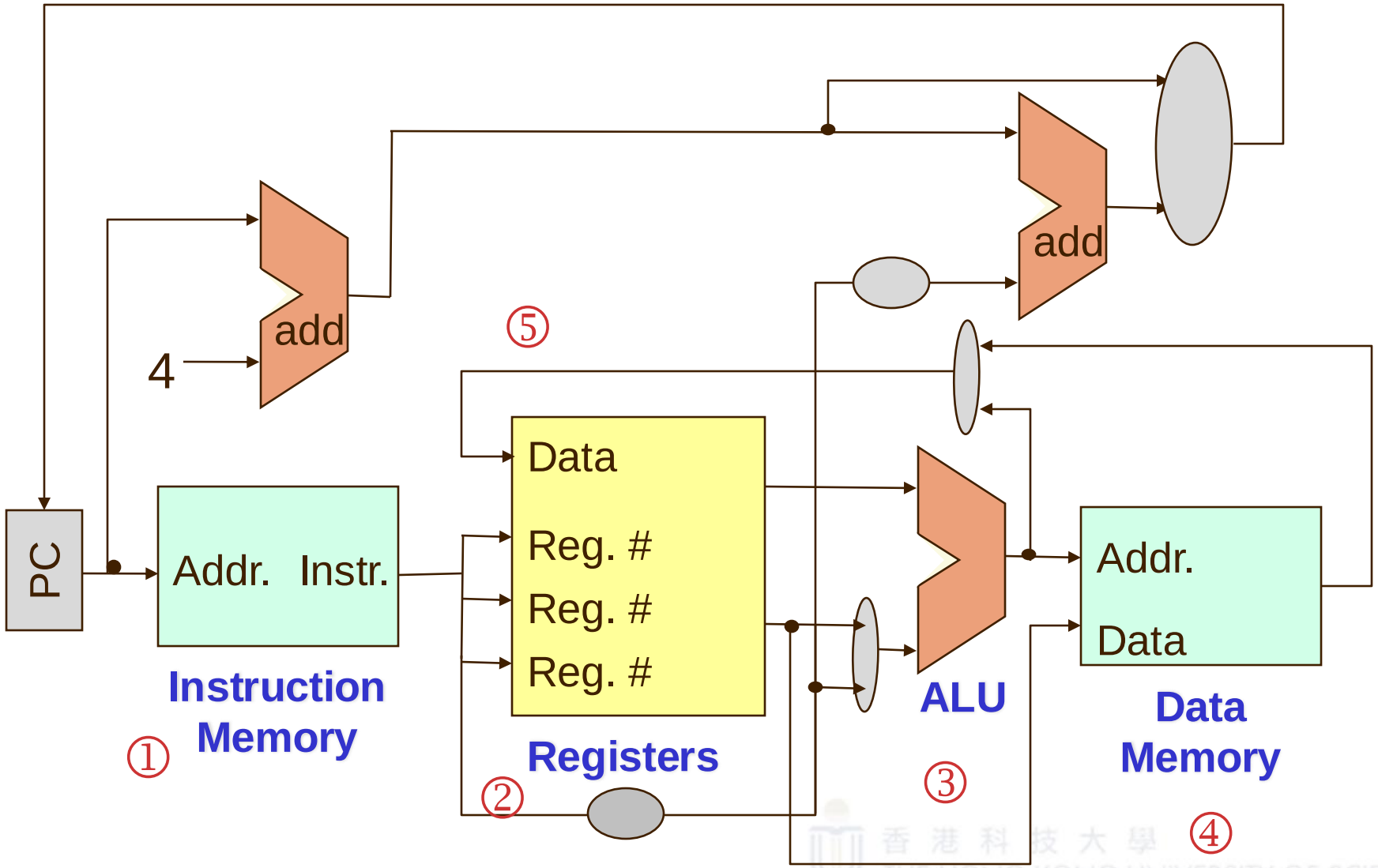

Anatomy of a Computer: Inside the Processor

- AMD Barcelona: 4 processor cores

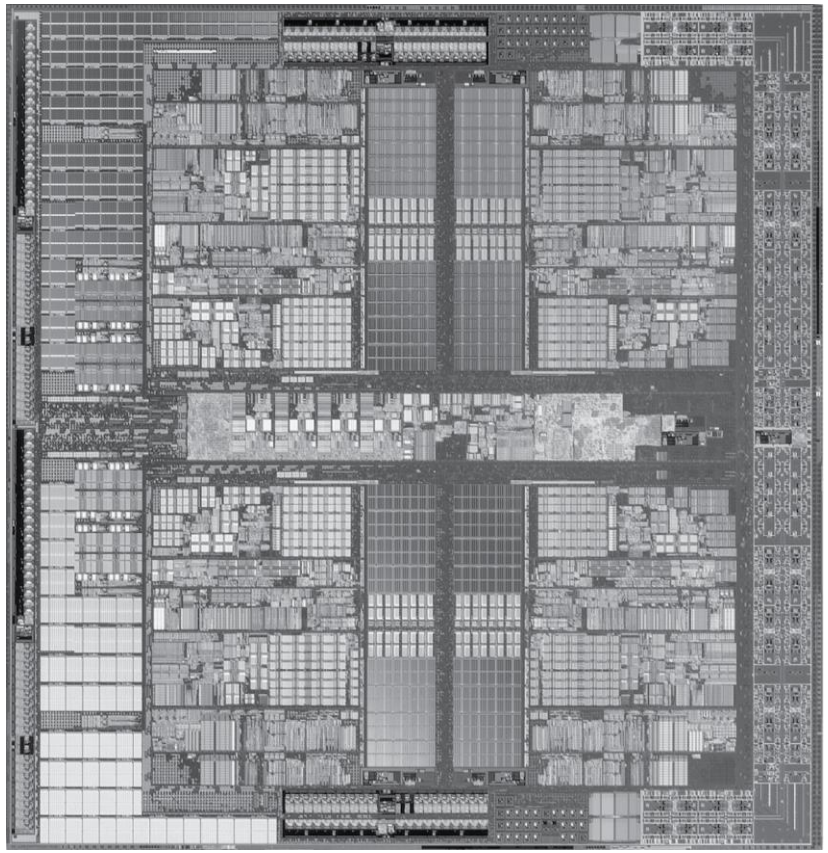

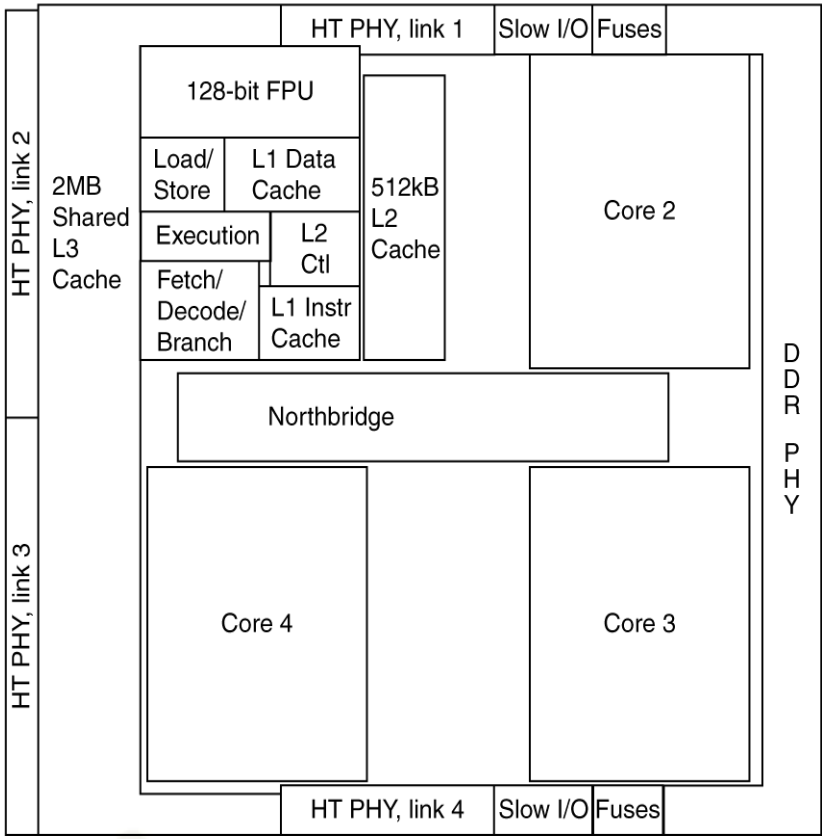

香港科技大學
THE HONG KONG UNIVERSITY OF SCIENCE AND TECHNOLOGY

Building a Datapath

- **Datapath**
  - Elements that process data and addresses in the CPU
  - E.g. Registers, ALUs, multiplexors, memories, …

- **We will build a MIPS datapath incrementally**
  - Refining the overview design

香港科技大學
THE HONG KONG UNIVERSITY OF SCIENCE AND TECHNOLOGY

Basic Building Blocks

- **Instruction memory**:
  - A memory unit that stores the instructions of a program
  - Supplies an instruction given its address
- **Program counter**:
  - A register storing the address of the instruction being executed
- **Adder**:
  - A unit that increments PC to form the address of next instruction

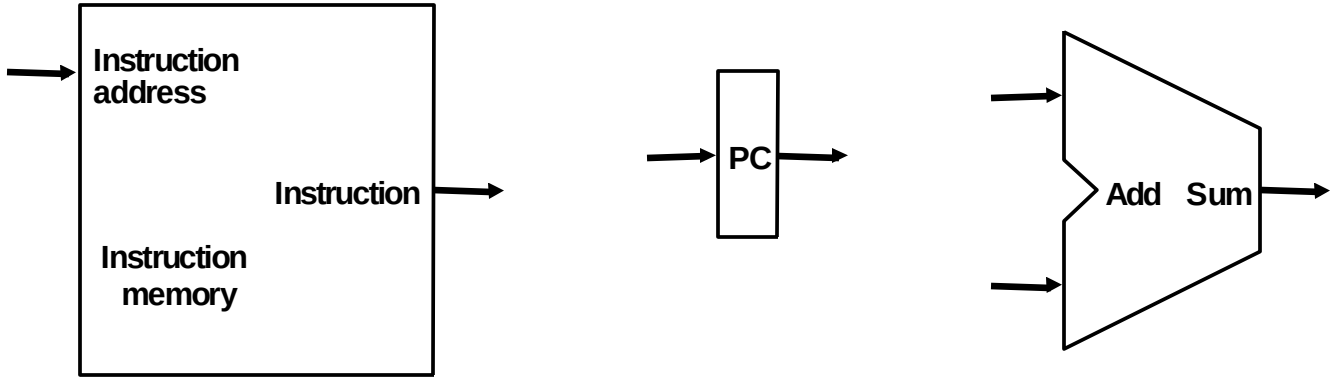

a. Instruction memory b. Program counter c. Adder

香港科技大學
THE HONG KONG UNIVERSITY OF SCIENCE AND TECHNOLOGY

Instruction Fetch

1. **Fetch the current instruction from memory using PC**
2. **Prepare for the next instruction**
   - By incrementing PC by 4 to point to next instruction (base case)
   - Will worry about the branches later

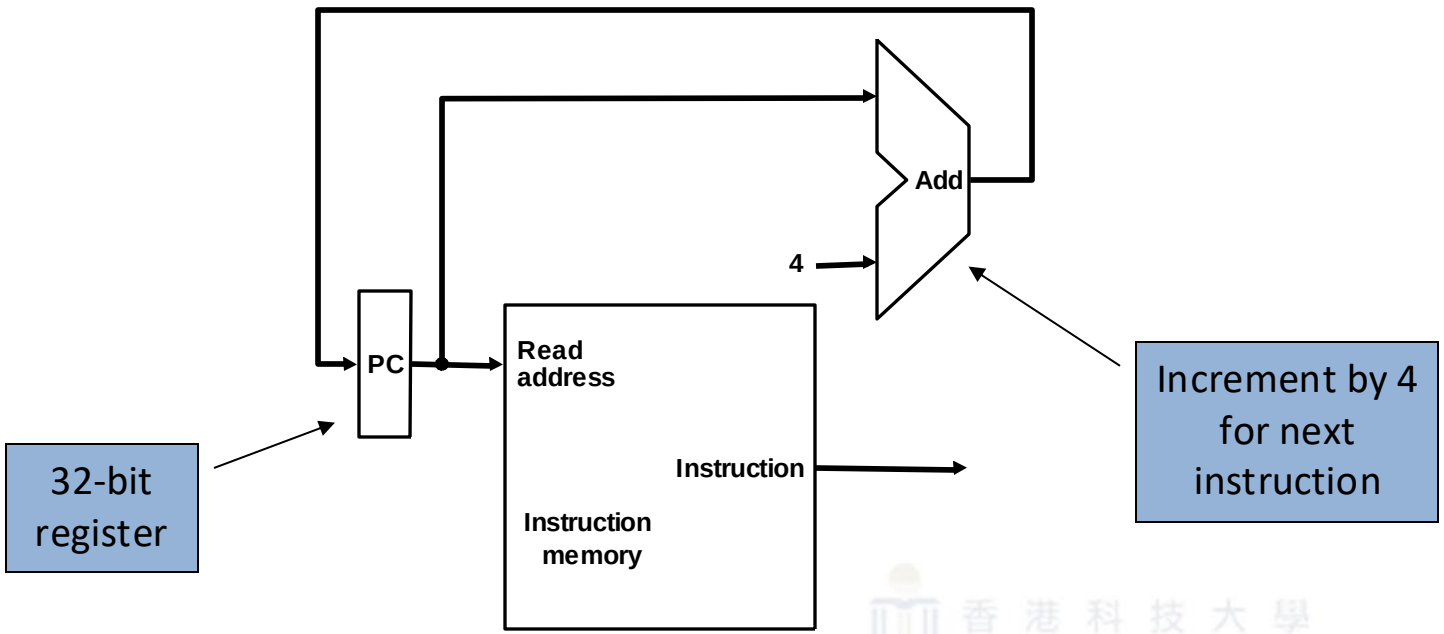

Operations for Different Types of Instructions

- **R-format arithmetic/logic instructions**
  - Read two register operands
  - ALU performs arithmetic/logical operation
  - Write register result
- **I-format load/store instructions**
  - Read base register operand
  - ALU adds base address with 16-bit sign-extend offset
  - Load: Read memory and update register
  - Store: Write register value to memory
- **I-format branch instructions**
  - Read register operands
  - ALU compares operands by subtracting and checking Zero output
  - Use ALU, subtract and check Zero output
  - Calculate branch target address with PC-relative addressing

香港科技大學
THE HONG KONG UNIVERSITY OF SCIENCE AND TECHNOLOGY

Datapath for Arithmetic/Logical (R-Type) Instr.

- E.g.: `add $t0, $s1, $s2`

0	17	18	8	0	32
000000	10001	10010	01000	00000	100000
6 bits	5 bits	5 bits	5 bits	5 bits	6 bits

Register	Value
s1	100
s2	200

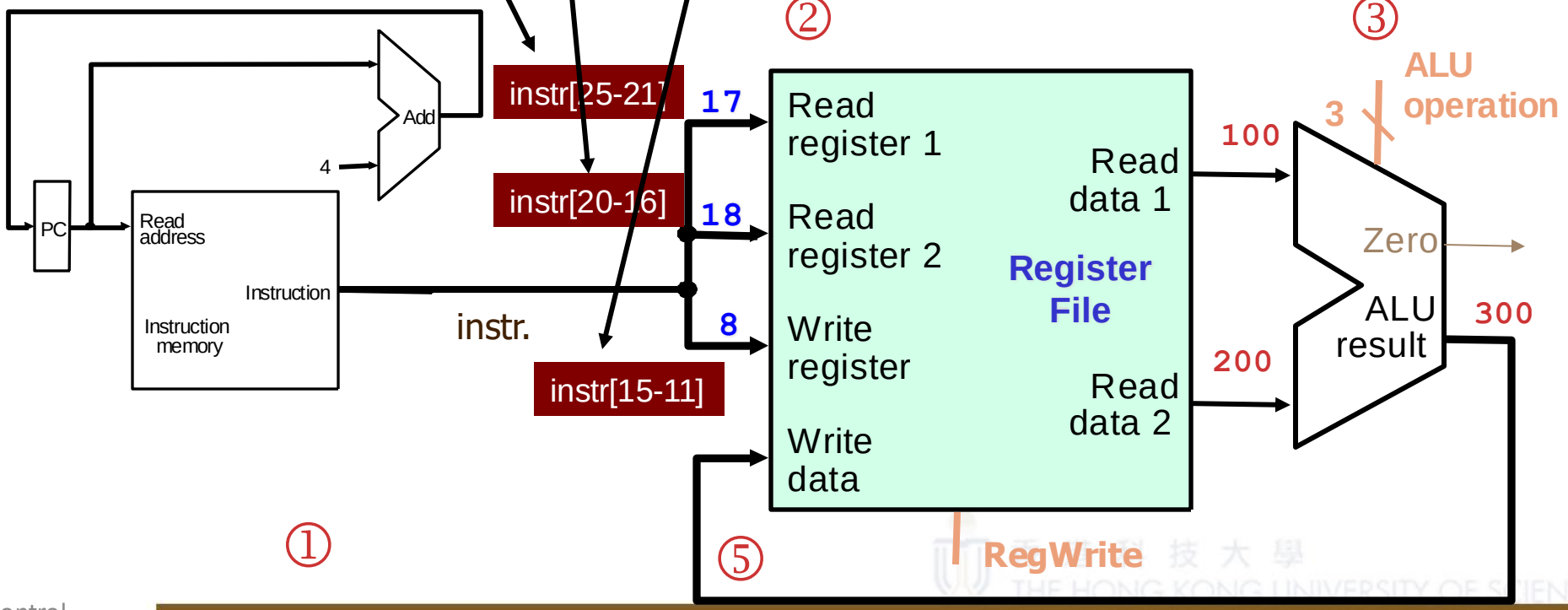

Datapath for Load/Store (I-Format) Instr.

- E.g.: `lw $t0, 1000($s1)`

35	17 (s1)	8 (t0)	1000 (immediate)
100011	10001	01000	0000 0011 1110 1000
6 bits	5 bits	5 bits	16 bits

Register	Value
t0	200
s1	100

Memory[1100]
50

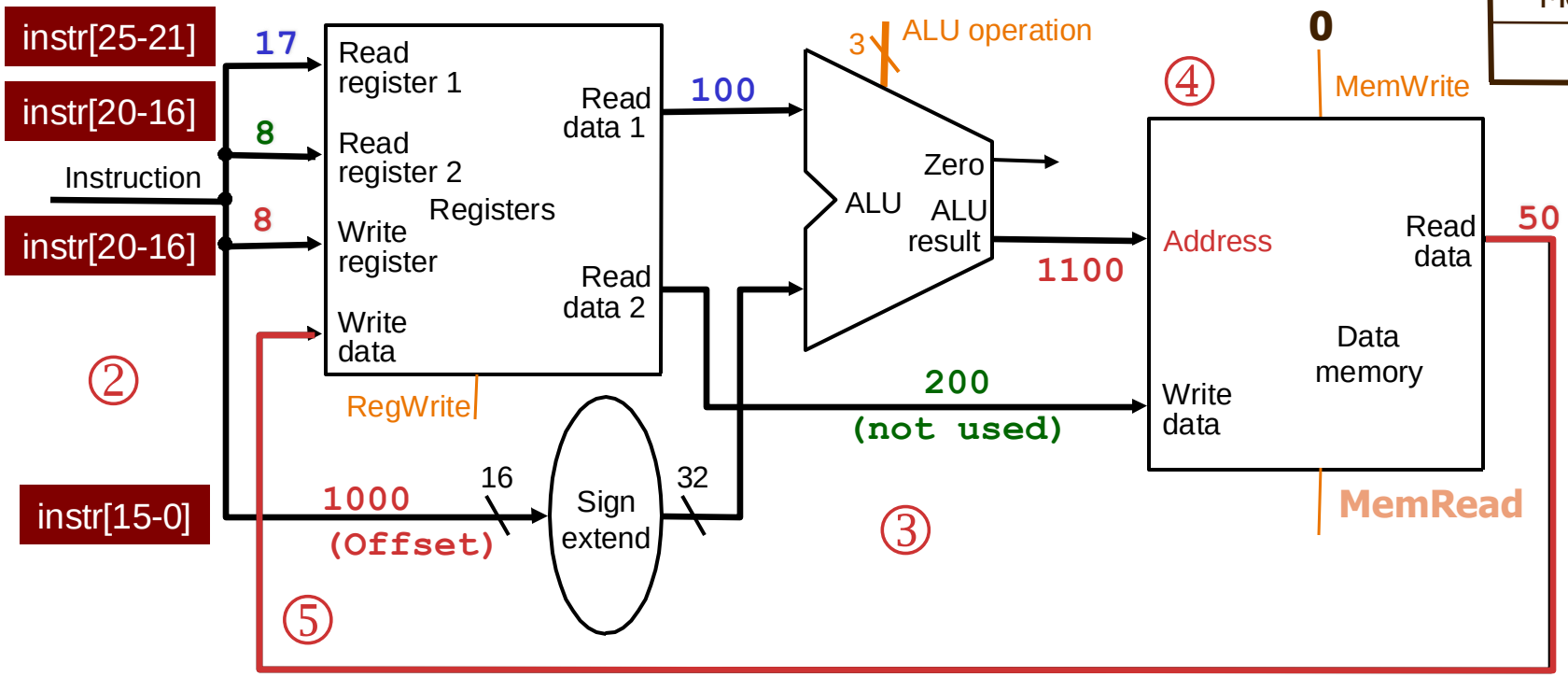

Note: For load word instruction, **MemWrite** has to be de-asserted so that the memory will not be modified by incoming write data.

Datapath for Branch (I-Format) Instr.

- E.g.: `beq $t0, $t1, 2`

```
1000:      beq $t0, $t1, L1
1004:      . 2 instructions
1008:      . are skipped
1012: L1: add $t0, $t1, $t2
```

Register	Value
t0	200
t1	200
PC	1000

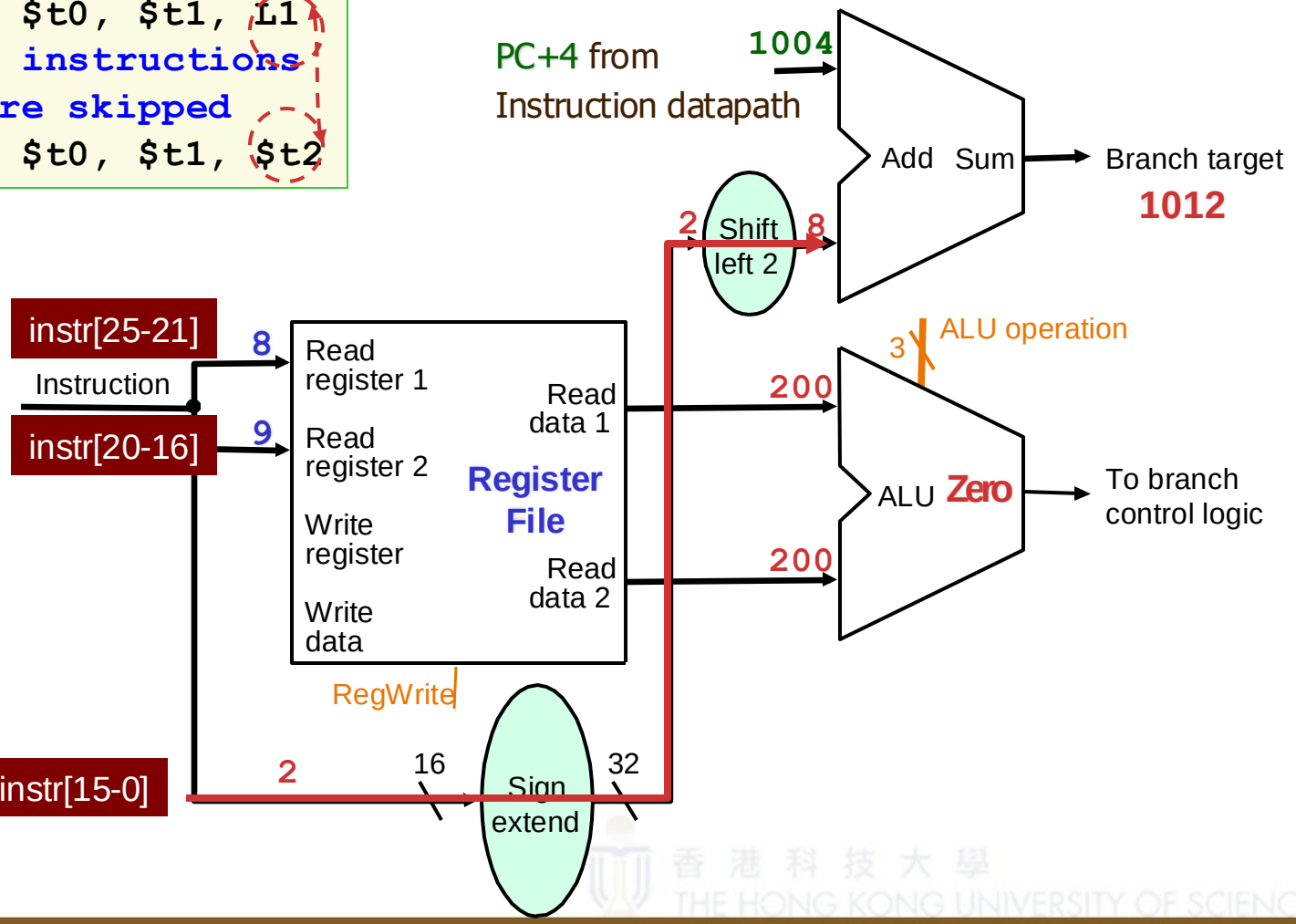

A Simple Single-Cycle Implementation

- We have already built a datapath for each instruction separately
- Now, we need to combine them into a **single datapath**

- **Key to combine**

Share some of the resources (e.g., ALU) among different instructions

Note:

- **This simple implementation is based on the (unrealistic) assumption**
  - i.e. all instructions take just one clock cycle each to complete
- **Implication:**
  - No datapath resource can be used more than once per instruction
  - Any element needed more than once must be duplicated
  - Instructions and data have to be stored in separate memories
  - Use multiplexers where alternate data sources are used for different instructions

香港科技大學
THE HONG KONG UNIVERSITY OF SCIENCE AND TECHNOLOGY

R-Type/Load/Store Datapath

- Use **ALUSrc** to decide which source will be sent to the **ALU**
- Use **MemtoReg** to choose the source of output back to **dest. register**

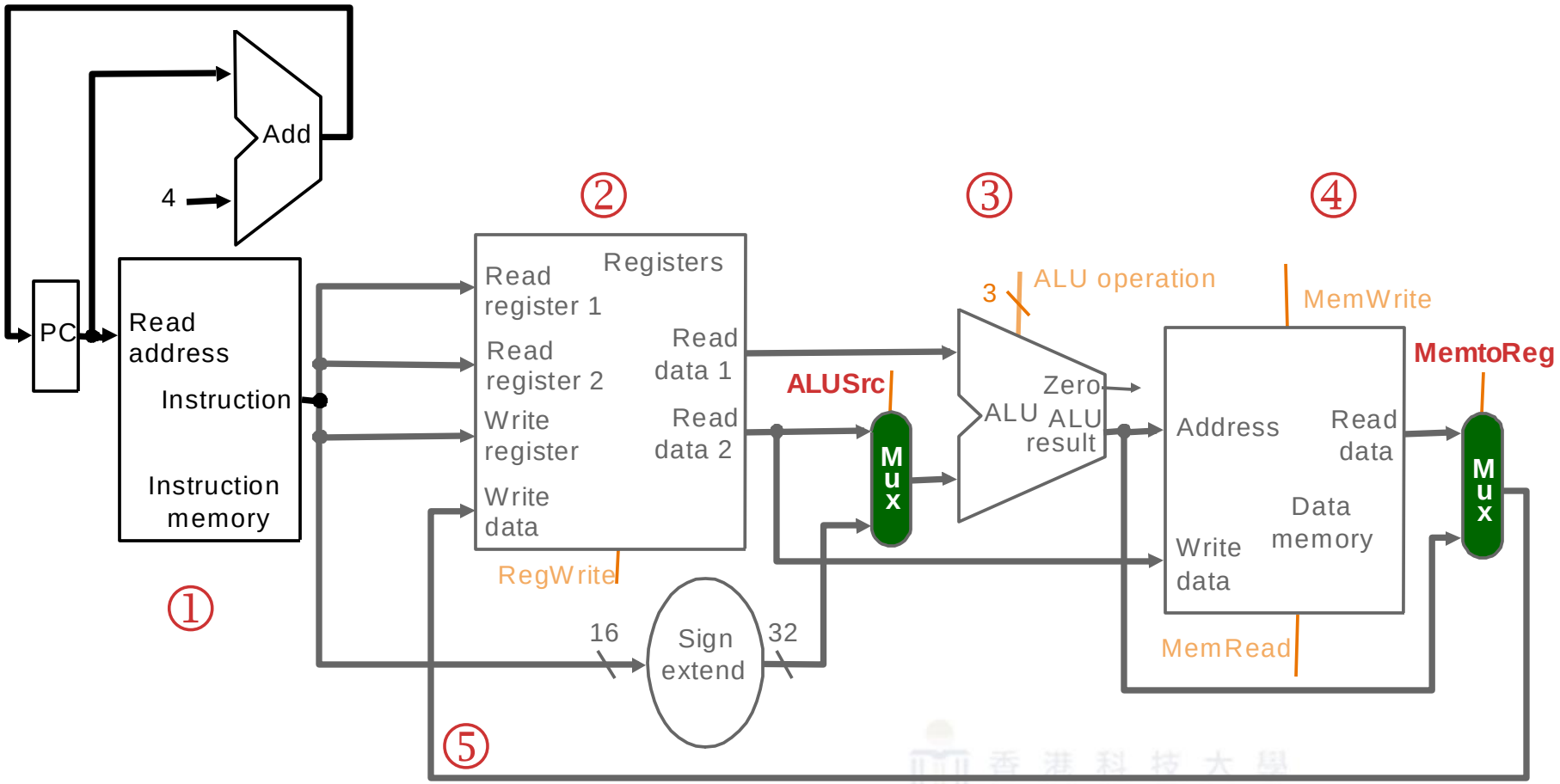

Combined Datapath for Different Instr. Classes

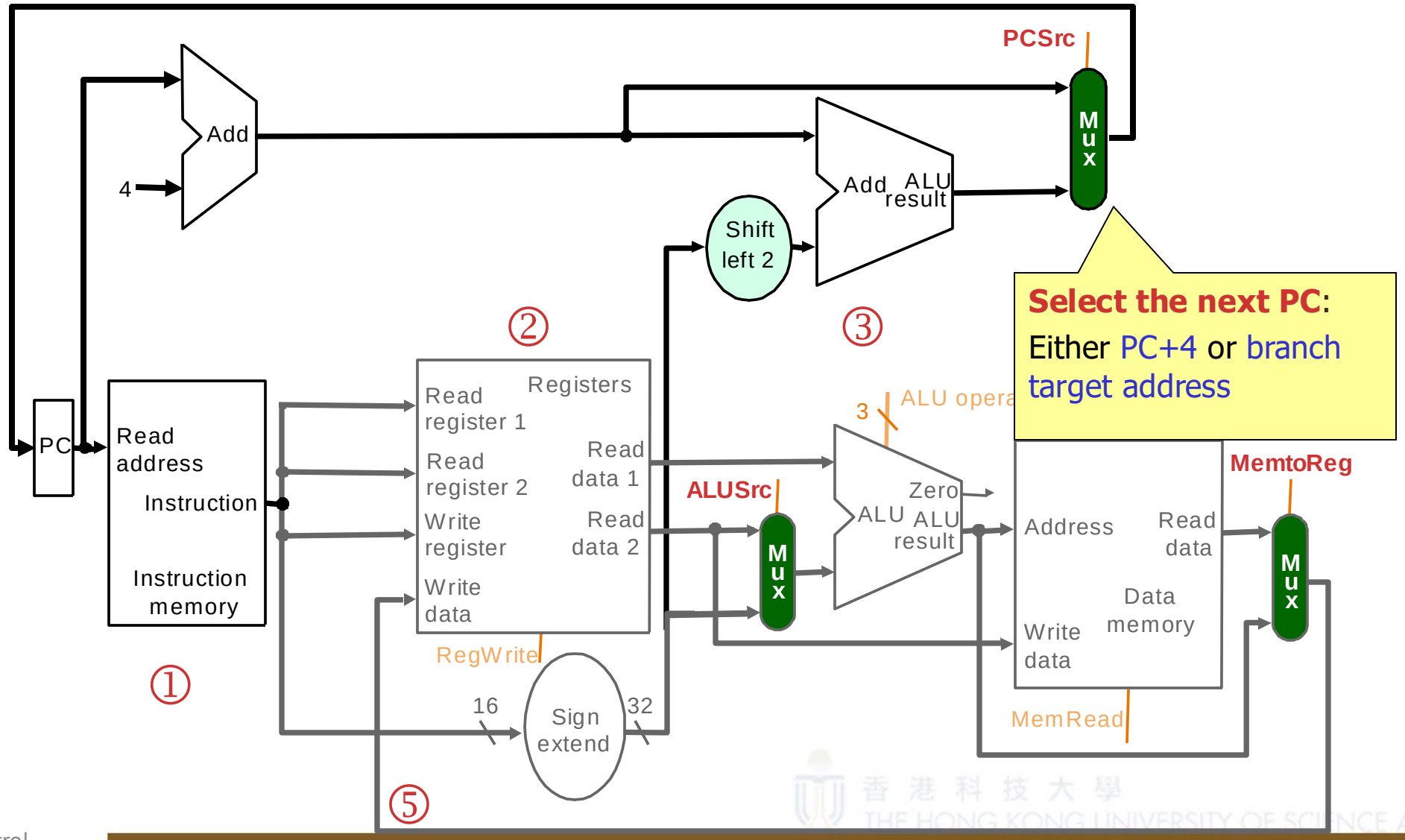

Full Datapath: Muxing Two Possible Destination Registers

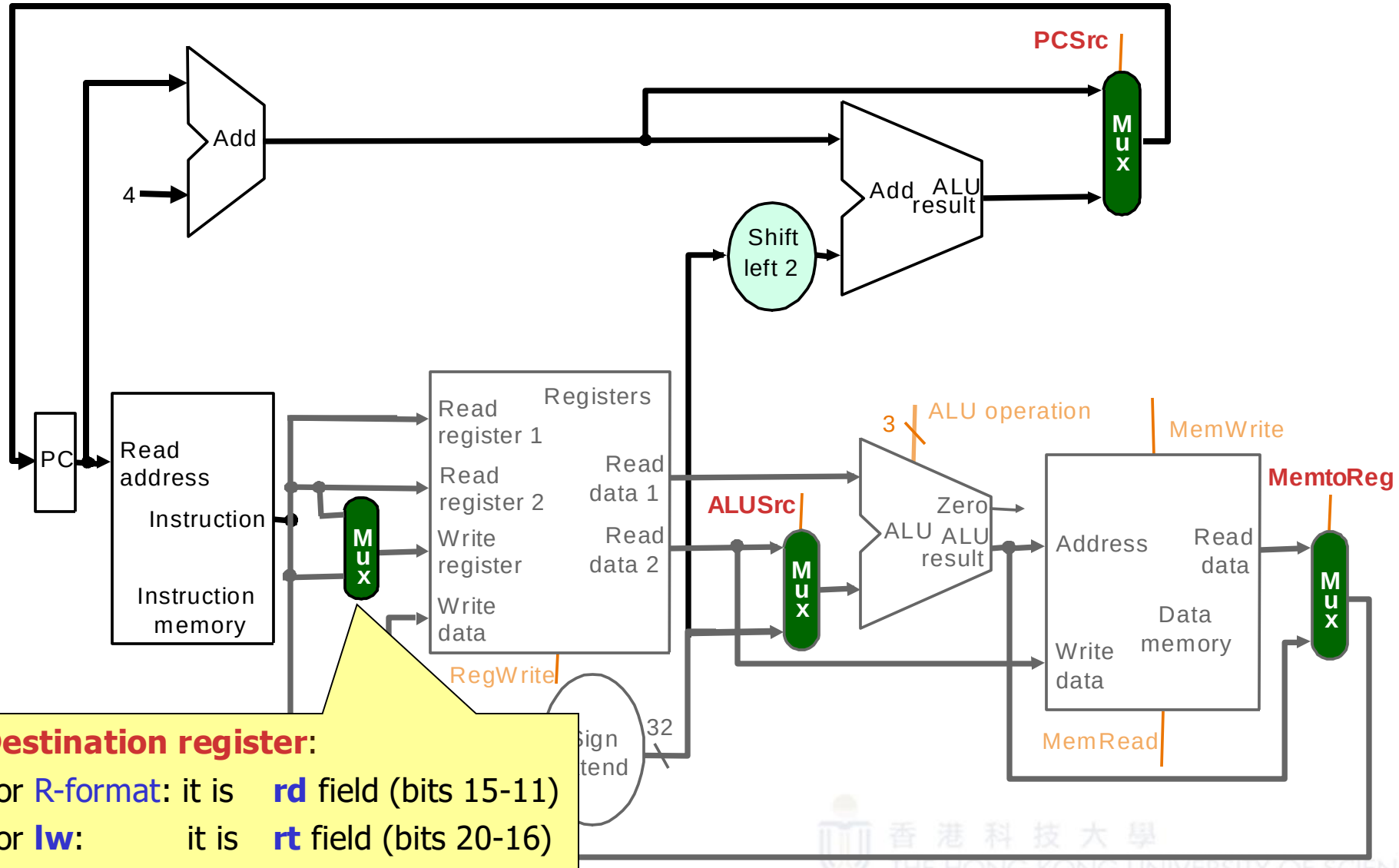

Destination register:

For R-format: it is **rd** field (bits 15-11)

For **lw**: it is **rt** field (bits 20-16)

SINGLE-CYCLE CONTORL

Overview: Datapath with Control

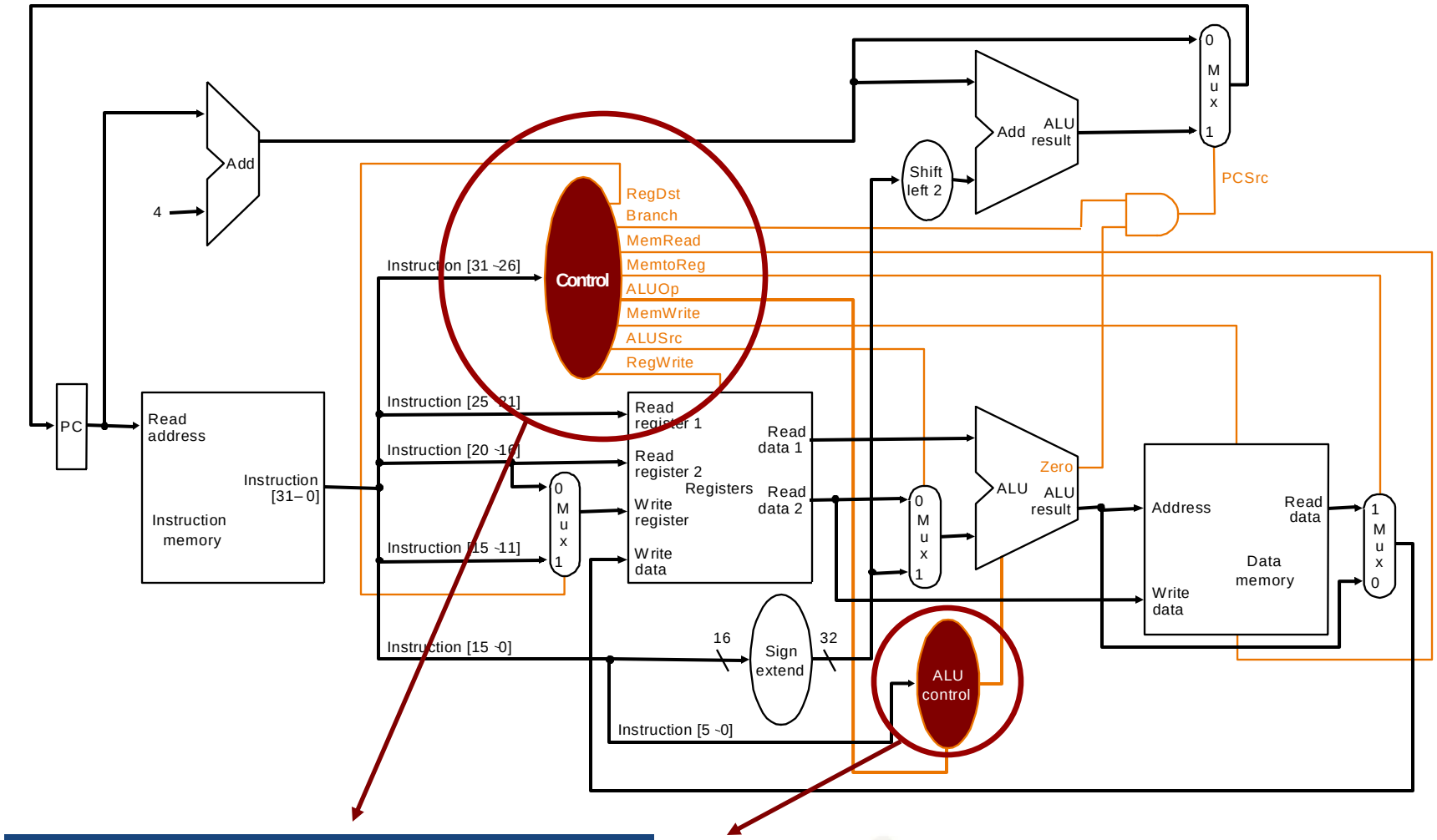

Topic we are going to discuss next

Control Unit

- **Control unit controls the whole operation of the datapath through control signals, e.g.**
  - read/write signals for state elements: RegWrite, MemWrite, MemRead
  - selector inputs for multiplexors: ALUSrc, MemtoReg, PCSrc, RegDst
  - ALU control inputs (4 bits) for different ALU operations

香港科技大學
THE HONG KONG UNIVERSITY OF SCIENCE AND TECHNOLOGY

First: ALU Control Unit

- **ALU is used for**
  - Load/Store: F = add
  - Branch: F = subtract
  - R-type: F depends on funct field

ALU Control Input	Function
0000	and
0001	or
0010	add
0110	subtract
0111	set on less than
1100	NOR

香港科技大學
THE HONG KONG UNIVERSITY OF SCIENCE AND TECHNOLOGY

Generation of ALU Control Input Bits

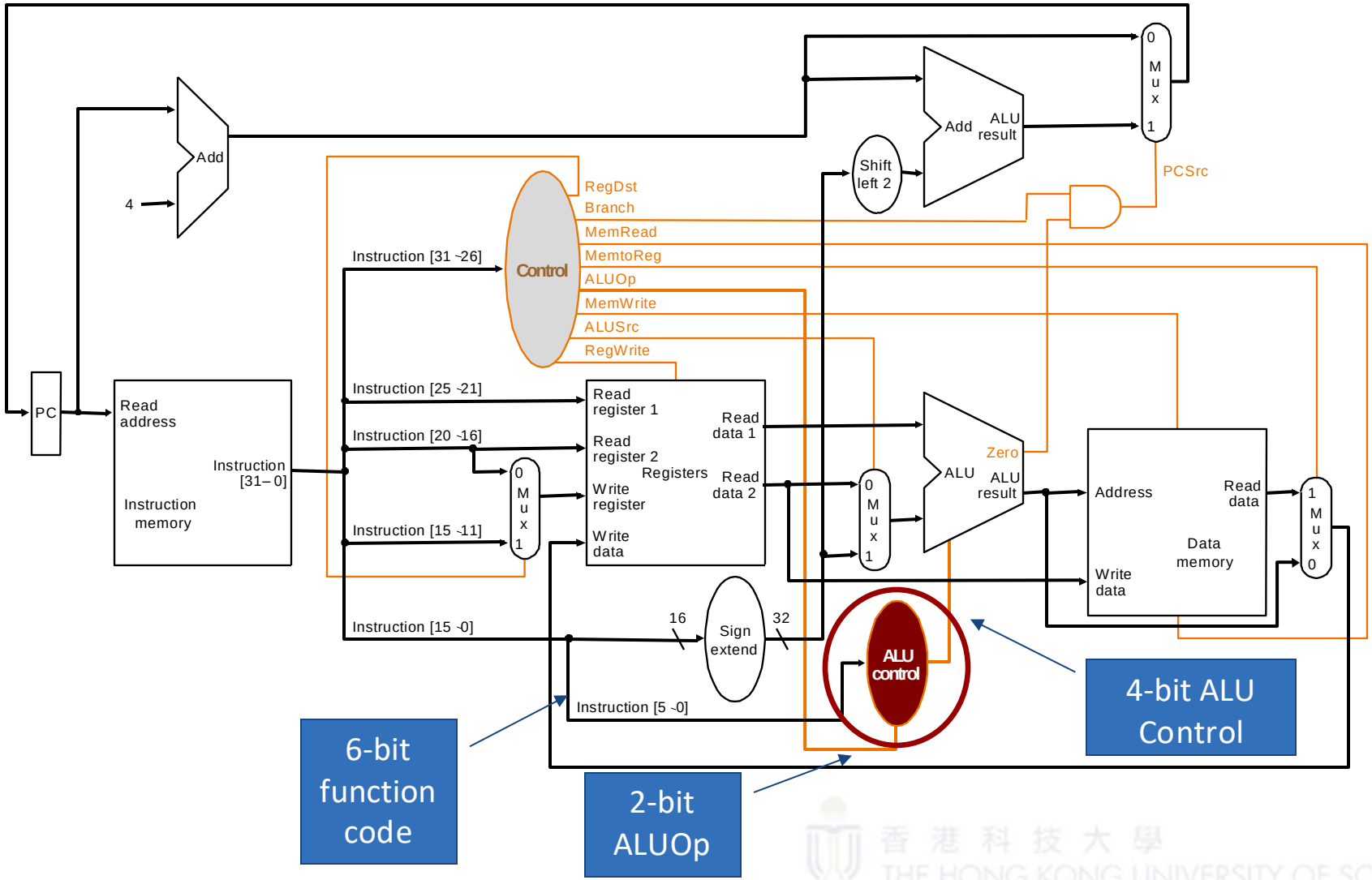

Generation of ALU Control Input Bits (cont.)

- **Two common implementation techniques:**
  - ❶ 1-level decoding
    - – more input bits
  - ❷ 2-level decoding
    - + less input bits, less complicated => potentially faster logic

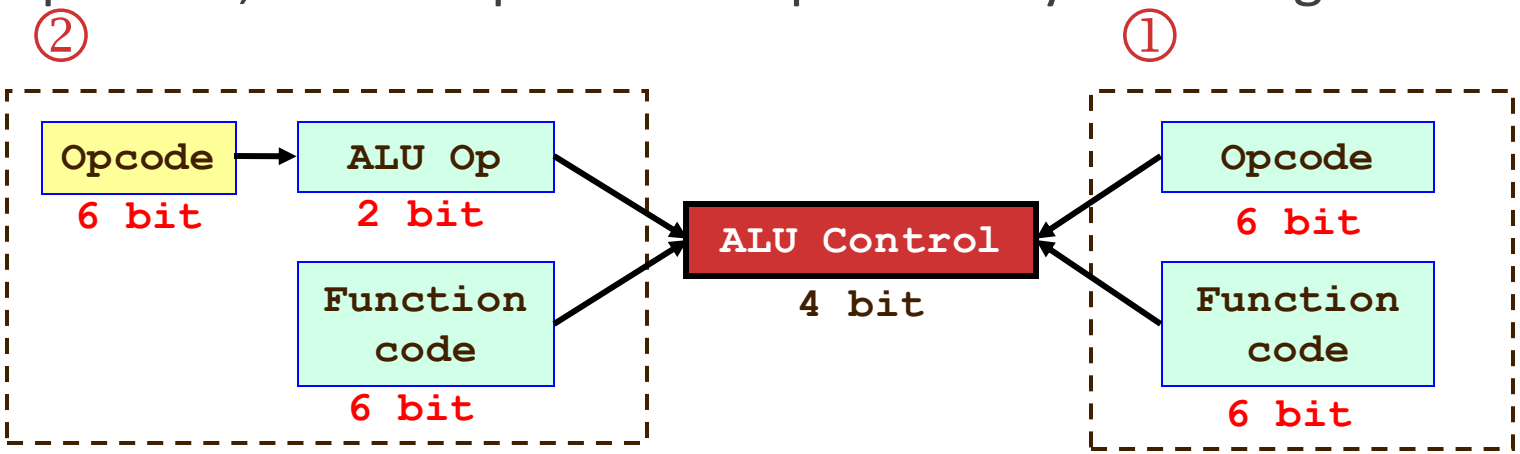

2 levels of decoding: only 8 inputs are used to generate 3 outputs in 2nd level

1 level only, a logic circuit with 12 inputs is needed

Implementing ALU Control Block

- Assume 2-bit ALUOp derived from opcode
- Combinational logic derives ALU control

opcode	ALUOp	Operation	funct	ALU function	ALU control
lw	00	load word	XXXXXX	add	0010
sw	00	store word	XXXXXX	add	0010
beq	01	branch equal	XXXXXX	subtract	0110
R-type	10	add	100000	add	0010
		subtract	100010	subtract	0110
		AND	100100	AND	0000
		OR	100101	OR	0001
		set-on-less-than	101010	set-on-less-than	0111

input input output

香港科技大學
THE HONG KONG UNIVERSITY OF SCIENCE AND TECHNOLOGY

Implementing ALU Control Block (cont.)

- Start from truth table
- Smart design converts many entries in the table to **don't-care** terms, leading to a simplified hardware implementation
- Why we can come up with some many don't care?

ALUOp		Function code						Operation	
ALUOp1	ALUOp0	F5	F4	F3	F2	F1	F0		
0	0	X	X	X	X	X	X	0010	lw, sw
X	1	X	X	X	X	X	X	0110	beq
1	X	X	X	0	0	0	0	0010	R-type Instr.
1	X	X	X	0	0	1	0	0110	
1	X	X	X	0	1	0	0	0000	
1	X	X	X	0	1	0	1	0001	
1	X	X	X	1	0	1	0	0111	

THE HONG KONG UNIVERSITY OF SCIENCE AND TECHNOLOGY

Hardware Implementation of ALU Control Block

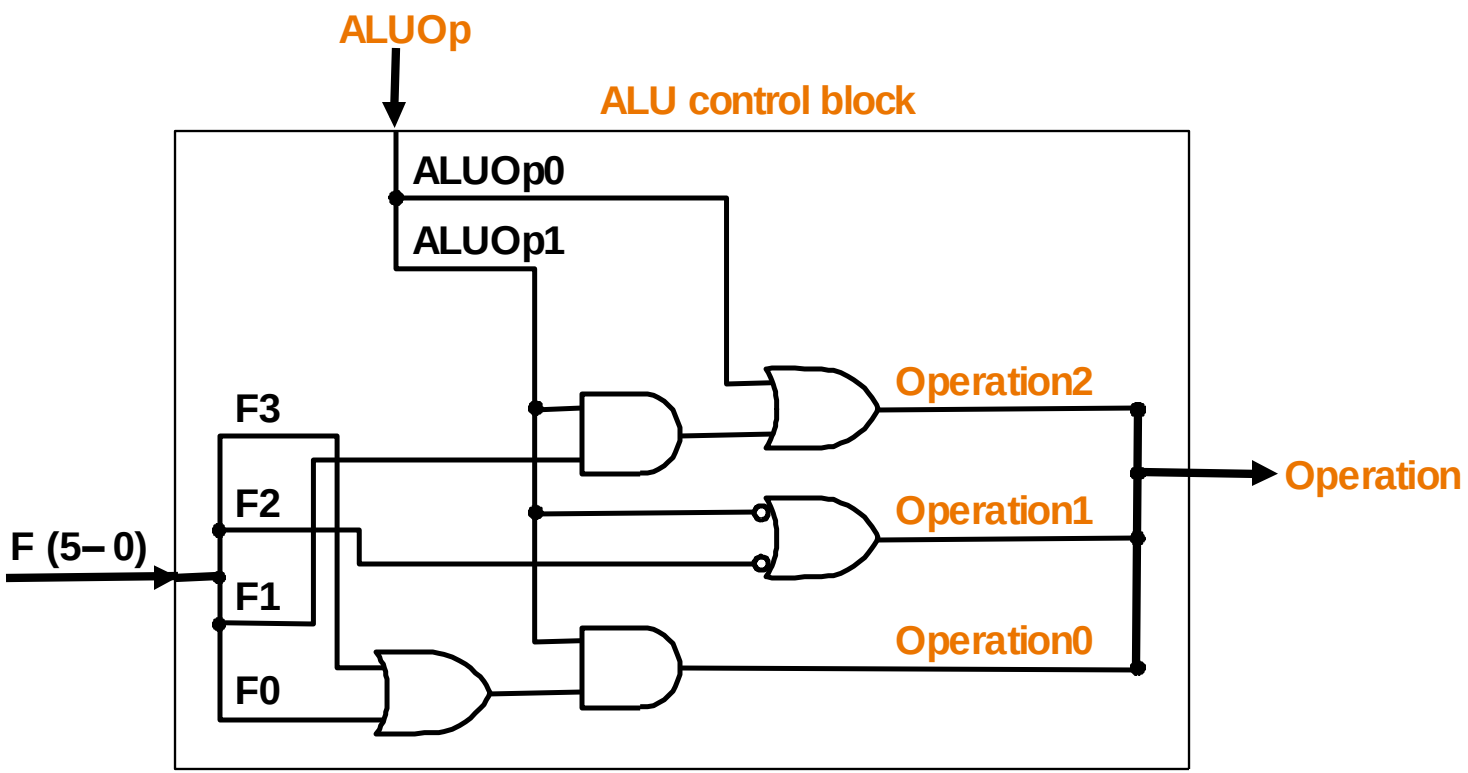

Next: the Main Control Unit

- Different instructions desire different operations in datapath
- Proper control signals in datapath make this happen
- Control signals are derived from instruction

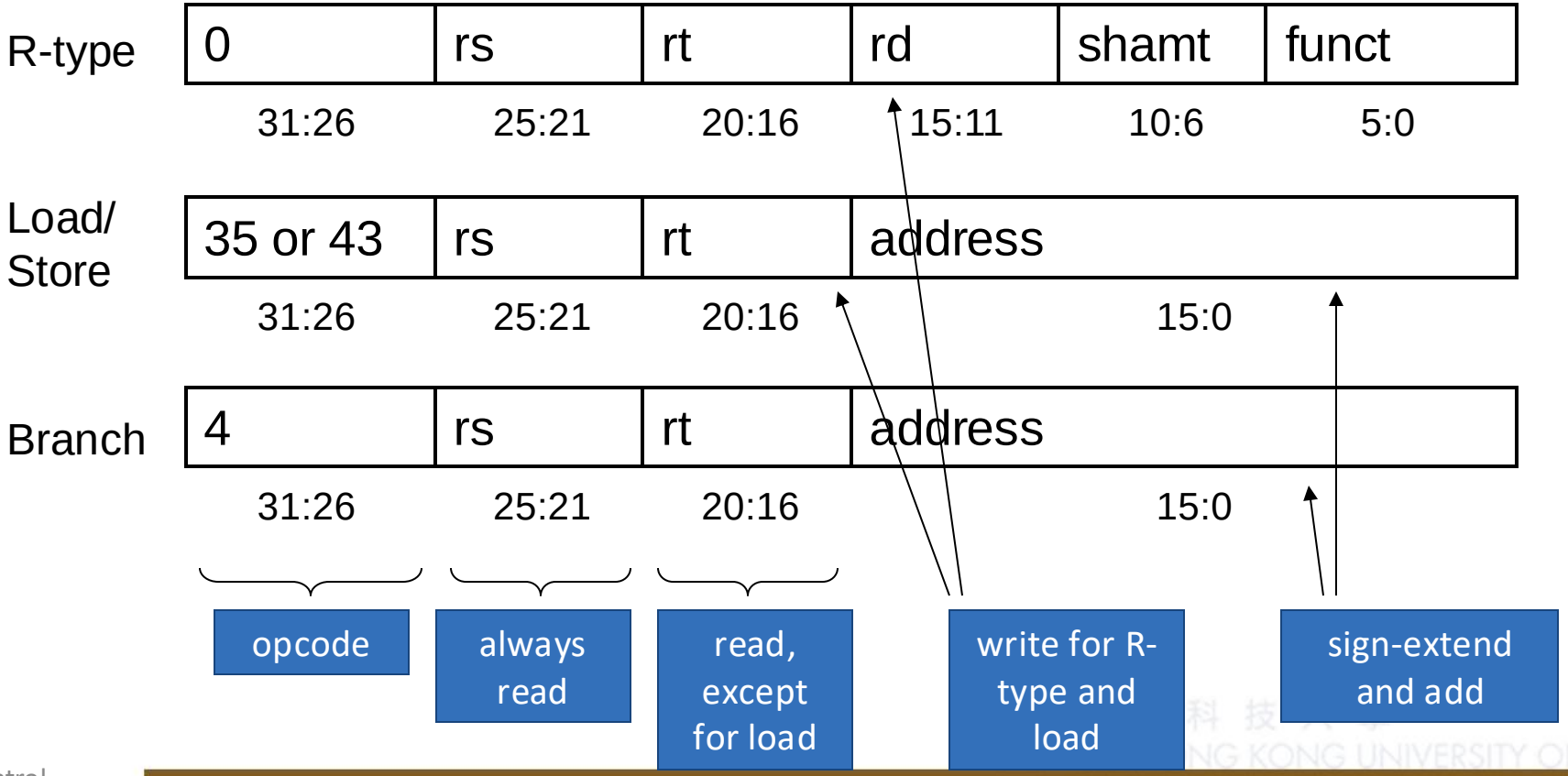

Control Signals in Single-cycle Implementation

Signal name	Effect when deasserted	Effect when asserted
RegDst	The register destination number for the Write register comes from **rt** field (bits 20-16)	The register destination number for the Write register comes from **rd** field (bits 15-11)
RegWrite	None	Enable data write to the register specified by the register destination number
ALUSrc	The second ALU operand comes from the second register file output (Read data port 2).	The second ALU operand is the sign-extended, lower 16 bits of the instruction
PCSrc	The next PC picks up the output of the adder that computes PC+4	The next PC picks up the output of the adder that computes the branch target
MemRead	None	Enable read from memory. Memory contents designated by the address are put on the Read data output
MemWrite	None	Enable write to memory. Overwrite the memory contents designated by the address with the value on the Write data input
MemtoReg	Feed the Write data input of the register file with output from ALU	Feed the Write data input of the register file with output from memory

THE HONG KONG UNIVERSITY OF SCIENCE AND TECHNOLOGY

Setting of Control Signals

- **The 9 control signals (7 from previous table + 2 from ALUOp) can be set based entirely on the 6-bit opcode, with the exception of PCSrc**

- **PCSrc control line is set if both conditions hold simultaneously:**
  a. Instruction is a branch, e.g. `beq`
  b. Zero output of ALU is true (i.e., two source operands are equal)

香港科技大學
THE HONG KONG UNIVERSITY OF SCIENCE AND TECHNOLOGY

R-Type Instr. with Control

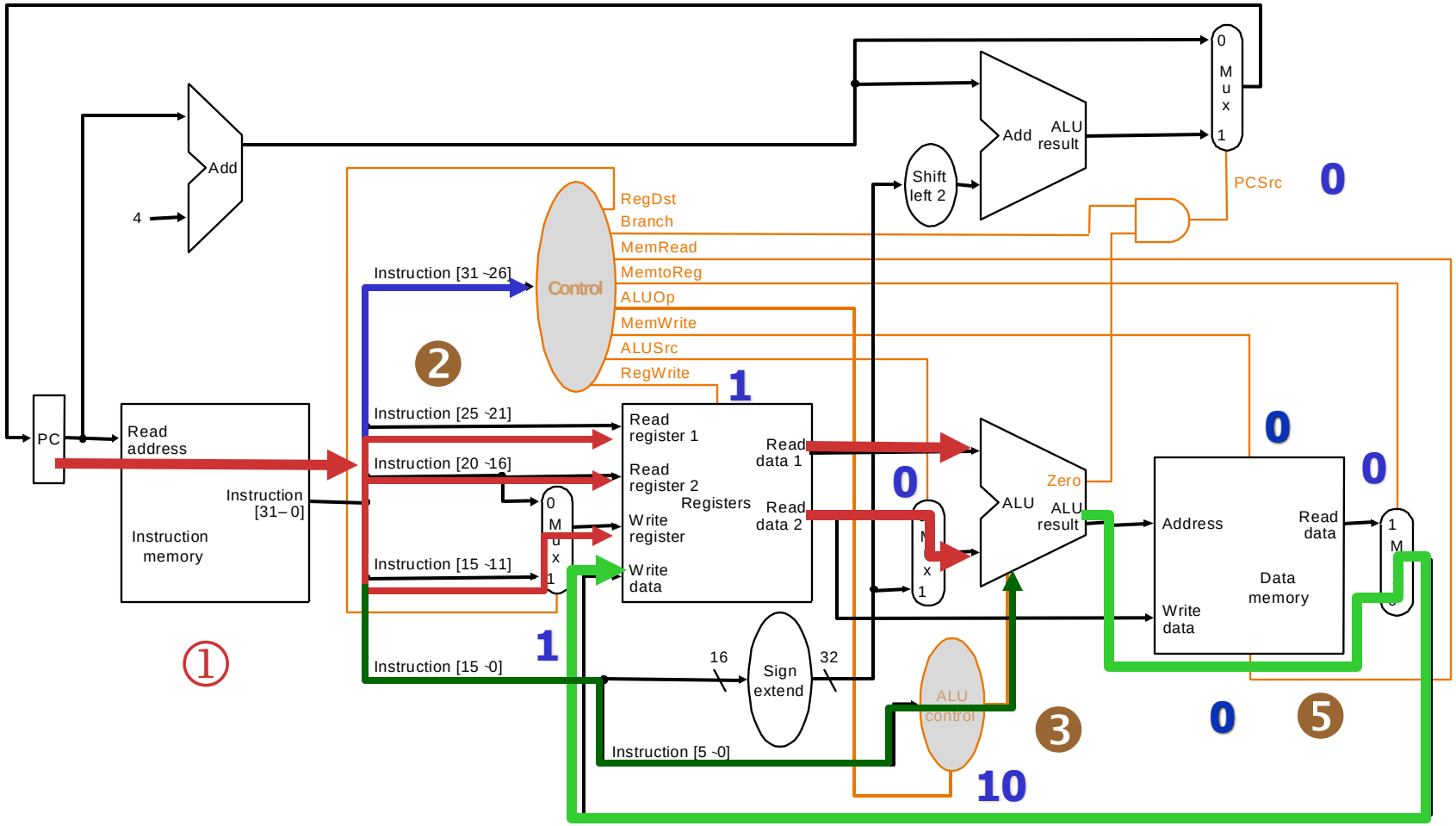

Load Instr. with Control

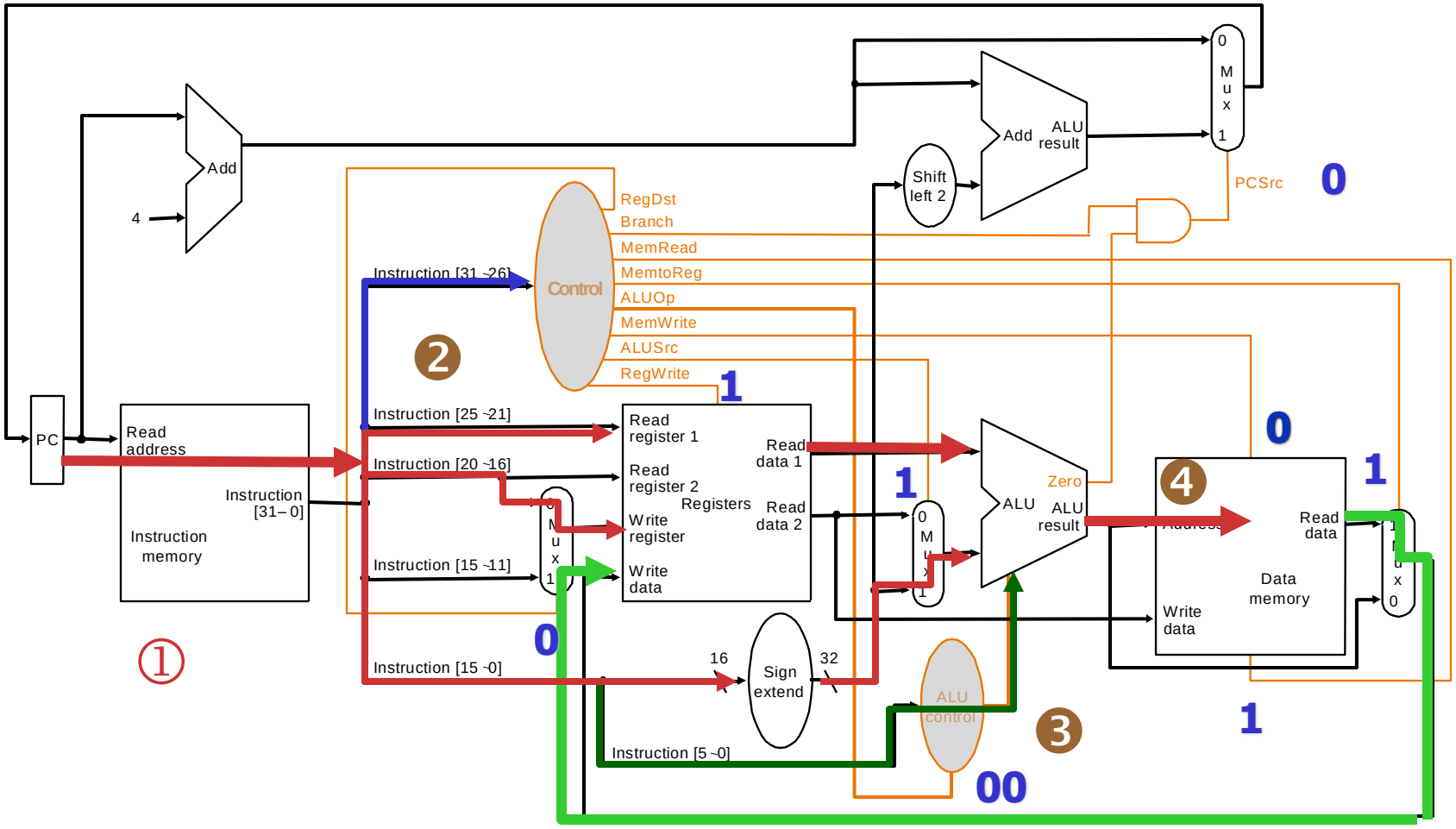

Branch-on-Equal Instr. with Control

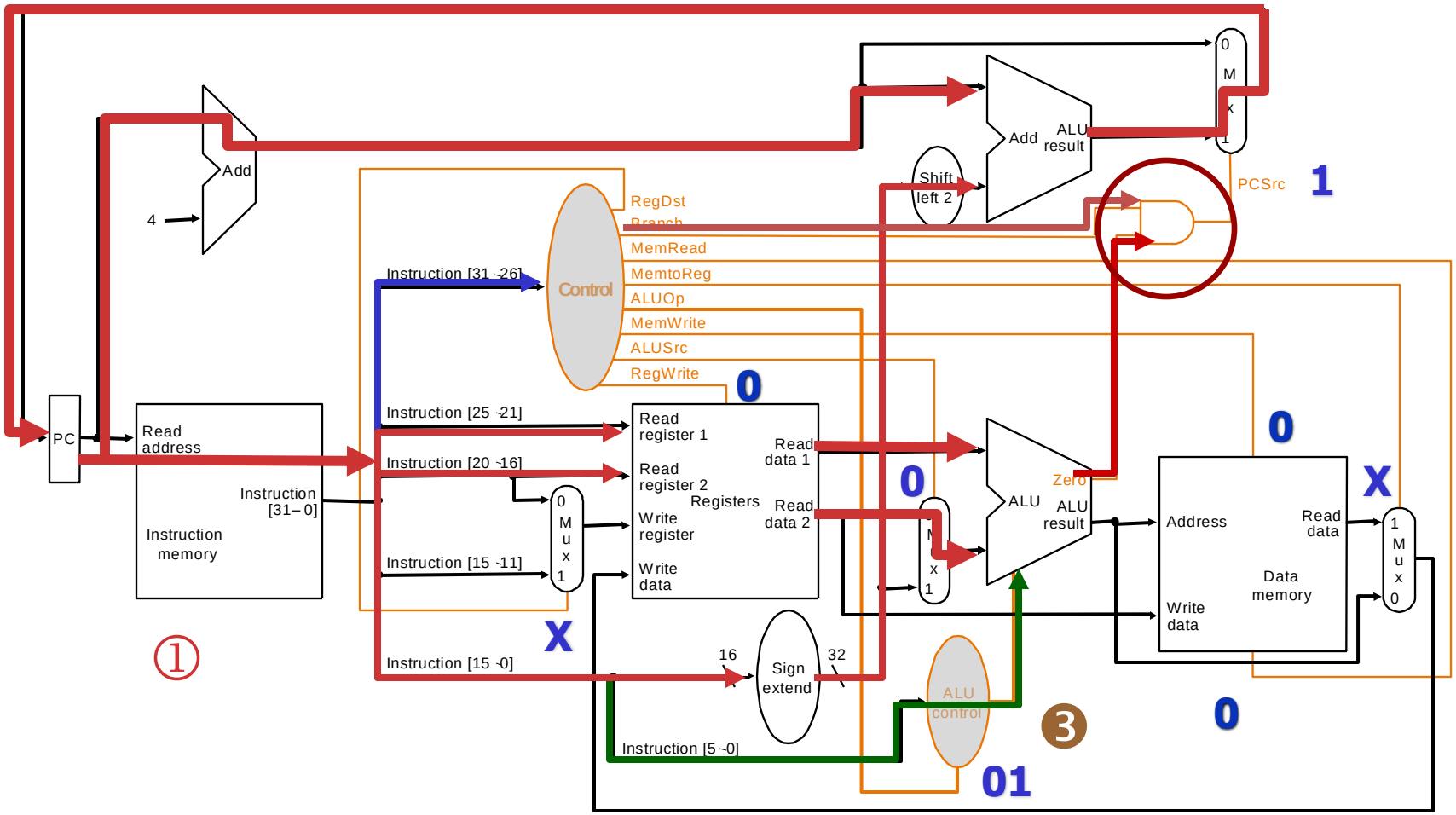

Setting of Control Signals (Cont'd)

- Setting of control lines (output of control unit):

Instruction	Reg-Dst	ALU-Src	Mem-toReg	Reg-Write	Mem-Read	Mem-Write	Branch	ALUOp1	ALUOp0
R-format	1	0	0	1	0	0	0	1	0
`lw`	0	1	1	1	1	0	0	0	0
`sw`	X	1	X	0	0	1	0	0	0
`beq`	X	0	X	0	0	0	1	0	1

`sw` & `beq` will not modify any register, it is ensured by making RegWrite to 0
So, we don't care what write register & write data are

- Input to control unit (i.e. opcode determines setting of control lines):

Instruction	Opcode in decimal	Opcode in binary					
		Op5	Op4	Op3	Op2	Op1	Op0
R-format	0	0	0	0	0	0	0
`lw`	35	1	0	0	0	1	1
`sw`	43	1	0	1	0	1	1
`beq`	4	0	0	0	1	0	0

香港科技大學
THE HONG KONG UNIVERSITY OF SCIENCE AND TECHNOLOGY

Implementing Datapath Control Unit

- Start with truth table

Input or output	Signal name	R-format	lw	sw	beq
Inputs	Op5	0	1	1	0
	Op4	0	0	0	0
	Op3	0	0	1	0
	Op2	0	0	0	1
	Op1	0	1	1	0
	Op0	0	1	1	0
Outputs	RegDst	1	0	X	X
	ALUSrc	0	1	1	0
	MemtoReg	0	1	X	X
	RegWrite	1	1	0	0
	MemRead	0	1	0	0
	MemWrite	0	0	1	0
	Branch	0	0	0	1
	ALUOp1	1	0	0	0
	ALUOp0	0	0	0	1

Hardware Implementation of Datapath Control Unit

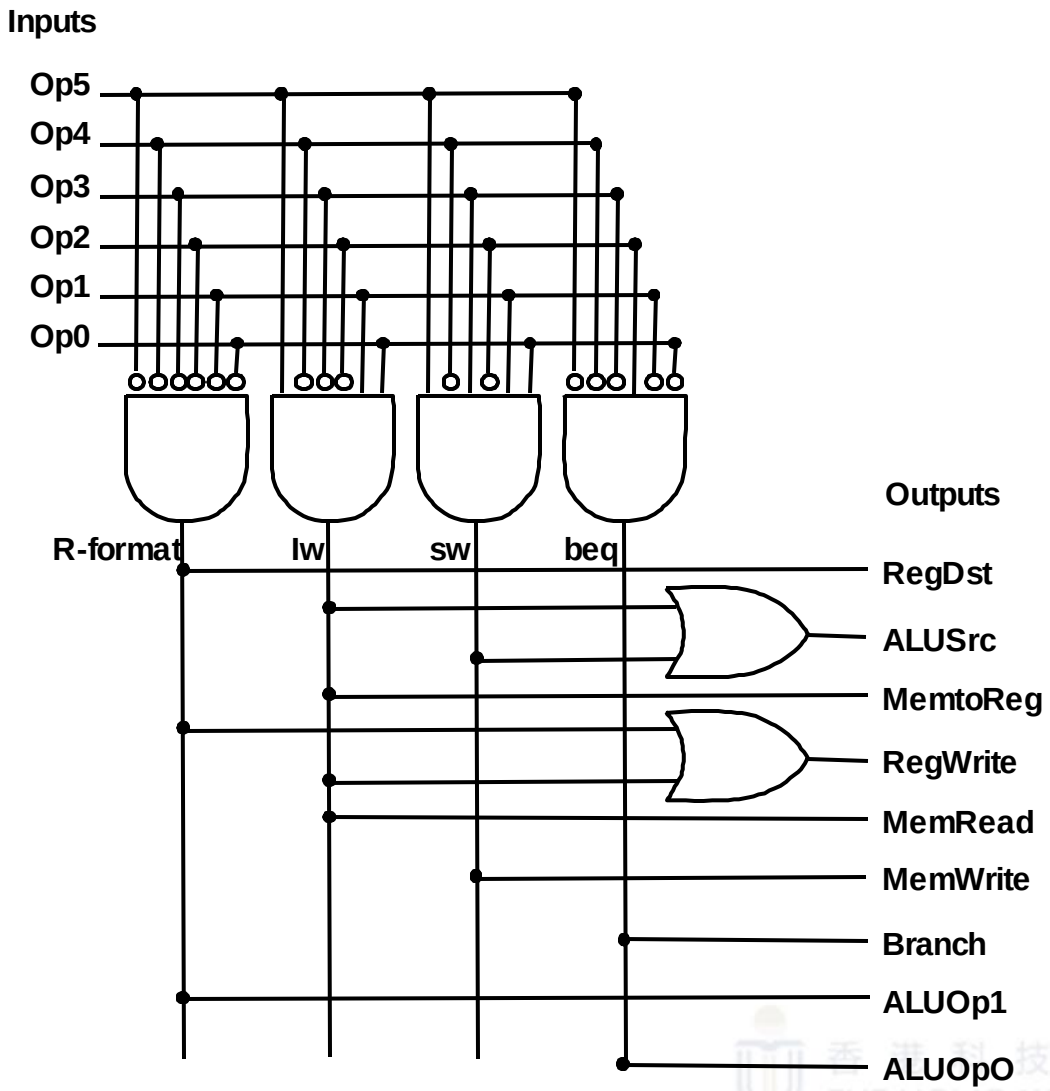

Implementing Jumps

Jump	2	address
	31:26	25:0

- **Jump uses word address**
- **Update PC with concatenation of**
  - Top 4 bits of old PC
  - 26-bit jump address
  - 00
- **Need an extra control signal decoded from opcode**

香港科技大學
THE HONG KONG UNIVERSITY OF SCIENCE AND TECHNOLOGY

Extend Datapath & Control to Handle Jump Instr.

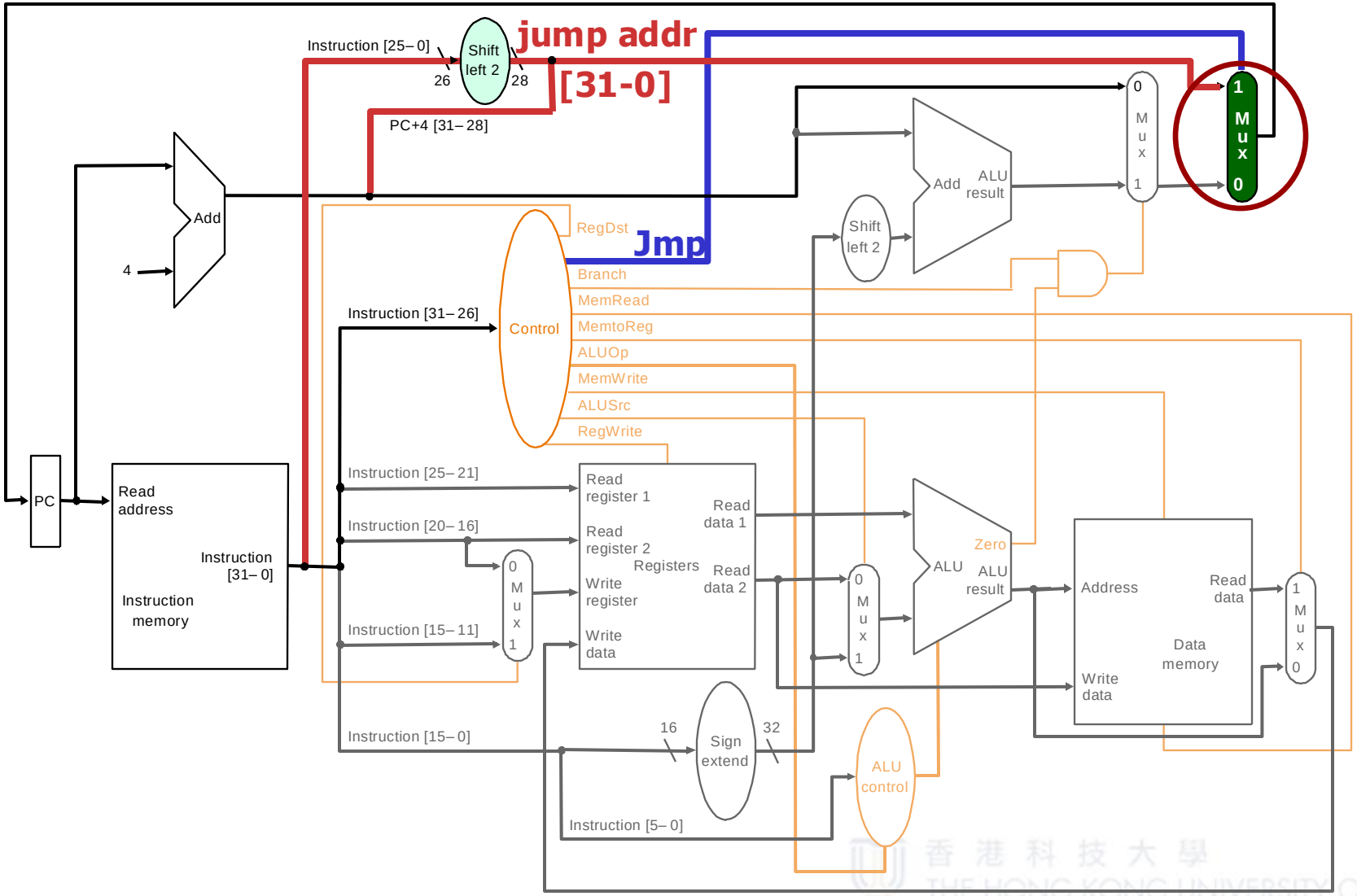

Performance Issues

Single-cycle implementation can't run very fast

- **Longest delay determines clock period**
  - Critical path: load instruction
  - Instruction memory → register file → ALU → data memory → register file
- **Not feasible to vary period for different instructions**
- **Violates design principle**
  - Making the common case fast
- **We will improve performance by pipelining**

香港科技大學
THE HONG KONG UNIVERSITY OF SCIENCE AND TECHNOLOGY