COMP2611 COMPUTER ORGANIZATION
TOPIC 2 INTRODUCTION TO DIGITAL LOGIC

Content

- **This topic explains (conceptually):**
  - How are bits represented and handled in the hardware?
  - How to design a simple circuit to perform an abstract task (e.g. addition)?

香港科技大學
THE HONG KONG UNIVERSITY OF SCIENCE AND TECHNOLOGY

Power of Bit

- **Analog vs. Digital waveforms**
  - Digital: only assumes discrete values
  - Analog: values vary over a broad range continuously

Analog Signal Digital Signal

- **The electronics inside modern computers are digital: they operate with only two voltage levels of interest**
- **Typical voltage assignment**

  - Binary 1: any voltage between 2.4V to 2.9V
  - Binary 0: any voltage between 0V to 0.5V

香港科技大學
THE HONG KONG UNIVERSITY OF SCIENCE AND TECHNOLOGY

Bit in Computer

- **Bits** are the basis for **binary number representation** in digital computers
- Operations in computer work on bits

- **Combining bits** into patterns **following some conventions or rules (defined in the ISA)** allow for:
  - Number representations
    - Integers,
    - Fractions and Real numbers, …
  - Instruction encoding
    - Operation
    - Operands

香港科技大學
THE HONG KONG UNIVERSITY OF SCIENCE AND TECHNOLOGY

Lamp Example

- Example: lamp with switch

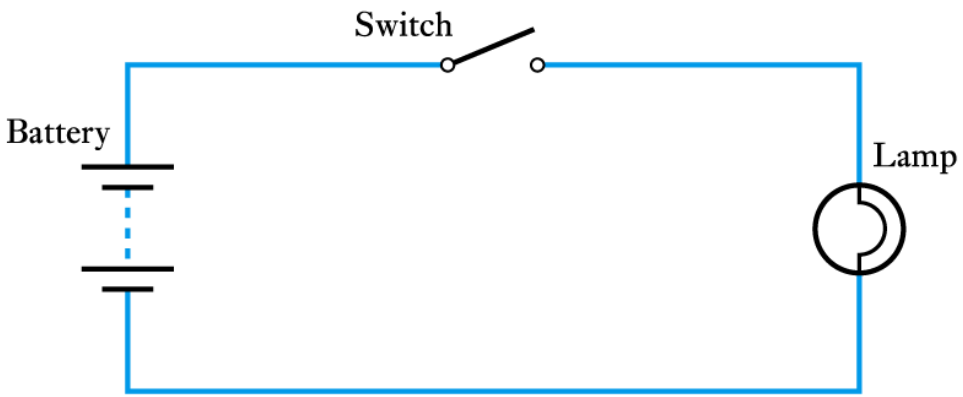

S	*L*
OPEN	OFF
CLOSED	ON

S	*L*
0	0
1	1

Lamp truth table

香港科技大學
THE HONG KONG UNIVERSITY OF SCIENCE AND TECHNOLOGY

Lamp Example (cont.)

- Two switches in series

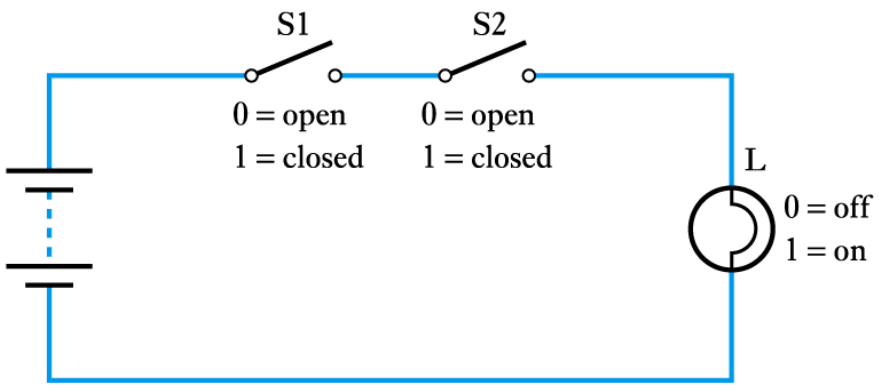

(a) Circuit

S1	S2	L
0	0	0
0	1	0
1	0	0
1	1	1

(b) Truth table

- Two switches in parallel

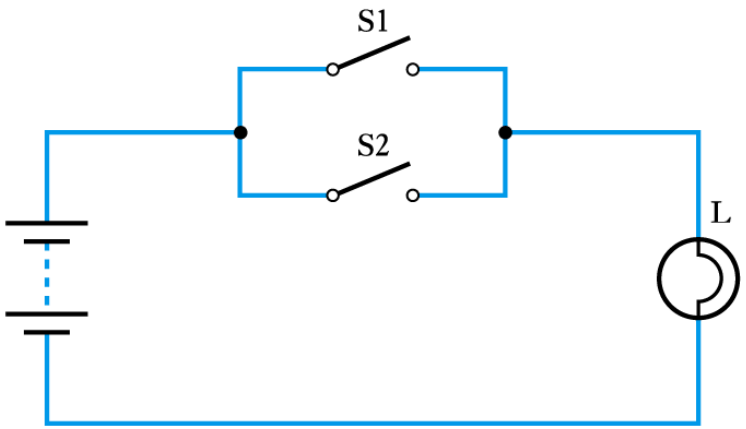

(a) Circuit

S1	S2	L
0	0	0
0	1	1
1	0	1
1	1	1

(b) Truth table

香港科技大學
THE HONG KONG UNIVERSITY OF SCIENCE AND TECHNOLOGY

Truth Table

- A mathematical table used in logic
- In connection with Boolean algebra, Boolean functions
- Shows how the truth or falsity of a proposition (output) varies with that of its components (inputs)

- One column for each input variable and each output variable
- Each row of the truth table contains one possible configuration of the input variables

香港科技大學
THE HONG KONG UNIVERSITY OF SCIENCE AND TECHNOLOGY

Boolean Algebra and Logic Operation

- Everything in digital computer is binary, the theoretical model works behind is Boolean algebra
- Algebra: values, variables, operations
- In Boolean algebra
  - The values are the symbols 0 (or FALSE) and 1 (or TRUE)
  - A Boolean variable (or Binary variable) is one that can take only 2 values, 0 or 1
  - Three fundamental logic operations on Boolean variables: AND, OR, NOT
  - Other commonly used logic operations: NAND, NOR, XOR
  - Logic gates implement the above logic operations and built up by transistors

香港科技大學
THE HONG KONG UNIVERSITY OF SCIENCE AND TECHNOLOGY

NOT Operation and NOT Gate

- **The NOT gate (or inverter)**

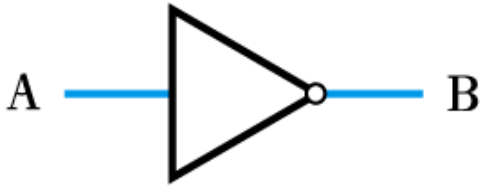

(a) Circuit symbol

A	B
0	1
1	0

(b) Truth table

$$B = \overline{A}$$

(c) Boolean expression

AND Operation and AND Gate

The AND gate

(a) Circuit symbol

A	B	C
0	0	0
0	1	0
1	0	0
1	1	1

(b) Truth table

$$C = A \cdot B$$

(c) Boolean expression

香港科技大學
THE HONG KONG UNIVERSITY OF SCIENCE AND TECHNOLOGY

OR Operation and OR Gate

The OR gate

(a) Circuit symbol

A	B	C
0	0	0
0	1	1
1	0	1
1	1	1

(b) Truth table

$$C = A + B$$

(c) Boolean expression

香港科技大學
THE HONG KONG UNIVERSITY OF SCIENCE AND TECHNOLOGY

NAND Operation and NAND Gate

The NAND gate

(a) Circuit symbol

A	B	C
0	0	1
0	1	1
1	0	1
1	1	0

(b) Truth table

$$C = \overline{A \cdot B}$$

(c) Boolean expression

香港科技大學
THE HONG KONG UNIVERSITY OF SCIENCE AND TECHNOLOGY

NOR Operation and NOR Gate

The NOR gate

(a) Circuit symbol

A	B	C
0	0	1
0	1	0
1	0	0
1	1	0

(b) Truth table

$$C = \overline{A + B}$$

(c) Boolean expression

Exclusive-OR Operation and Exclusive-OR Gate

The Exclusive OR (XOR) gate

(a) Circuit symbol

A	B	C
0	0	0
0	1	1
1	0	1
1	1	0

(b) Truth table

$$C = A \oplus B$$

(c) Boolean expression

香港科技大學
THE HONG KONG UNIVERSITY OF SCIENCE AND TECHNOLOGY

Logic Function

- Any operation in digital circuit can be described by truth table or logic function
- A logic function is a function on binary variables whose output is also a binary variable
- *Three fundamental* NOT, AND, OR logic operations are at the center of all operations in modern computers
- Logical functions can be expressed in several alternative ways:
  - Truth table
  - Logical expressions
  - Graphical form, e.g. K-map

香港科技大學
THE HONG KONG UNIVERSITY OF SCIENCE AND TECHNOLOGY

Digital Logic Circuit Example

- A circuit with two inputs (A, B) and two outputs (S, C)
- The circuit executes as follows
  - S is true if exactly one input is true;
  - C is true if both two inputs are true.

- Describe the behaviour of the circuit with truth table and logic function
- Build the circuit with logic gates
- What is this circuit for?

香港科技大學
THE HONG KONG UNIVERSITY OF SCIENCE AND TECHNOLOGY

Digital Logic Circuit Example (cont.)

- The circuit is a **1-bit half adder**

A	B	C	S
0	0	0	0
0	1	0	1
1	0	0	1
1	1	1	0

Truth Table

$$S = A \oplus B = A \cdot \overline{B} + \overline{A} \cdot B$$

$$C = A \cdot B$$

Logic Function

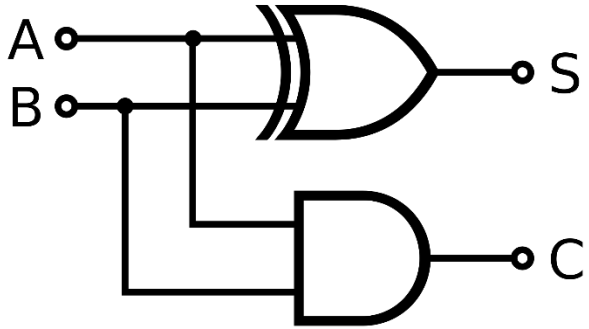

Circuit Implementation

Computer Arithmetic and Logic operation can be specified via logic functions

香港科技大學
THE HONG KONG UNIVERSITY OF SCIENCE AND TECHNOLOGY

Digital Logic Circuit

- **Two types of digital logic circuits inside a computer:**
  - **Combinational logic circuits**
    - Logic circuits that do not have memory
    - The output depends only on the current inputs and the circuit
    - They can be specified fully with a truth table or a logic equation
  - **Sequential logic circuits**
    - Logic circuits that have memory
    - The output depends on both the current inputs and the value stored in memory (called state)

香港科技大學
THE HONG KONG UNIVERSITY OF SCIENCE AND TECHNOLOGY

COMBINATIONAL LOGIC

Simple Combinational Logic Circuits

- **Multiplexor/ De-multiplexor**
- **Decoder/Encoder**
- **Two-level logic and Programmable Logic Array (PLA)**

- The above circuits can be implemented using AND, OR, and NOT gates only
- They are higher-level basic building blocks that are commonly seen in combinational logic

香港科技大學
THE HONG KONG UNIVERSITY OF SCIENCE AND TECHNOLOGY

Multiplexor

- A multiplexor (or selector) selects one of the data inputs as output by a control input value
  - Example: 4-to-1 multiplexor

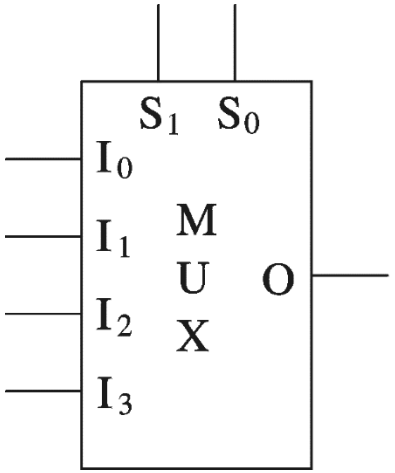

S_1	S_0	O
0	0	I_0
0	1	I_1
1	0	I_2
1	1	I_3

- For a 2^n-to-1 multiplexor
  - 2^n data inputs
  - n selection inputs
  - a single output

香港科技大學
THE HONG KONG UNIVERSITY OF SCIENCE AND TECHNOLOGY

4-to-1 MUX Implementation

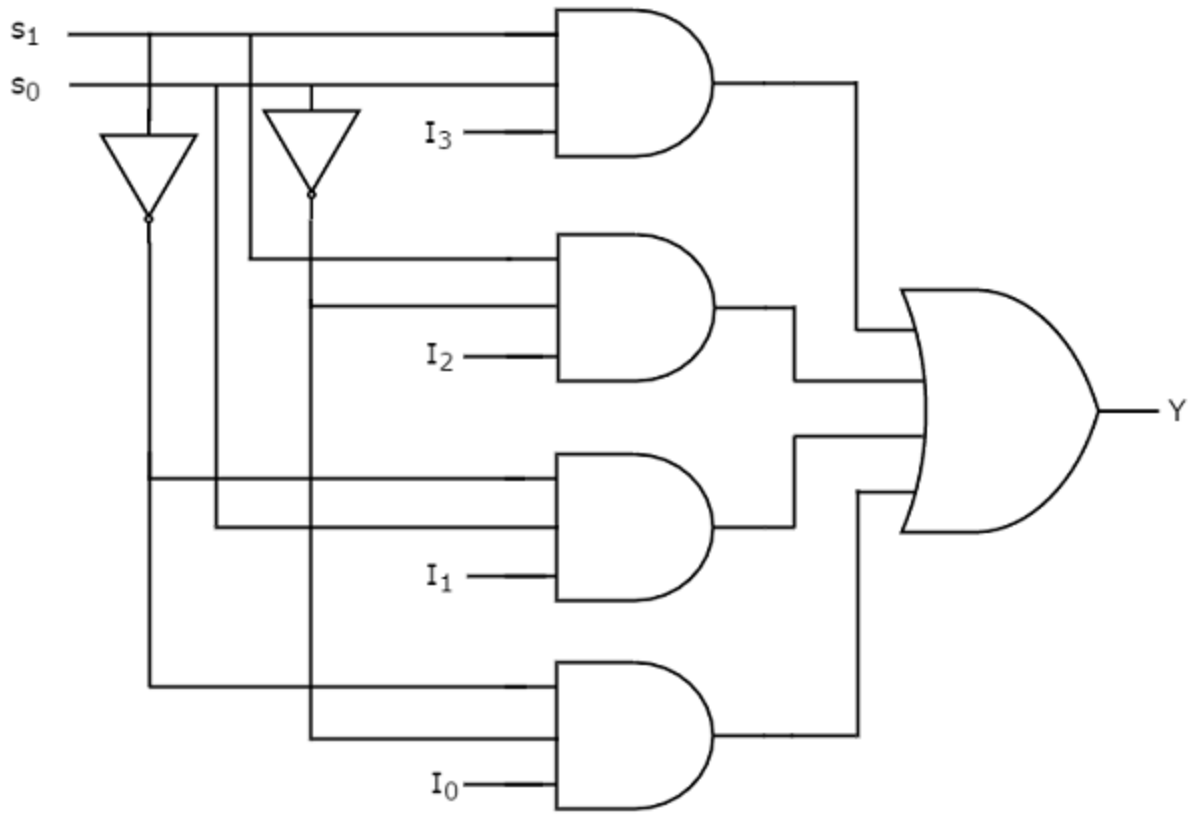

- How to implement a higher order MUX, e.g. 8-to-1?

香港科技大學
THE HONG KONG UNIVERSITY OF SCIENCE AND TECHNOLOGY

Decoder

- A decoder (N-to-2^N decoder) is a logical block with an N-bit input and 2^N 1-bit outputs

I_1	I_0	O_3	O_2	O_1	O_0
0	0	0	0	0	1
0	1	0	0	1	0
1	0	0	1	0	0
1	1	1	0	0	0

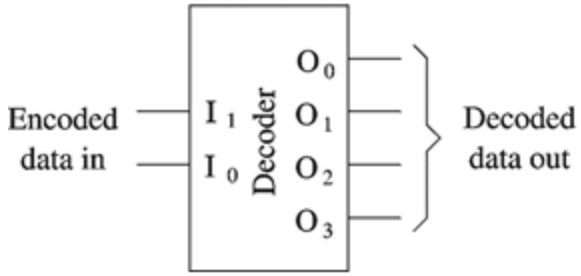

- The output corresponds to the input bit pattern is true while all other outputs are false.

- Example: 2-to-4 decoder

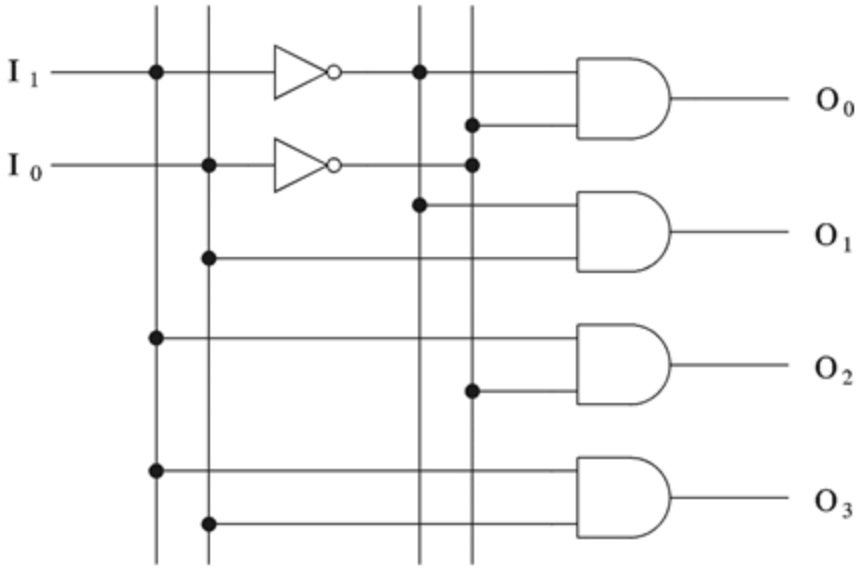

香港科技大學
THE HONG KONG UNIVERSITY OF SCIENCE AND TECHNOLOGY

Logic Circuit Design Process

- **A simple logic design process involves**
  - Problem specification
  - Truth table derivation
  - Derivation of logical expression
  - Simplification of logical expression
  - Implementation

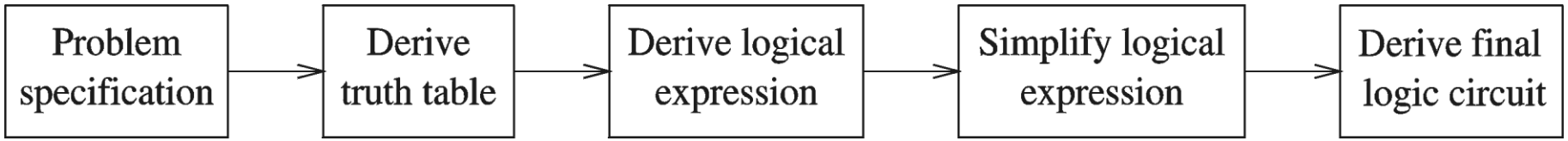

香港科技大學
THE HONG KONG UNIVERSITY OF SCIENCE AND TECHNOLOGY

Example: 3-person Majority Vote

- Problem: 3 person vote for a motion, if 2 or more says YES, the motion is approved

- Step 1: truth table
- Step 2: derive the logic function according to the truth table

Inputs			Output
X	Y	Z	D
0	0	0	0
0	0	1	0
0	1	0	0
0	1	1	1
1	0	0	0
1	0	1	1
1	1	0	1
1	1	1	1

香港科技大學
THE HONG KONG UNIVERSITY OF SCIENCE AND TECHNOLOGY

minterm vs. maxterm

- **minterm**, denoted as m_i, where $0 \leq i \leq 2^n - 1$, is the product (AND) of n Boolean variables in its original or negated form

- **maxterm**, denoted as M_i, where $0 \leq i \leq 2^n - 1$, is the sum (OR) of n Boolean variables in its original or negated form

Variable			Minterm		Maxterm	
x	y	z	Term	Designation	Term	Designation
0	0	0	x'y'z'	m_0	x+y+z	M_0
0	0	1	x'y'z	m_1	x+y+z'	M_1
0	1	0	x'yz'	m_2	x+y'+z	M_2
0	1	1	x'yz	m_3	x+y'+z'	M_3
1	0	0	xy'z'	m_4	x'+y+z	M_4
1	0	1	xy'z	m_5	x'+y+z'	M_5
1	1	0	xyz'	m_6	x'+y'+z	M_6
1	1	1	xyz	m_7	x'+y'+z'	M_7

香港科技大學
THE HONG KONG UNIVERSITY OF SCIENCE AND TECHNOLOGY

Canonical Forms

- Any Boolean function can be expressed as
  - a sum (OR) of its 1-minterms, or
  - a product (AND) of its 0-maxterms

- Any Boolean function that is expressed as a sum of minterms or as a product of maxterms is said to be in its canonical form

- Example: Canonical form of majority vote

Inputs			Output
A	B	C	D
0	0	0	0
0	0	1	0
0	1	0	0
0	1	1	1
1	0	0	0
1	0	1	1
1	1	0	1
1	1	1	1

$$\begin{aligned} \mathrm{D} &= m_3 + m_5 + m_6 + m_7 \\ &= \bar{\mathrm{A}}\mathrm{BC} + \mathrm{A}\bar{\mathrm{B}}\mathrm{C} + \mathrm{AB}\bar{\mathrm{C}} + \mathrm{ABC} \end{aligned}$$

$$\begin{aligned} \mathrm{D} &= M_0 M_1 M_2 M_4 \\ &= (A + \mathrm{B} + \mathrm{C})(A + \mathrm{B} + \bar{\mathrm{C}})(\mathrm{A} + \bar{\mathrm{B}} \\ &\quad + \mathrm{C})(\bar{A} + \mathrm{B} + \mathrm{C}) \end{aligned}$$

香港科技大學
THE HONG KONG UNIVERSITY OF SCIENCE AND TECHNOLOGY

Two-Level Logic

- ***Any*** **logic function can be expressed in a canonical form as a two-level representation:**
  - Every input is either a variable or its negated form.
  - One level consists of **AND** gates only.
  - The other level consists of **OR** gates only.

- **Sum-of-products (SOP) form:**
  - E.g., $E = (A \cdot B \cdot \overline{C}) + (A \cdot C \cdot \overline{B}) + (B \cdot C \cdot \overline{A})$
  - More commonly used than product-of-sums representation.

- **Product-of-sums (POS) form:**
  - E.g., $E = (\overline{A} + \overline{B} + C) \cdot (\overline{A} + \overline{C} + B) \cdot (\overline{B} + \overline{C} + A)$

- **Logic function with only AND, OR, NOT can express all possible truth tables**

香港科技大學
THE HONG KONG UNIVERSITY OF SCIENCE AND TECHNOLOGY

Programmable Logic Array

- A programmable logic array (PLA) is a gate-level *implementation* of the two-level representation for any set of logic functions, which corresponds to a truth table with multiple output columns.
- Example: A PLA corresponds to the sum-of-products representation

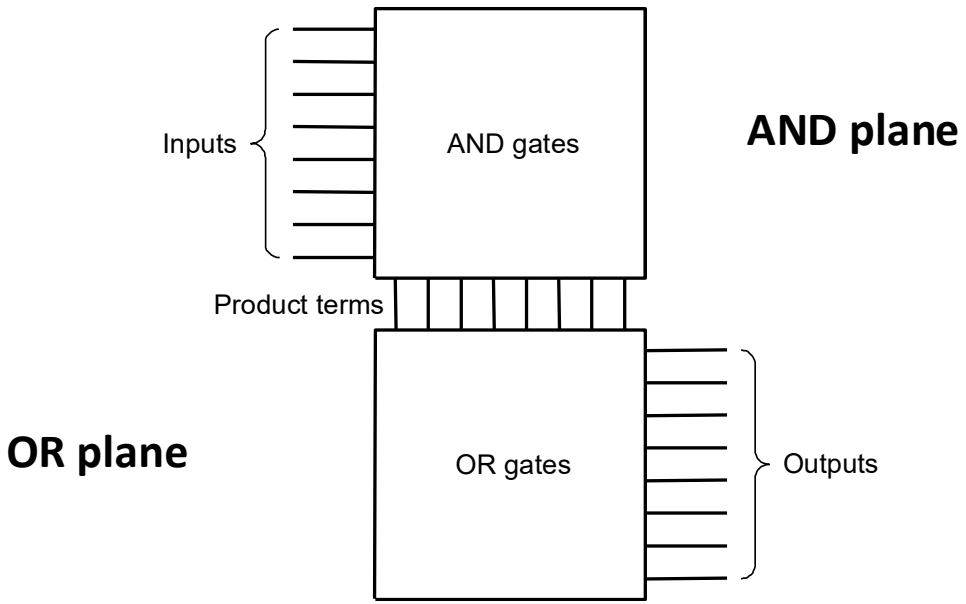

PLA Example

- Show a PLA implementation of this example:

Inputs			Outputs		
A	B	C	D	E	F
0	0	0	0	0	0
0	0	1	1	0	0
0	1	0	1	0	0
0	1	1	1	1	0
1	0	0	1	0	0
1	0	1	1	1	0
1	1	0	1	1	0
1	1	1	1	0	1

- Sum-of-product representation

$$D = \overline{A}\cdot\overline{B}\cdot C + \overline{A}\cdot B\cdot\overline{C} + \overline{A}\cdot B\cdot C + A\cdot\overline{B}\cdot\overline{C} + A\cdot\overline{B}\cdot C + A\cdot B\cdot\overline{C} + A\cdot B\cdot C$$

$$E = \overline{A}\cdot B\cdot C + A\cdot\overline{B}\cdot C + A\cdot B\cdot\overline{C}$$

$$F = A\cdot B\cdot C$$

香港科技大學
THE HONG KONG UNIVERSITY OF SCIENCE AND TECHNOLOGY

PLA Example (cont.)

- 3 inputs -> 3 rows in the AND plane
- 7 unique product terms with at least one TRUE value in the output -> 7 columns in the AND plane.
- 3 outputs -> 3 rows in the OR plane

Inputs			Outputs		
A	B	C	D	E	F
0	0	0	0	0	0
0	0	1	1	0	0
0	1	0	1	0	0
0	1	1	1	1	0
1	0	0	1	0	0
1	0	1	1	1	0
1	1	0	1	1	0
1	1	1	1	0	1

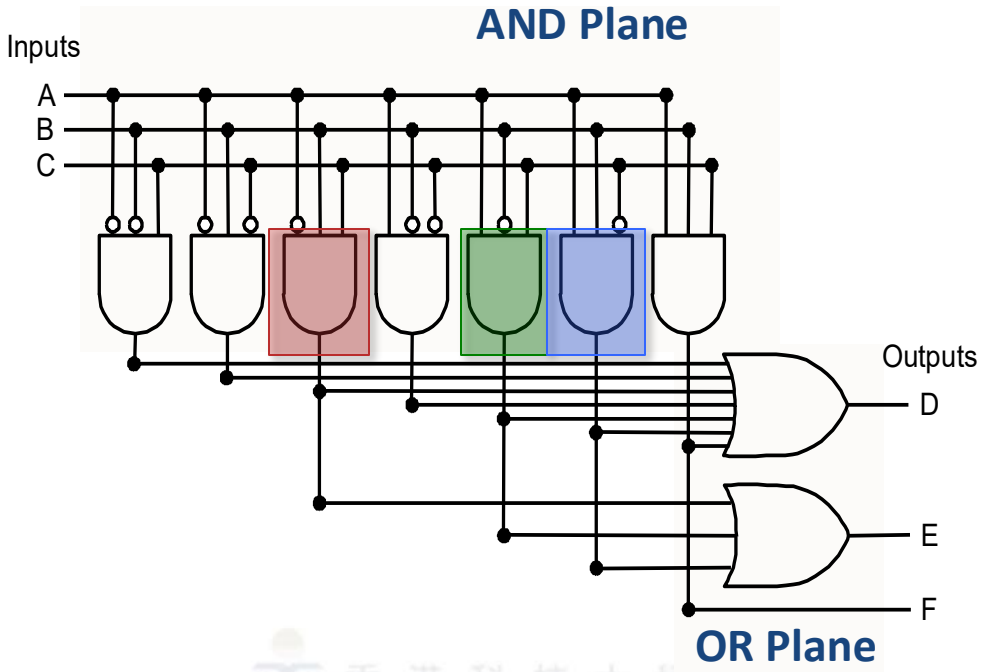

PLA Example (cont.)

$$D = \overline{A}\cdot\overline{B}\cdot C + \overline{A}\cdot B\cdot\overline{C} + \overline{A}\cdot B\cdot C + A\cdot\overline{B}\cdot\overline{C} + A\cdot\overline{B}\cdot C + A\cdot B\cdot\overline{C} + A\cdot B\cdot C$$

$$E = \overline{A}\cdot B\cdot C + A\cdot\overline{B}\cdot C + A\cdot B\cdot\overline{C}$$

$$F = A\cdot B\cdot C$$

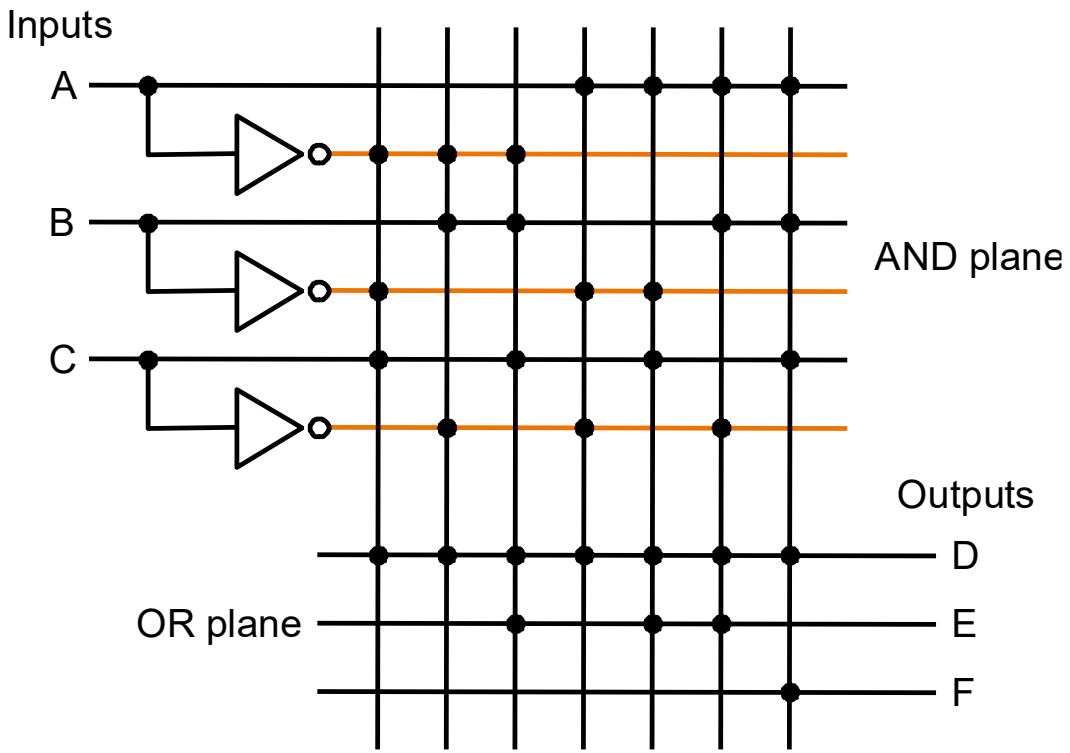

An equivalent PLA representation

香港科技大學
THE HONG KONG UNIVERSITY OF SCIENCE AND TECHNOLOGY

PLA Example (cont.)

$$\overline{A}\cdot B\cdot C$$

$$D=\overline{A}\cdot\overline{B}\cdot C+\overline{A}\cdot B\cdot\overline{C}+\overline{A}\cdot B\cdot C+A\cdot\overline{B}\cdot\overline{C}+A\cdot\overline{B}\cdot C+A\cdot B\cdot\overline{C}+A\cdot B\cdot C$$

$$E=\overline{A}\cdot B\cdot C+A\cdot\overline{B}\cdot C+A\cdot B\cdot\overline{C}$$

$$F=A\cdot B\cdot C$$

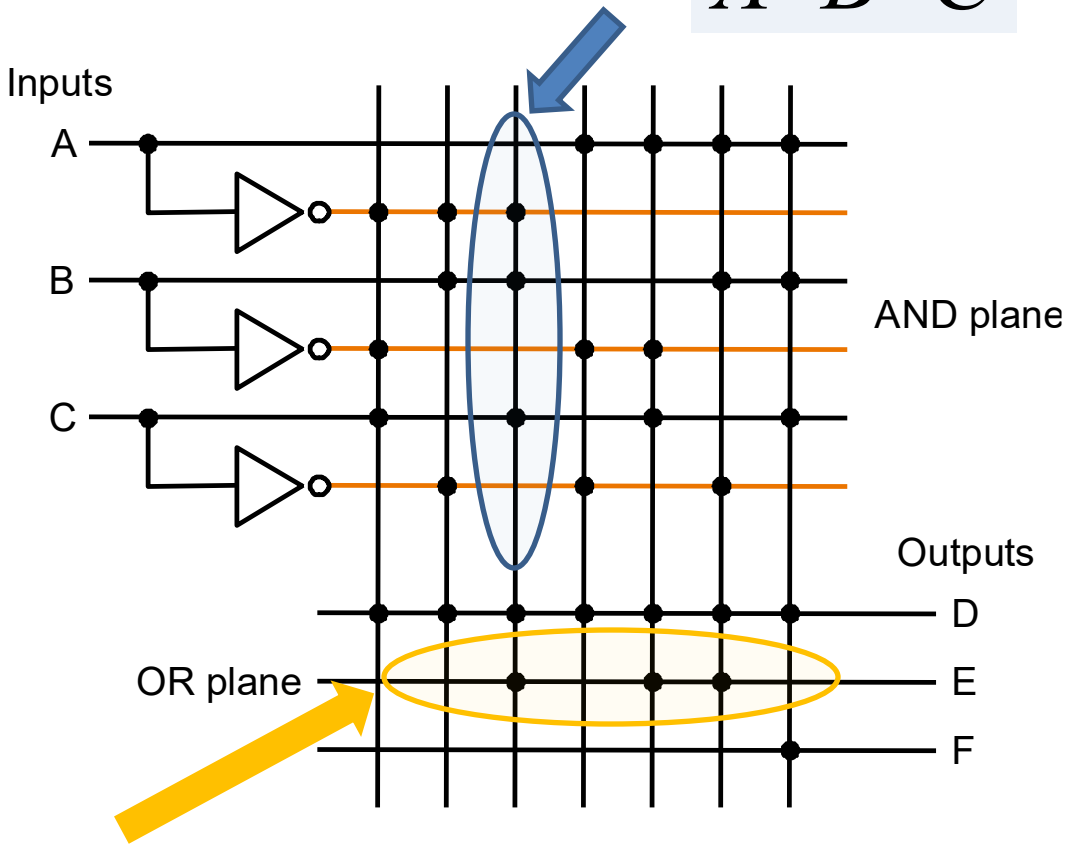

$$\overline{A}\cdot B\cdot C+A\cdot\overline{B}\cdot C+A\cdot B\cdot\overline{C}$$

香港科技大學
THE HONG KONG UNIVERSITY OF SCIENCE AND TECHNOLOGY

Logical Equivalence

- **Are the two circuits below doing the same thing?**

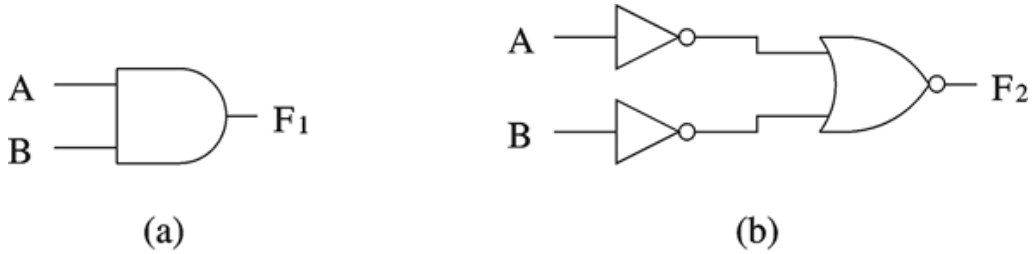

- **Proving logical equivalence of two circuits**
  - Derive the logical expression for the output of each circuit
  - Show that these two expressions are equivalent

- **Method 1: truth table**
  - For every combination of inputs, if both expressions yield the same output, they are equivalent
  - Good for logical expressions with small number of variables
- **Method 2: algebraic manipulation**
  - With help of Boolean Algebra (introduced later in circuit simplification)

香港科技大學
THE HONG KONG UNIVERSITY OF SCIENCE AND TECHNOLOGY

Example: Logic Equivalence with Truth Table

- **Is the circuit logically equivalent to the AND gate?**

- **Derive logical expression from a circuit**
  - Trace from the input to output
  - Write down intermediate logical expressions along the path
- **work out the truth table**
- **Proving logical equivalence**

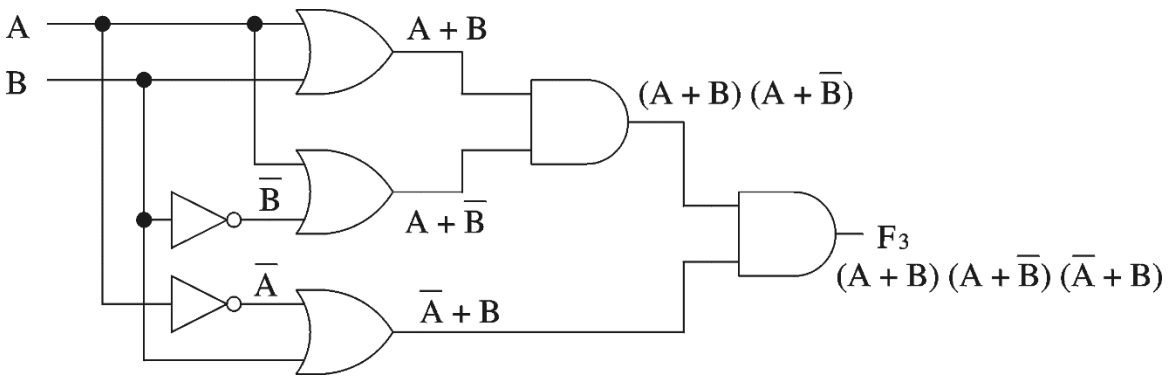

A	B	F = AB	F = (A + B)(A + $\overline{B}$)($\overline{A}$ + B)

香港科技大學
THE HONG KONG UNIVERSITY OF SCIENCE AND TECHNOLOGY

Logic Expression Simplification

- Truth tables can grow rapidly in size and become tedious.
  - N inputs means 2^n rows in truth table
- Logic expressions are better in this case, however, there are equivalent logic expressions for the same truth table, and each of them will lead to a circuit implementation
- Simplifying logic expressions leads to simpler and cheaper circuits (lesser components)

- There are many formal methods, algorithms and software for simplifying Boolean expressions
  - Boolean Algebra
  - Karnaugh-Maps (K-maps)

香港科技大學
THE HONG KONG UNIVERSITY OF SCIENCE AND TECHNOLOGY

Boolean Algebra Revisit

- Boolean Algebra is the algebra of logic that deals with the study of binary variables and logical operations
- It transform logical statements into mathematical symbols and calculate the truth or falsity of related statements by using rules

- Laws of Boolean Algebra are powerful tools to simplify logic equations

香港科技大學
THE HONG KONG UNIVERSITY OF SCIENCE AND TECHNOLOGY

Basic Laws of Boolean Algebra

Name	AND form	OR form
Identity law	$1A = A$	$0 + A = A$
Null law	$0A = 0$	$1 + A = 1$
Idempotent law	$AA = A$	$A + A = A$
Inverse law	$A\bar{A} = 0$	$A + \bar{A} = 1$
Commutative law	$AB = BA$	$A + B = B + A$
Associative law	$(AB)C = A(BC)$	$(A + B) + C = A + (B + C)$
Distributive law	$A + BC = (A + B)(A + C)$	$A(B + C) = AB + AC$
Absorption law	$A(A + B) = A$	$A + AB = A$
De Morgan's law	$\overline{AB} = \bar{A} + \bar{B}$	$\overline{A + B} = \bar{A}\bar{B}$

香港科技大學
THE HONG KONG UNIVERSITY OF SCIENCE AND TECHNOLOGY

Boolean Algebra Example

- **Simplify** $C + \overline{BC}$

- **Simplify** $\overline{AB}(\bar{A} + B)(\bar{B} + B)$

- **Simplify** 3-person majority vote $\mathrm{D} = \overline{\mathrm{A}}\mathrm{BC} + \mathrm{A}\overline{\mathrm{B}}\mathrm{C} + \mathrm{AB}\overline{\mathrm{C}} + \mathrm{ABC}$

香港科技大學
THE HONG KONG UNIVERSITY OF SCIENCE AND TECHNOLOGY

K-Map

- K-Map is a graphical representation of the truth table or logic function
- In a K-map each cell represents one possible minterm
- Cells are arranged following a Gray code i.e., two adjacent cells are such that the corresponding minterms differ in only one variable

香港科技大學
THE HONG KONG UNIVERSITY OF SCIENCE AND TECHNOLOGY

K-map Layout Example

A \ B	0	1
0	m0	m1
1	m2	m3

2 inputs

A \ BC	00	01	11	10
0	m0	m1	m3	m2
1	m4	m5	m7	m6

3 inputs

AB \ CD	00	01	11	10
00	m0	m1	m3	m2
01	m4	m5	m7	m6
11	m12	m13	m15	m14
10	m8	m9	m11	m10

4 inputs

香港科技大學
THE HONG KONG UNIVERSITY OF SCIENCE AND TECHNOLOGY

K-map Simplification Rules

- Find largest size groups of adjacent cells at 1
- 2^N (i.e. 1, 2, 4, 8) adjacent cells in each group
- K-map is toroid (i.e., rightmost cells are adjacent to the leftmost cells and topmost cells are adjacent to bottom cells)
- Larger groups = fewer inputs to the AND gate
- Fewer groups = fewer AND gates and fewer inputs to OR gate
- Best group might not be unique

香港科技大學
THE HONG KONG UNIVERSITY OF SCIENCE AND TECHNOLOGY

Simplification Example

- Simplify $F = A \cdot \overline{B} + A \cdot B + \overline{A} \cdot B$

A \ B	0	1
0	$\overline{A} \cdot \overline{B}$	$\overline{A} \cdot B$
1	$A \cdot \overline{B}$	$A \cdot B$

A \ B	0	1
0	0	1
1	1	1

$$F = A + B$$

- Simplify majority vote

$$D = (\overline{A} \cdot B \cdot C) + (A \cdot B \cdot \overline{C}) + (A \cdot \overline{B} \cdot C) + (A \cdot B \cdot C)$$

A \ BC	00	01	11	10
0	0	0	1	0
1	0	1	1	1

D = AB + AC + BC

香港科技大學
THE HONG KONG UNIVERSITY OF SCIENCE AND TECHNOLOGY

7-Segment Display

- Use 7-segment digital display to display one Hexadecimal digit
- Each segment is represented by a logic function

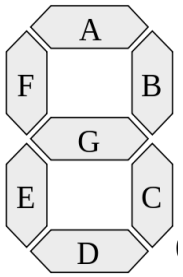

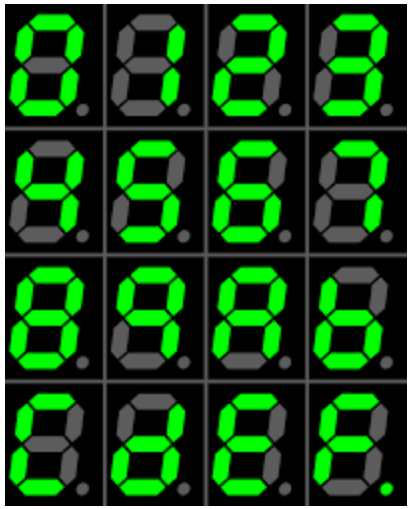

- **Tasks:**
  - Give the truth table for segment G
  - How many inputs needed?
  - Deduce the sum-of-products logic equation from the table
  - Use K-Map to simplify the logic equation

香港科技大學
THE HONG KONG UNIVERSITY OF SCIENCE AND TECHNOLOGY

Truth Table for Segment G

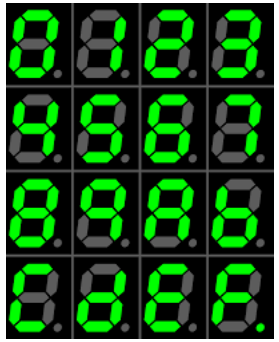

Inputs				Output	
i_3	i_2	i_1	i_0	G	A
0	0	0	0	0	
0	0	0	1	0	
0	0	1	0	1	
0	0	1	1	1	
0	1	0	0	1	
0	1	0	1	1	
0	1	1	0	1	
0	1	1	1	0	
1	0	0	0	1	
1	0	0	1	1	
1	0	1	0	1	
1	0	1	1	1	
1	1	0	0	0	
1	1	0	1	1	
1	1	1	0	1	
1	1	1	1	1	

- Using the table we have 12 minterms for segment G in the logic expression
- Try Segment A as an exercise

香港科技大學
THE HONG KONG UNIVERSITY OF SCIENCE AND TECHNOLOGY

K-Map and Simplification

i_3i_2 \ i_1i_0	00	01	11	10
00	0	0	1	1
01	1	1	0	1
11	0	1	1	1
10	1	1	1	1

香港科技大學
THE HONG KONG UNIVERSITY OF SCIENCE AND TECHNOLOGY

K-Map and Simplification

- $G = i_1 i_0' + i_3 i_2' + i_3 i_0 + i_2' i_1 + i_3' i_2 i_1'$

- **Conclusion:**
  - Before simplification we would need 12 AND gates with 4 inputs each and one OR gate with 12 inputs
  - After we only need 4 AND gates with 2 inputs one AND gate with 3 inputs and one OR gate with 5 inputs

$i_3 i_2$ \ $i_1 i_0$	00	01	11	10
00	0	0	1	1
01	1	1	0	1
11	0	1	1	1
10	1	1	1	1

香港科技大學
THE HONG KONG UNIVERSITY OF SCIENCE AND TECHNOLOGY

BASIC SEQUENTIAL LOGIC

S-R Latch: Simple Storage Element

- **S-R latches (set-reset latches)**
  - **Unclocked** memory element
  - R is used to ‘reset’ or ‘clear’ the element
  - S is used to ‘set’ the element
  - If both R and S are ‘not chosen’, output is in ‘Quiescent’ state
    - hold its previous value
    - can be <u>either</u> 0 or 1
  - Usually built from a pair of cross-coupled NOR (or NAND) gates.

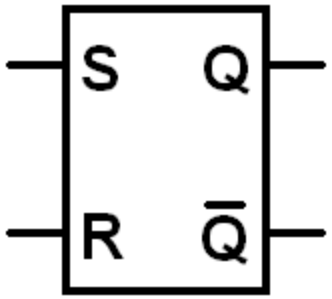

Graphical Symbol

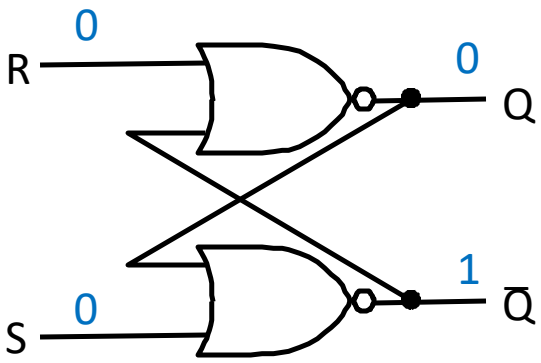

A S-R latch built by NOR gates
in quiescent state when previous value is 0

香港科技大學
THE HONG KONG UNIVERSITY OF SCIENCE AND TECHNOLOGY

Reset S-R Latch

- Suppose we start with Q = 1, then change R to 1

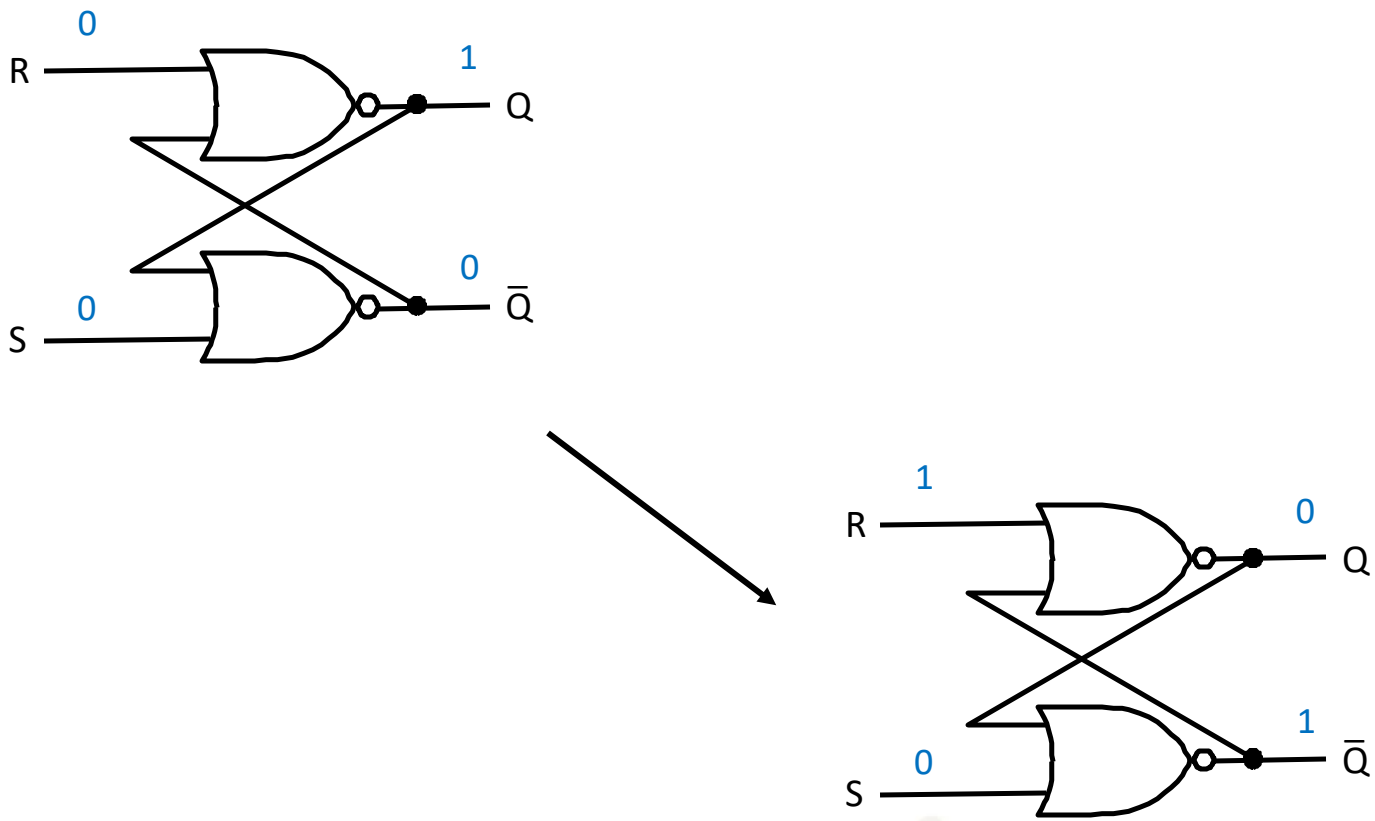

Reset S-R Latch (i.e. storing 0 into Q)

NOR gate

A	B	Output
0	0	1
0	1	0
1	0	0
1	1	0

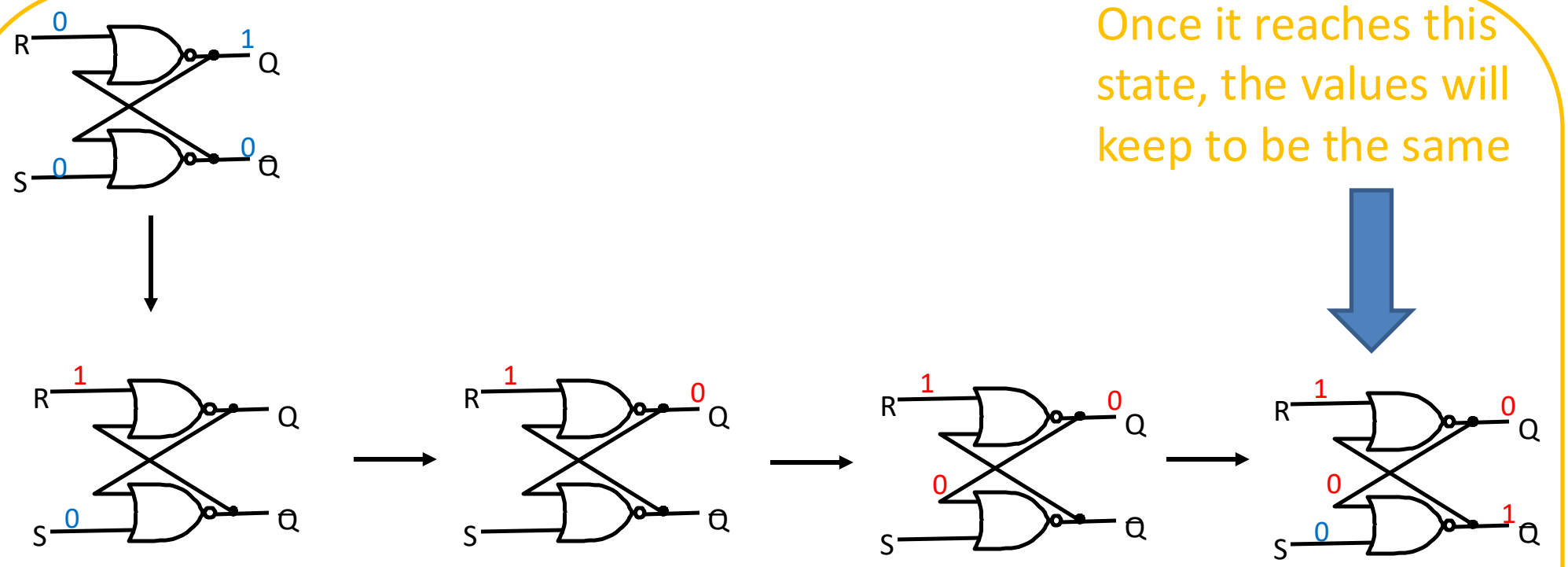

Once it reaches this state, the values will keep to be the same

Reset S-R Latch (i.e. storing 0 into Q)

NOR gate

A	B	Output
0	0	1
0	1	0
1	0	0
1	1	0

Once it reaches this state, the Q and ~Q values will be stabilized and keep to be the same

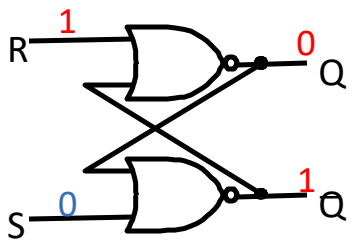

Reset S-R Latch (i.e. storing 0 into Q)

NOR gate

A	B	Output
0	0	1
0	1	0
1	0	0
1	1	0

Once it reaches this state, the Q and ~Q values will be stabilized and keep to be the same

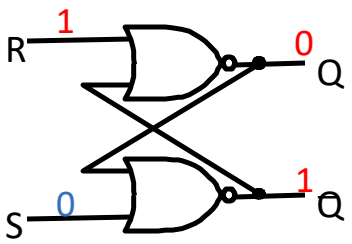

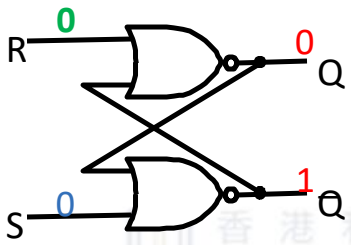

Changing R to 0 will not change Q and ~Q

香港科技大學
THE HONG KONG UNIVERSITY OF SCIENCE AND TECHNOLOGY

Reset S-R Latch (i.e. storing 0 into Q)

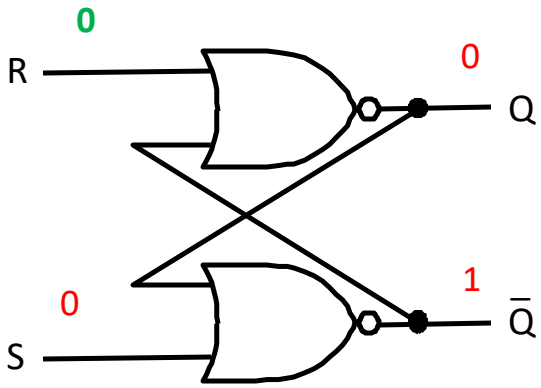

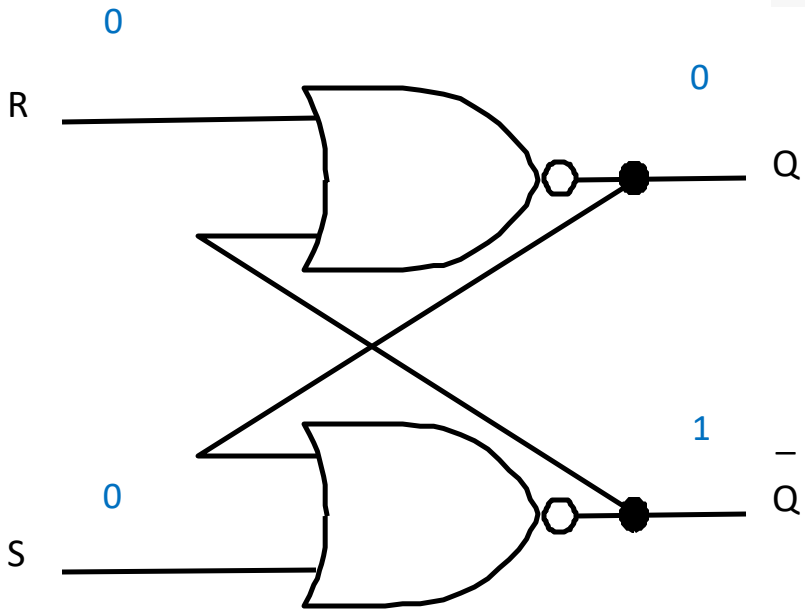

香港科技大學
THE HONG KONG UNIVERSITY OF SCIENCE AND TECHNOLOGY

Set the S-R Latch

- Suppose we start Q = 0, then change S to 1

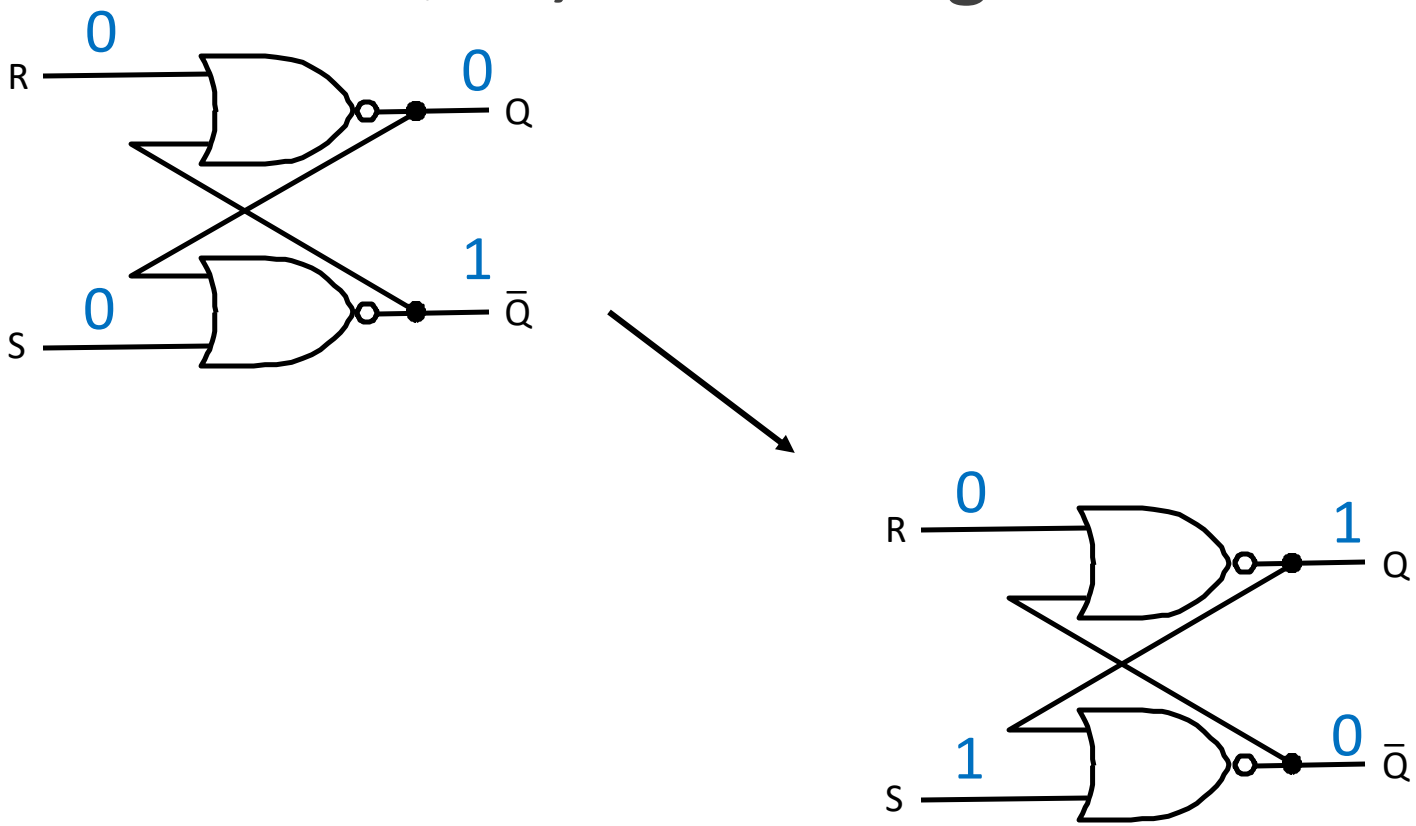

Set S-R Latch (i.e. storing 1 into Q)

NOR gate

A	B	Output
0	0	1
0	1	0
1	0	0
1	1	0

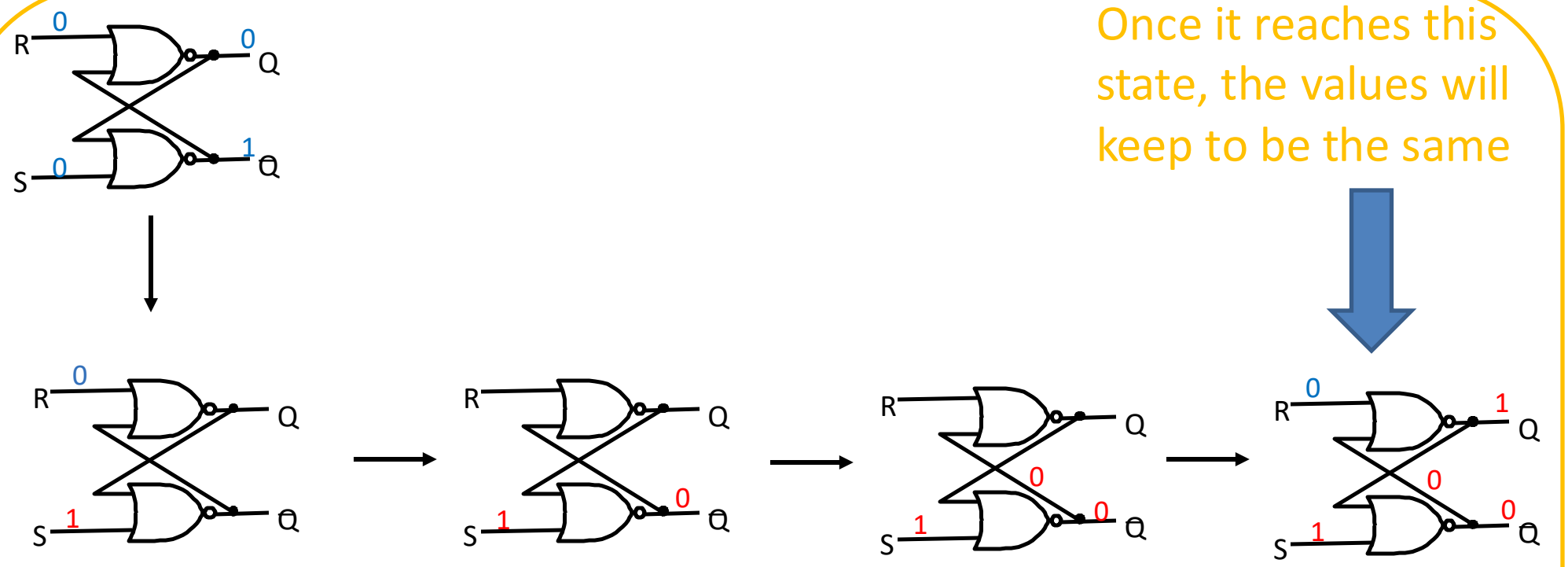

Once it reaches this state, the values will keep to be the same

Set S-R Latch (i.e. storing 1 into Q)

NOR gate

A	B	Output
0	0	1
0	1	0
1	0	0
1	1	0

Once it reaches this state, the Q and ~Q values will be stabilized and keep to be the same

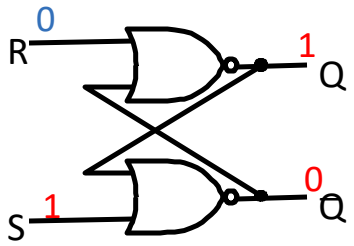

Set S-R Latch (i.e. storing 1 into Q)

NOR gate

A	B	Output
0	0	1
0	1	0
1	0	0
1	1	0

Once it reaches this state, the Q and ~Q values will be stabilized and keep to be the same

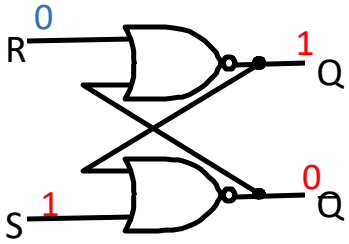

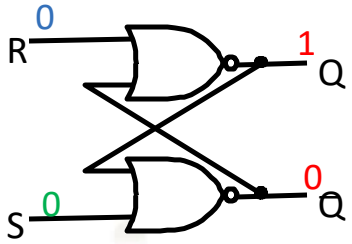

Changing R to 0 will not change Q and ~Q

香港科技大學
THE HONG KONG UNIVERSITY OF SCIENCE AND TECHNOLOGY

Set S-R Latch (i.e. storing 1 into Q)

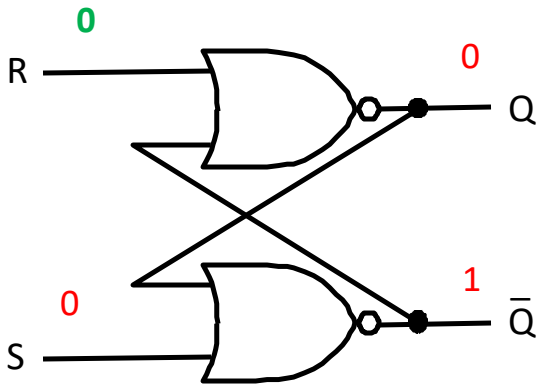

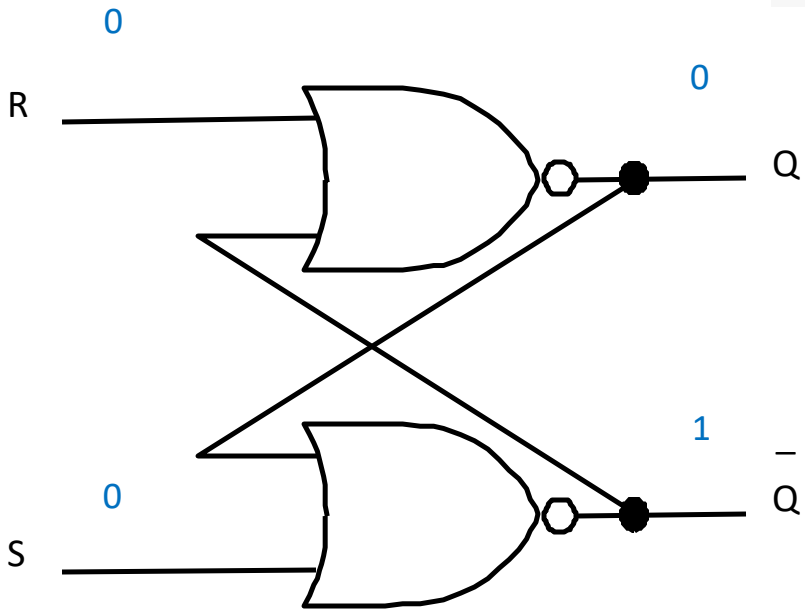

香港科技大學
THE HONG KONG UNIVERSITY OF SCIENCE AND TECHNOLOGY

S-R Latch (with NOR Gate) Summary

- **Both Set and Reset are de-asserted (low), R = 0, S = 0**
  - Hold current value in latch
- **Reset is asserted, R = 1, S = 0**
  - Set value to 0
- **Set is asserted, R = 0, S = 1**
  - Set value to 1
- **Both are asserted (high), R = 1, S = 1**
  - Both outputs equal to 0
  - Final state determined by electrical properties of gates (racing condition)
  - Invalid input

Inputs		Outputs	
R	S	Q	Not Q
0	0	Latch	
1	0	0	1
0	1	1	0
1	1	Invalid	

香港科技大學
THE HONG KONG UNIVERSITY OF SCIENCE AND TECHNOLOGY

Gated D-Latch

- D-latch with two inputs
  - D (data)
  - WE (write enable)
- When WE = 1, latch is set to value of D
- When WE = 0, latch holds previous value

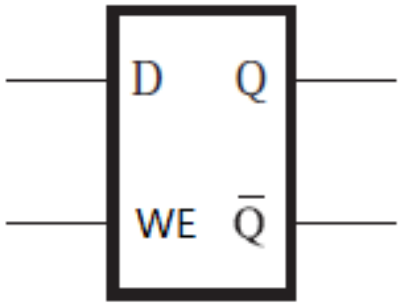

Graphical Symbol

Inputs		Outputs	
WE	D	Q	Not Q
0	0	Latch	
0	1	Latch	
1	0	0	1
1	1	1	0

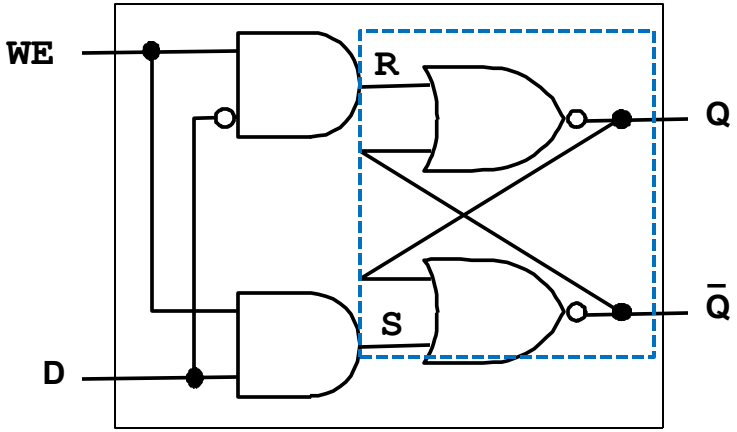

A gated D latch built by NOR S-R latches

香港科技大學
THE HONG KONG UNIVERSITY OF SCIENCE AND TECHNOLOGY

Register

- **A register stores a multi-bit value**
  - A collection of D-latches, all controlled by a common WE
  - WE = 1, n-bit value D is written to the register

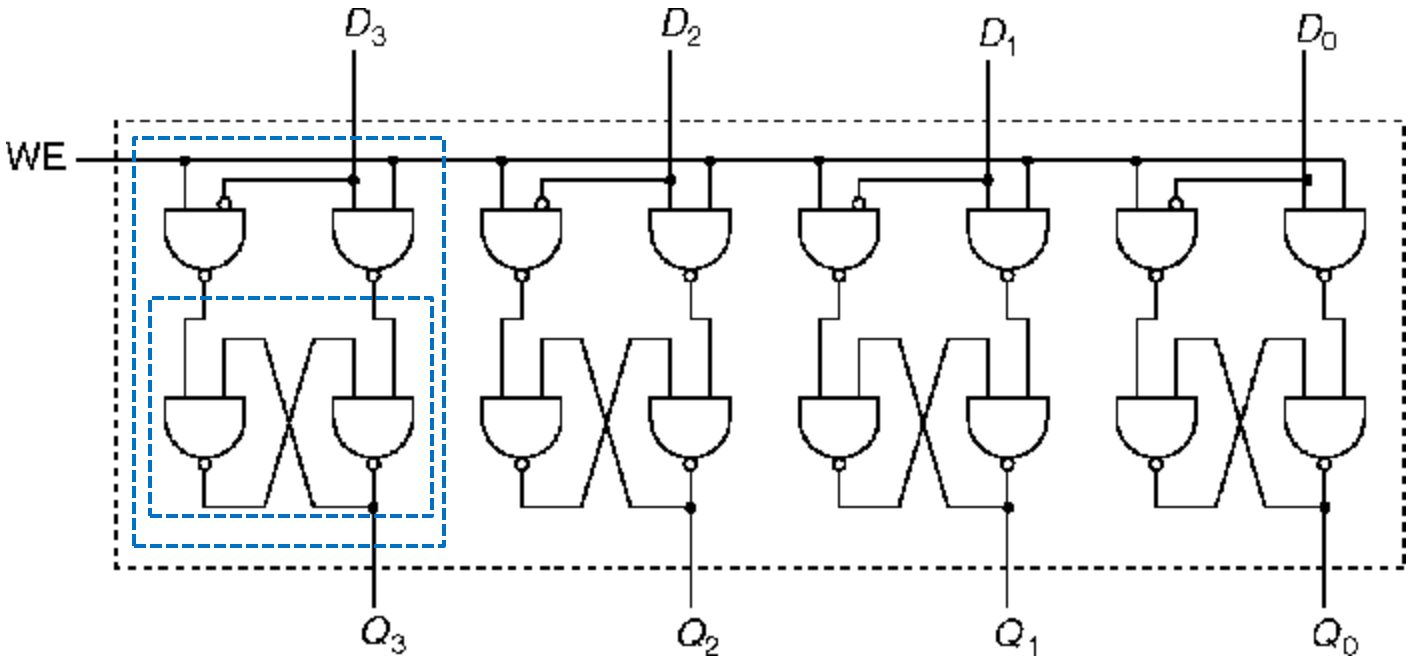

4-bit register built with D-latch

Clock Signal

- A microprocessor is composed of many different circuits that are operating simultaneously – if each circuit X takes in inputs at time T_{in}, takes time T_{exe} to execute the logic, and produces outputs at time Tout, imagine the complications in coordinating the tasks of every circuit
- Solution: all circuits on the chip share a clock signal (a square wave) that tells every circuit when to accept inputs, how much time they have to execute the logic, and when they must produce outputs

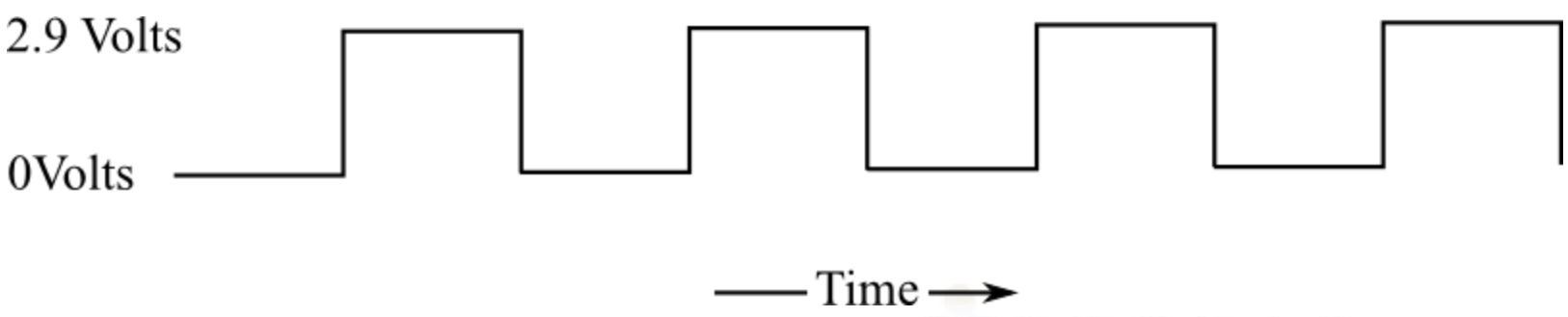

香港科技大學
THE HONG KONG UNIVERSITY OF SCIENCE AND TECHNOLOGY

Clock Terminology

- A **clock** is a free-running signal with a fixed **cycle time** (called **clock period**) or, equivalently, a fixed **clock frequency** (i.e., inverse of the cycle time).

- **Edge-triggered clocking**:
  - Design methodology for sequential logic circuits in which all state changes occur on a clock edge (**rising edge** or **falling edge**).

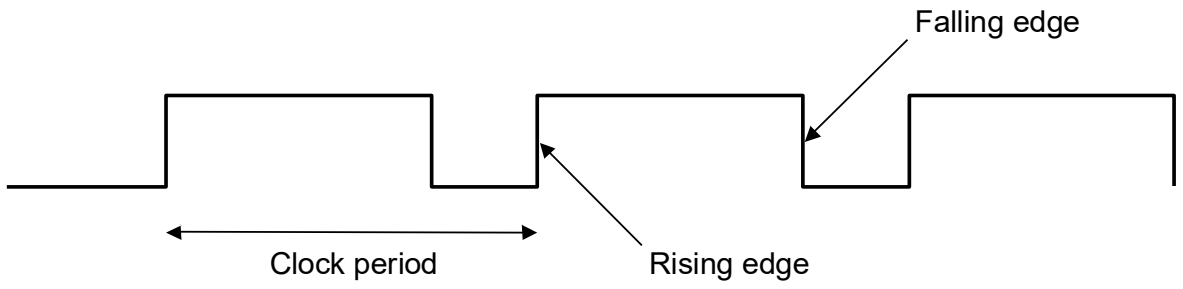

- **Example** $4\ GHZ = clock\ speed = \frac{1}{cycle\ time} = \frac{1}{250\ ps}$

香港科技大學
THE HONG KONG UNIVERSITY OF SCIENCE AND TECHNOLOGY

Timing Diagram

- **Digital timing diagram**
  - A representation of a set of signals in the time domain
  - Can contain many rows, usually one of them being the clock
- **Example: timing diagram of D latch**
  - Use clock signal as WD

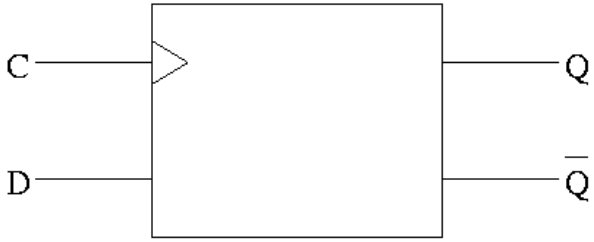

Graphic symbol
D latch with clock

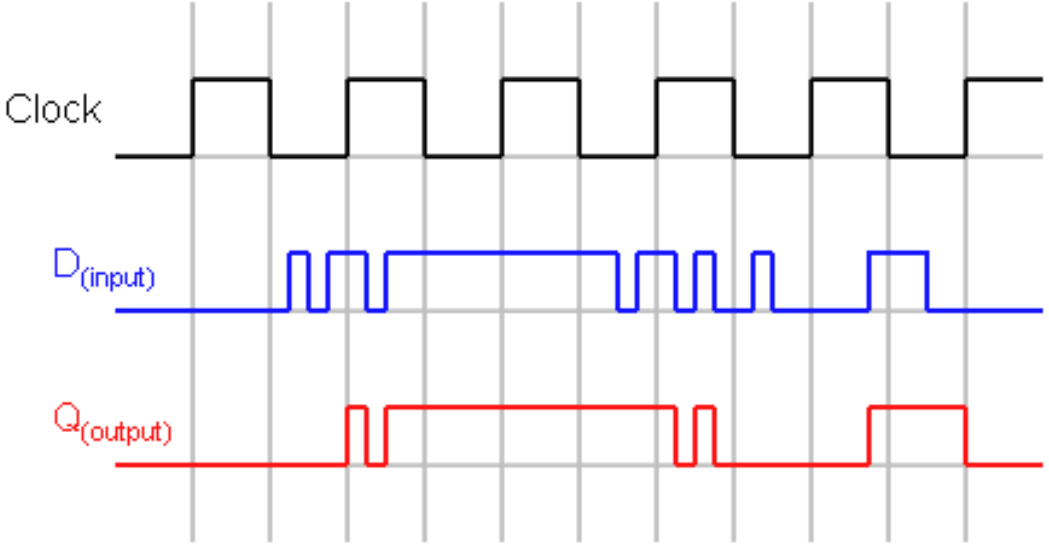

THE HONG KONG UNIVERSITY OF SCIENCE AND TECHNOLOGY

Master-Slave D Flip-Flop

- Built by a pair of clock-gated D-latches
- Terminology:
  - Latch: outputs can change any time the clock is asserted (high)
  - Flip-flop: outputs can change only on a clock edge
- Example: Falling-edge-triggered master-slave D flip-flop
  - When the clock input C changes from asserted to de-asserted, the Q output stores the value of the D input.

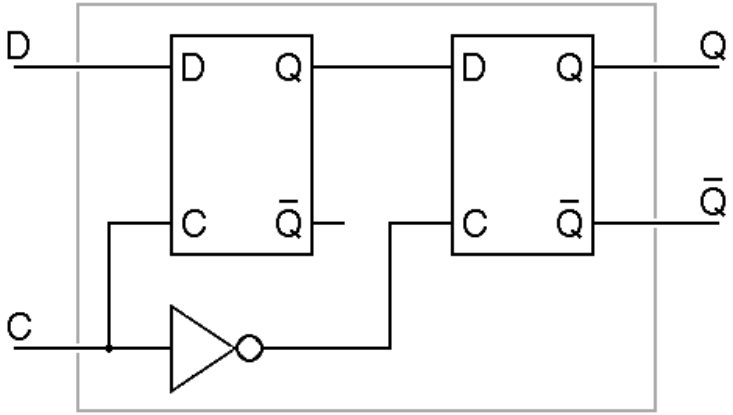

Master-Slave D Flip-Flop (the dynamic)

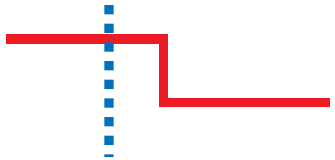

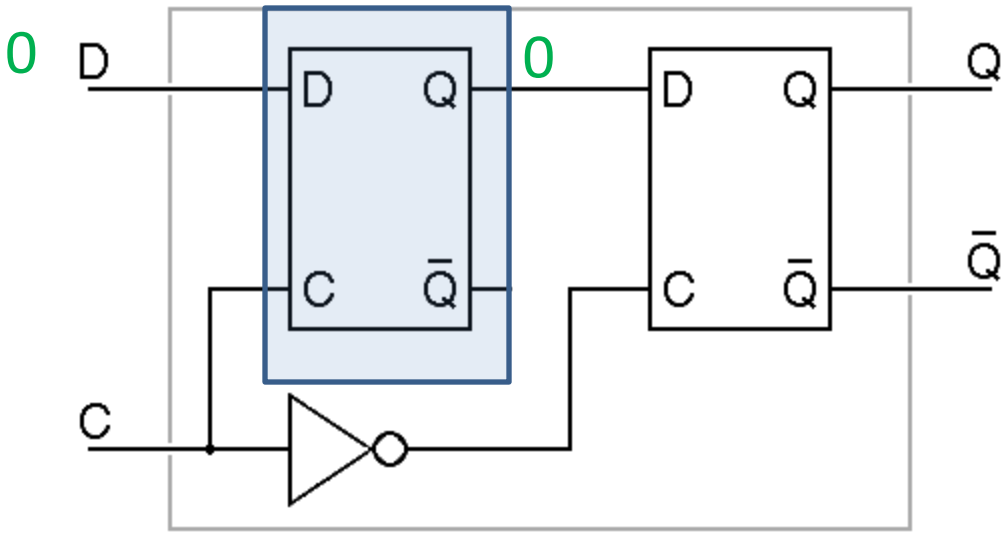

Master-Slave D Flip-Flop (the dynamic)

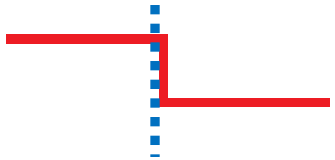

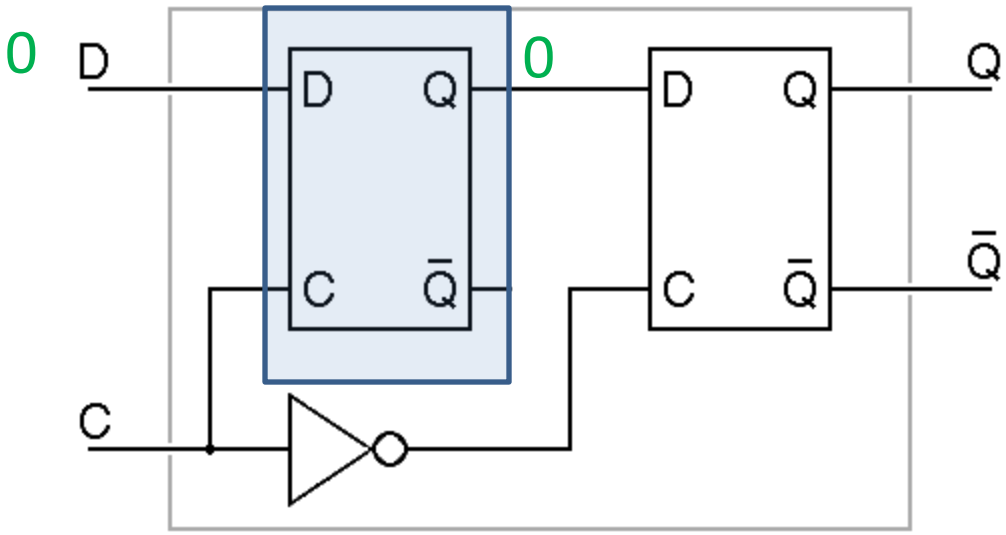

Master-Slave D Flip-Flop (the dynamic)

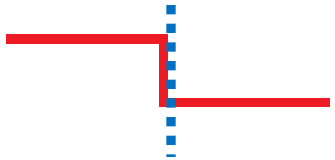

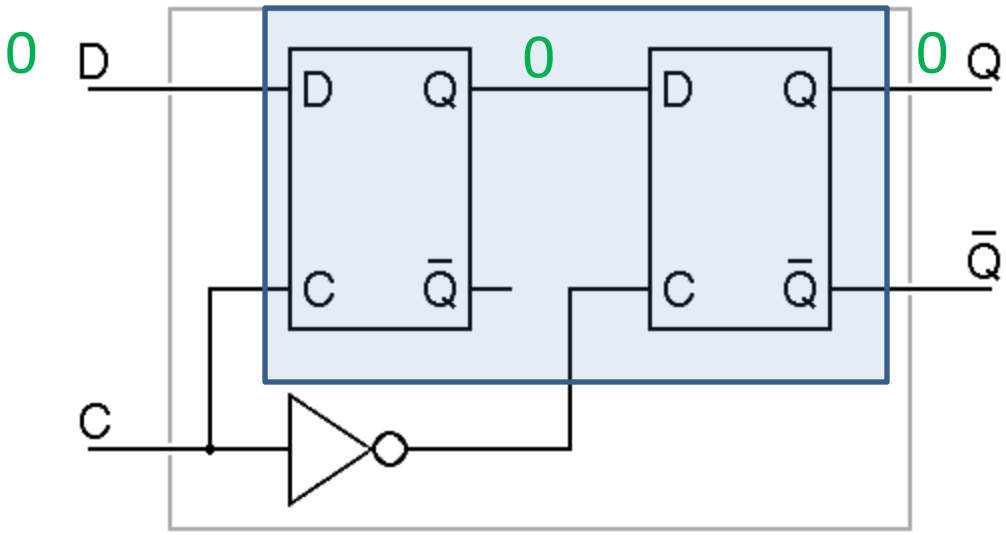

Master-Slave D Flip-Flop (the dynamic)

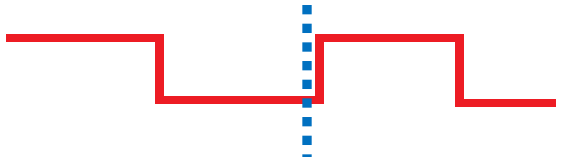

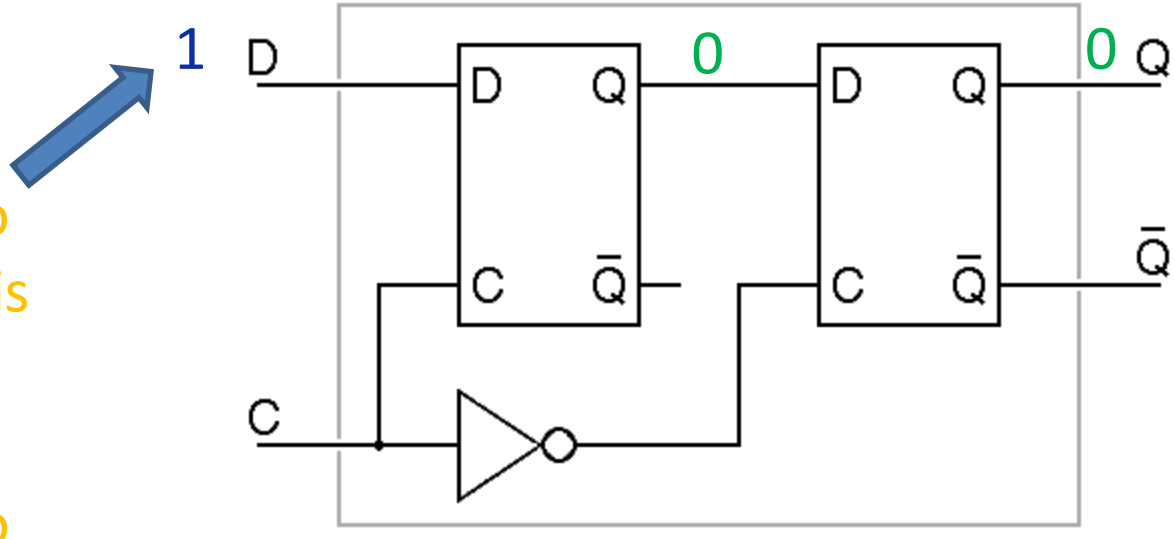

Input changed to 1, but since CLK is low so the value does not even manage to get to the master D latch

Master-Slave D Flip-Flop (the dynamic)

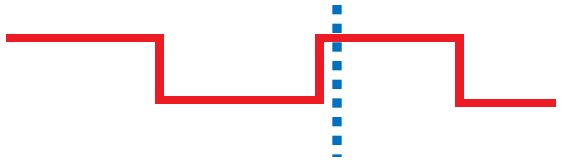

CLK is high, the value 1 manages to get to the master D latch

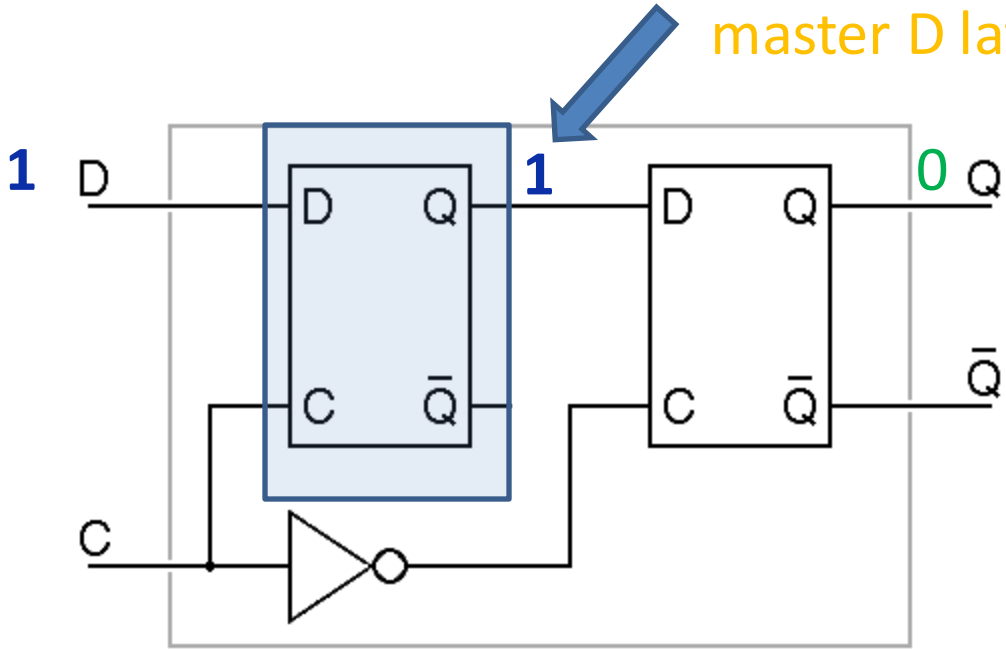

Master-Slave D Flip-Flop (the dynamic)

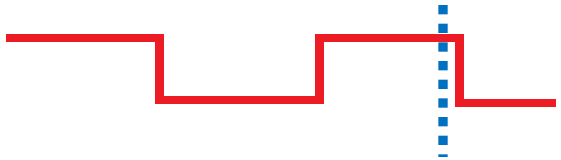

CLK is still high, the value 1 still just gets to the master D latch

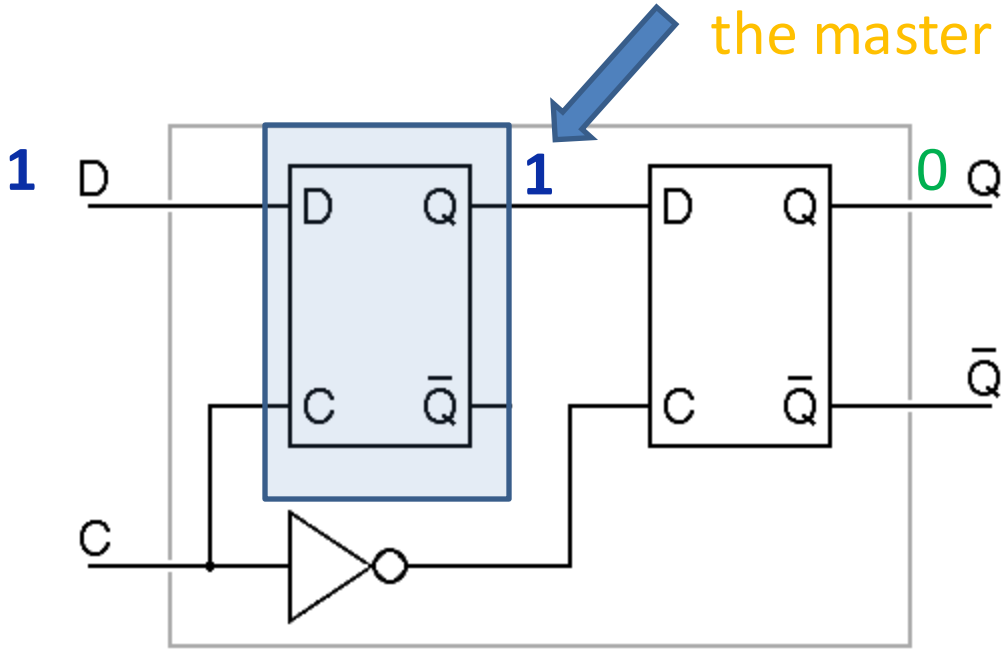

Master-Slave D Flip-Flop (the dynamic)

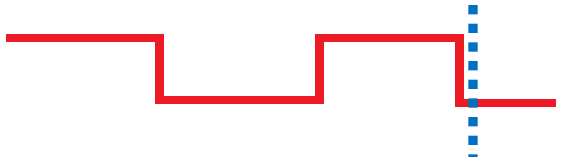

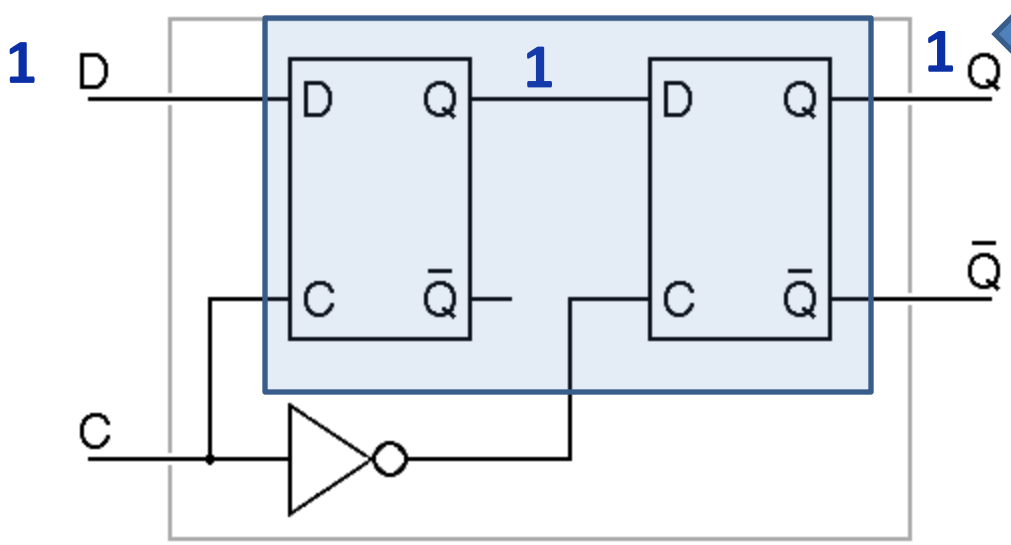

After the falling edge the value 1 manages to get to the slave D latch and get stored in the circuit

Falling-edge-triggered Master-slave D Flip-flop

- When clock is asserted, D is updated in Master flip-flop
- When clock is de-asserted (1->0, falling edge), D is updated in Slave flip-flop, and is visible in Output Q

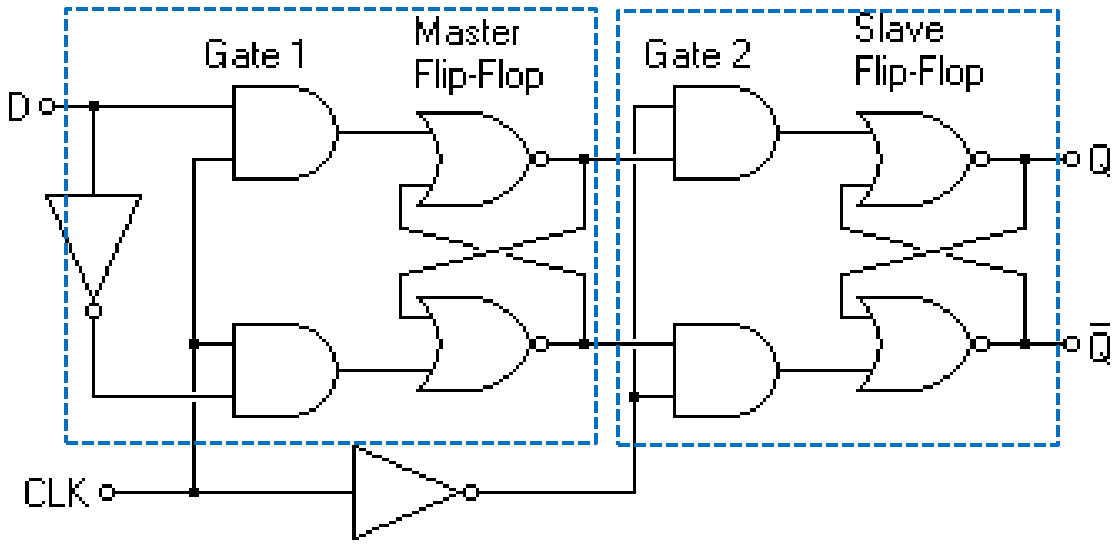

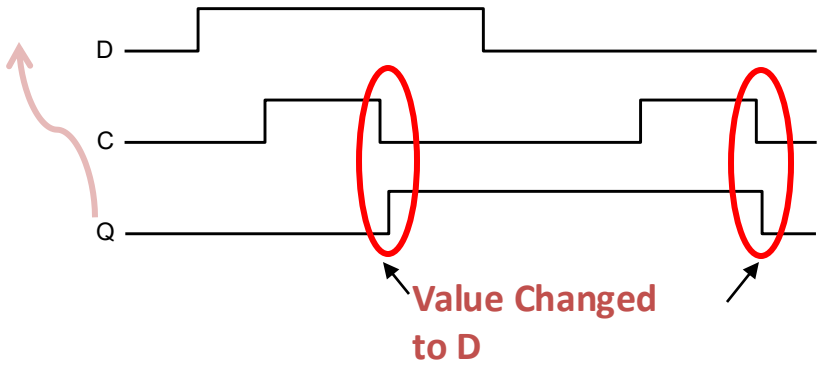

香港科技大學
THE HONG KONG UNIVERSITY OF SCIENCE AND TECHNOLOGY

Sequential Circuit

- Combines combinational logic with storage
- 'Remembers' state, and changes output (and state) based on inputs and current state
- The state of a system is a snapshot of all the relevant elements of the system at the moment the snapshot is taken
- Frequently, a clock circuit triggers transition from one state to the next

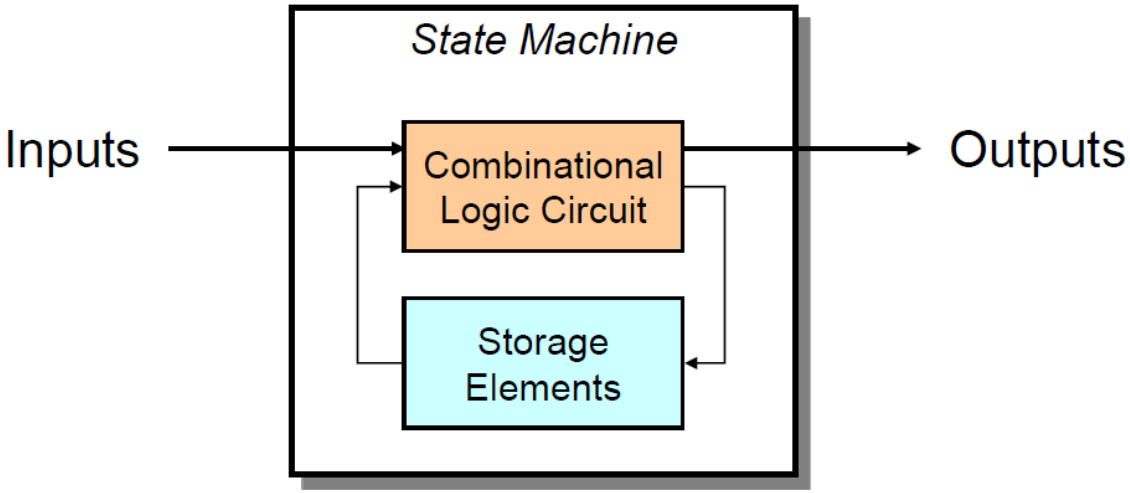

香港科技大學
THE HONG KONG UNIVERSITY OF SCIENCE AND TECHNOLOGY

Concluding Remarks

- Logic operation: NOT, AND, OR, NAND, NOR, XOR
- Logic gate
- Truth table and logic function
- Combinational vs. sequential circuit
- Building blocks of combinational logic: Decoder/Encoder, Multiplexor, Demultiplexor
- Two-level logic: sum-of-product and product-of-sum
- PLA
- Boolean Algebra
- Karnaugh-Maps (K-maps)

- S-R latch
- Gated D-latch
- Clock and timing diagram
- D flip-flop

香港科技大學
THE HONG KONG UNIVERSITY OF SCIENCE AND TECHNOLOGY