TUTORIAL 1 COMBINATIONAL LOGIC CIRCUIT

Overview

- **We will review the following concept in this tutorial:**
- **Combinational logic circuit**
  - No memory, output(s) solely determined by input(s)
- **Truth table and logic function**
- **Two-level logic and PLA**
- **Simplification with Boolean Algebra and K-map**
- **Circuit design**

- **Work with two practical examples**
  - Bit comparator
  - Encoder

香港科技大學
THE HONG KONG UNIVERSITY OF SCIENCE AND TECHNOLOGY

Digital Logic Circuit

- **Two types of digital logic circuits inside a computer:**
  - **Combinational logic circuits**
    - Logic circuits that do not have memory
    - The output depends only on the current inputs and the circuit
    - They can be specified fully with a truth table or a logic equation
  - **Sequential logic circuits**
    - Logic circuits that have memory
    - The output depends on both the current inputs and the value stored in memory (called state)

香港科技大學
THE HONG KONG UNIVERSITY OF SCIENCE AND TECHNOLOGY

Circuit Design Process

- **A simple logic design process involves**
  - Problem specification
  - Truth table derivation
  - Derivation of logical expression
  - Simplification of logical expression
  - Implementation

香港科技大學
THE HONG KONG UNIVERSITY OF SCIENCE AND TECHNOLOGY

Review of Boolean Algebra

- **Boolean algebra consists of**
  - Boolean variables (with values equal to either ‘0’ or ‘1’)
  - Binary operators: AND (·), OR (+), NOT (‘)
- **Any logic function can be expressed as a two-level logic expression, either as**
  - Sum-of-Products (SoP) representation, or
  - Product-of-Sums (PoS) representation
- **The AND, OR, and NOT operations form a functionally complete set (namely, universal gates), as they can specify any logic function.**

香港科技大學
THE HONG KONG UNIVERSITY OF SCIENCE AND TECHNOLOGY

Basic Laws of Boolean Algebra

Name	AND form	OR form
Identity law	$1A = A$	$0 + A = A$
Null law	$0A = 0$	$1 + A = 1$
Idempotent law	$AA = A$	$A + A = A$
Inverse law	$A\bar{A} = 0$	$A + \bar{A} = 1$
Commutative law	$AB = BA$	$A + B = B + A$
Associative law	$(AB)C = A(BC)$	$(A + B) + C = A + (B + C)$
Distributive law	$A + BC = (A + B)(A + C)$	$A(B + C) = AB + AC$
Absorption law	$A(A + B) = A$	$A + AB = A$
De Morgan's law	$\overline{AB} = \bar{A} + \bar{B}$	$\overline{A + B} = \bar{A}\bar{B}$

香港科技大學
THE HONG KONG UNIVERSITY OF SCIENCE AND TECHNOLOGY

Boolean Algebra Exercise 1

- Find the direct Boolean expression for the following circuit
- Simplify the Boolean expression using Boolean algebra
- Draw the new circuit for the simplified Boolean expression

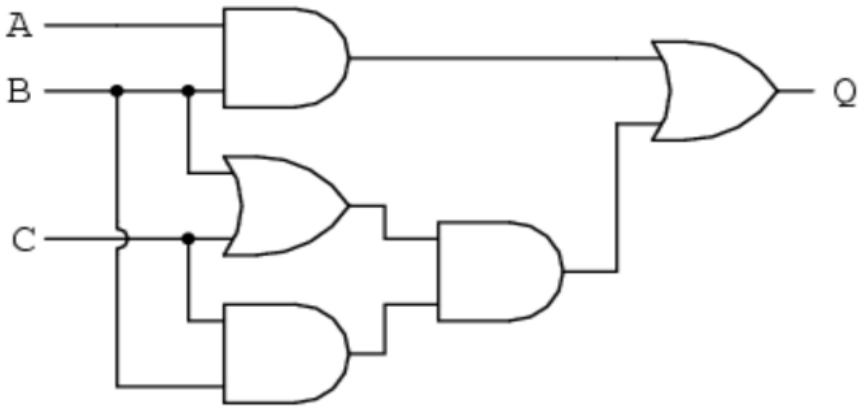

Solution

$Q = AB + (B + C)(CB)$

$Q = AB + BCB + CCB$ (distributive)

$Q = AB + BC + BC$ (idempotent)

$Q = AB + BC$ (idempotent)

$Q = B(A + C)$ (distributive)

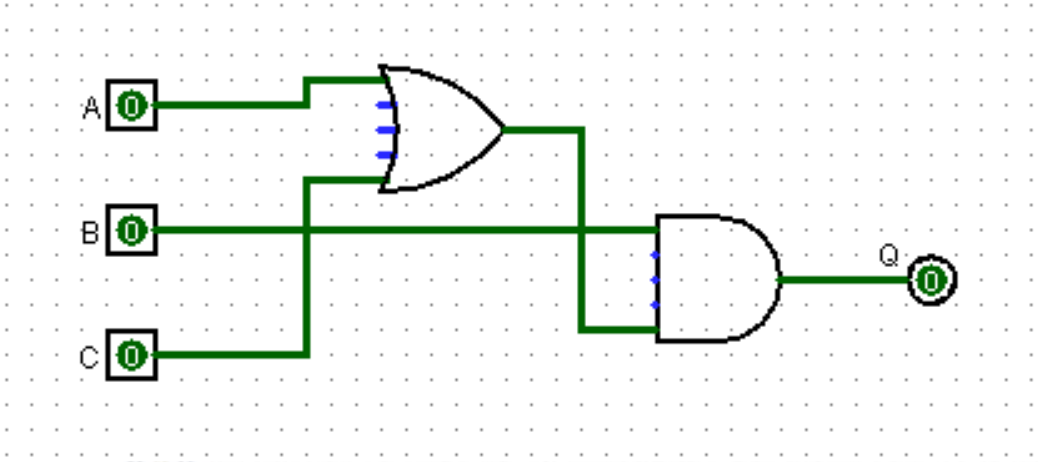

THE HONG KONG UNIVERSITY OF SCIENCE AND TECHNOLOGY

Boolean Algebra Exercise 2

- **Simplify the combinational logic circuit shown below to a minimum form**

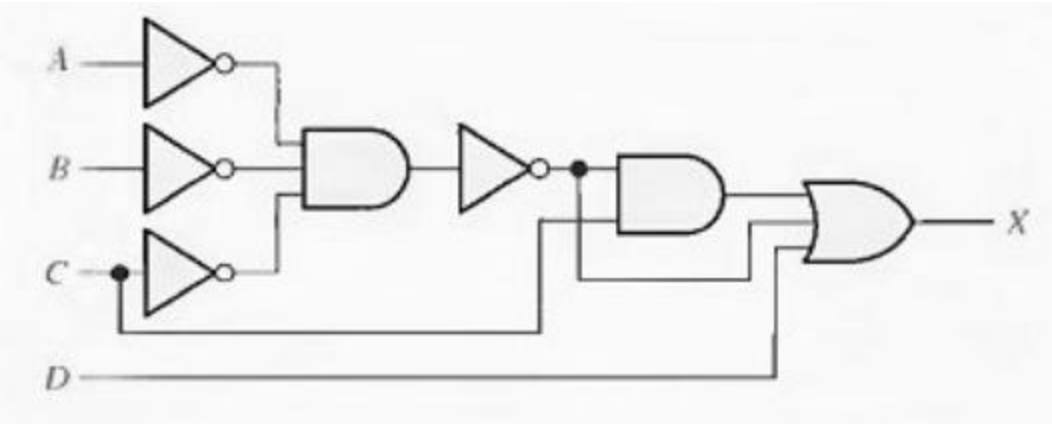

Solution

$X = X_1 + X_2 + D$

$X = X_2C + X_2 + D = X_2 + D$ (absorption)

$X = \overline{\overline{A}\,\overline{B}\,\overline{C}} + D = A + B + C + D$ (de Morgan)

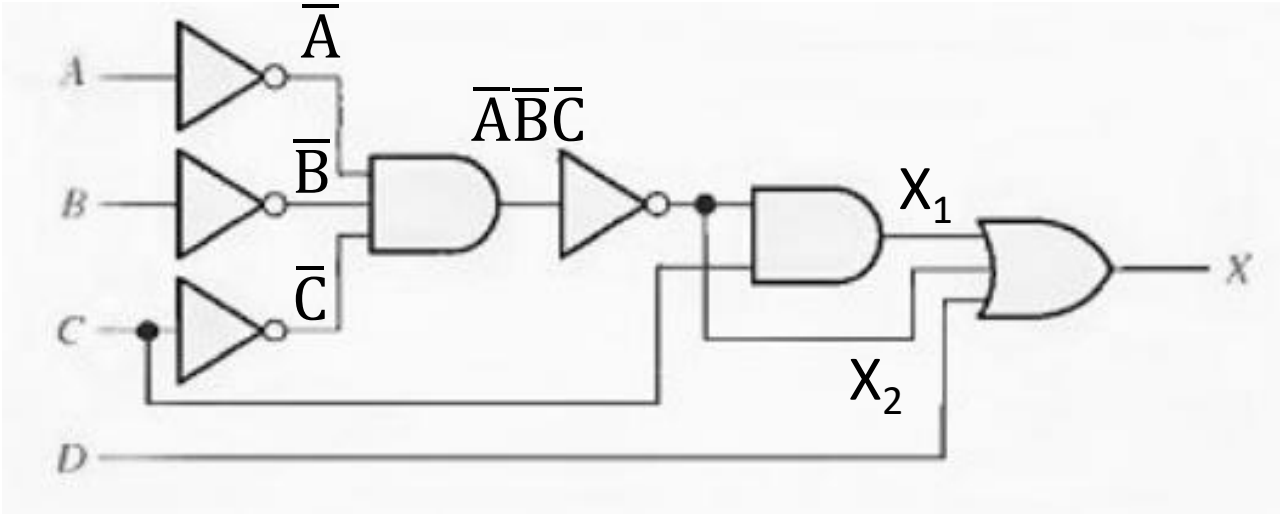

Boolean Algebra Exercise 3

- **Simplify the following Boolean expression**

$$AB + \overline{AB}CD + \overline{CD}EF$$

香港科技大學
THE HONG KONG UNIVERSITY OF SCIENCE AND TECHNOLOGY

Solution – Boolean algebra

$$AB + \overline{AB}CD + \overline{CD}EF$$

$$= AB + ABCD + \overline{AB}CD + \overline{CD}EF \quad \textbf{(absorption)}$$

$$= AB + (AB + \overline{AB})CD + \overline{CD}EF \quad \textbf{(distribution)}$$

$$= AB + CD + \overline{CD}EF \quad \textbf{(inverse, identity)}$$

$$= AB + CD + CDEF + \overline{CD}EF \quad \textbf{(absorption)}$$

$$= AB + CD + (CD + \overline{CD})EF \quad \textbf{(distribution)}$$

$$= AB + CD + EF \quad \textbf{(inverse, identity)}$$

香港科技大學
THE HONG KONG UNIVERSITY OF SCIENCE AND TECHNOLOGY

Solution – K-map (3-input version)

- **Let's substitute into 3 variables: X, Y, and Z**
  - X = AB
  - Y = CD
  - Z = EF
- **Then our expression becomes:**
  - $X + \bar{X}Y + \bar{Y}Z$
- **Note: the variables were assigned this way since they always go together.**

香港科技大學
THE HONG KONG UNIVERSITY OF SCIENCE AND TECHNOLOGY

Solution – K-map (3-input version)

YZ

X		00	01	11	10
	0				
	1				

香港科技大學
THE HONG KONG UNIVERSITY OF SCIENCE AND TECHNOLOGY

Solution – K-map (3-input version)

X \ YZ	00	01	11	10
0				
1	1	1	1	1

■ **Red** = X

香港科技大學
THE HONG KONG UNIVERSITY OF SCIENCE AND TECHNOLOGY

Solution – K-map (3-input version)

X \ YZ	00	01	11	10
0			1	1
1	1	1	1	1

- **Red** = X
- **Blue** = $\bar{X}Y$

香港科技大學
THE HONG KONG UNIVERSITY OF SCIENCE AND TECHNOLOGY

Solution – K-map (3-input version)

X \ YZ	00	01	11	10
0		1	1	1
1	1	1	1	1

- **Red** = X
- **Blue** = $\bar{X}Y$
- **Green** = $\bar{Y}Z$

香港科技大學
THE HONG KONG UNIVERSITY OF SCIENCE AND TECHNOLOGY

Solution – K-map (3-input version)

X \ YZ	00	01	11	10
0		1	1	1
1	1	1	1	1

- **Red** = X
- **Blue** = $\bar{X}Y$
- **Green** = $\bar{Y}Z$

- **Choose largest power-of-2 connected squares:**

$$X + Y + Z$$

香港科技大學
THE HONG KONG UNIVERSITY OF SCIENCE AND TECHNOLOGY

2-bit Comparator Exercise

- Here we'll be designing circuits to compare 2-bit binary numbers.
- Suppose we have two 2-bit numbers A & B at the inputs, and three outputs as A>B, A==B, A<B
- Only one of the three outputs would be true accordingly if A is greater than or equal to or less than B.
- We'll practice the circuit design for f(A==B), try to work on f(A>B) and f(A<B) by yourself

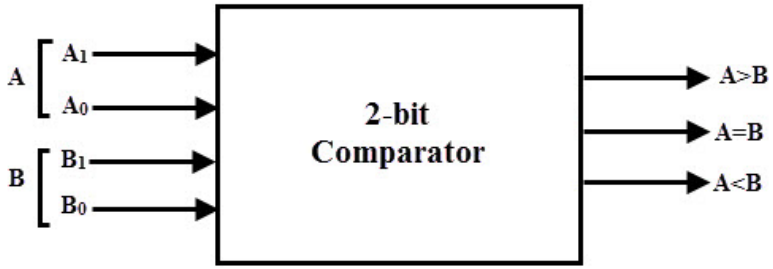

科 技 大 學
THE HONG KONG UNIVERSITY OF SCIENCE AND TECHNOLOGY

Solution: 2-bit Comparator Truth Table

$A(A_1A_0)$	$B(B_1B_0)$	f (A>B)	f (A==B)	f (A<B)
00	00			
01	00			
10	00			
11	00			
00	01			
01	01			
10	01			
11	01			
00	10			
01	10			
10	10			
11	10			
00	11			
01	11			
10	11			
11	11			

香港科技大學
THE HONG KONG UNIVERSITY OF SCIENCE AND TECHNOLOGY

Solution: Logic Function for f(A==B)

- **For each output,**
  - Observe the rows that the output has a value of ‘1’.
  - For f(A==B), the 1’s are at the 1st, 6th, 11th and the 16th row.

- **Write the 1-minterms**
  - For f(A==B), the four 1’s correspond to the input patterns (A=00,B=00), (A=01,B=01), (A=10,B=10) and (A=11,B=11).
  - The four 1-minterms are:

$$\overline{A_1}\,\overline{A_0}\,\overline{B_1}\,\overline{B_0}, \overline{A_1}A_0\overline{B_1}B_0, A_1\overline{A_0}B_1\overline{B_0}, A_1A_0B_1B_0$$

- **Write the outputs as the OR operation of the 1-minterms found**

$$f(A == B) = \overline{A_1}\,\overline{A_0}\,\overline{B_1}\,\overline{B_0} + \overline{A_1}A_0\overline{B_1}B_0 + A_1\overline{A_0}B_1\overline{B_0} + A_1A_0B_1B_0$$

香港科技大學
THE HONG KONG UNIVERSITY OF SCIENCE AND TECHNOLOGY

Solution: Circuit for f(A==B)

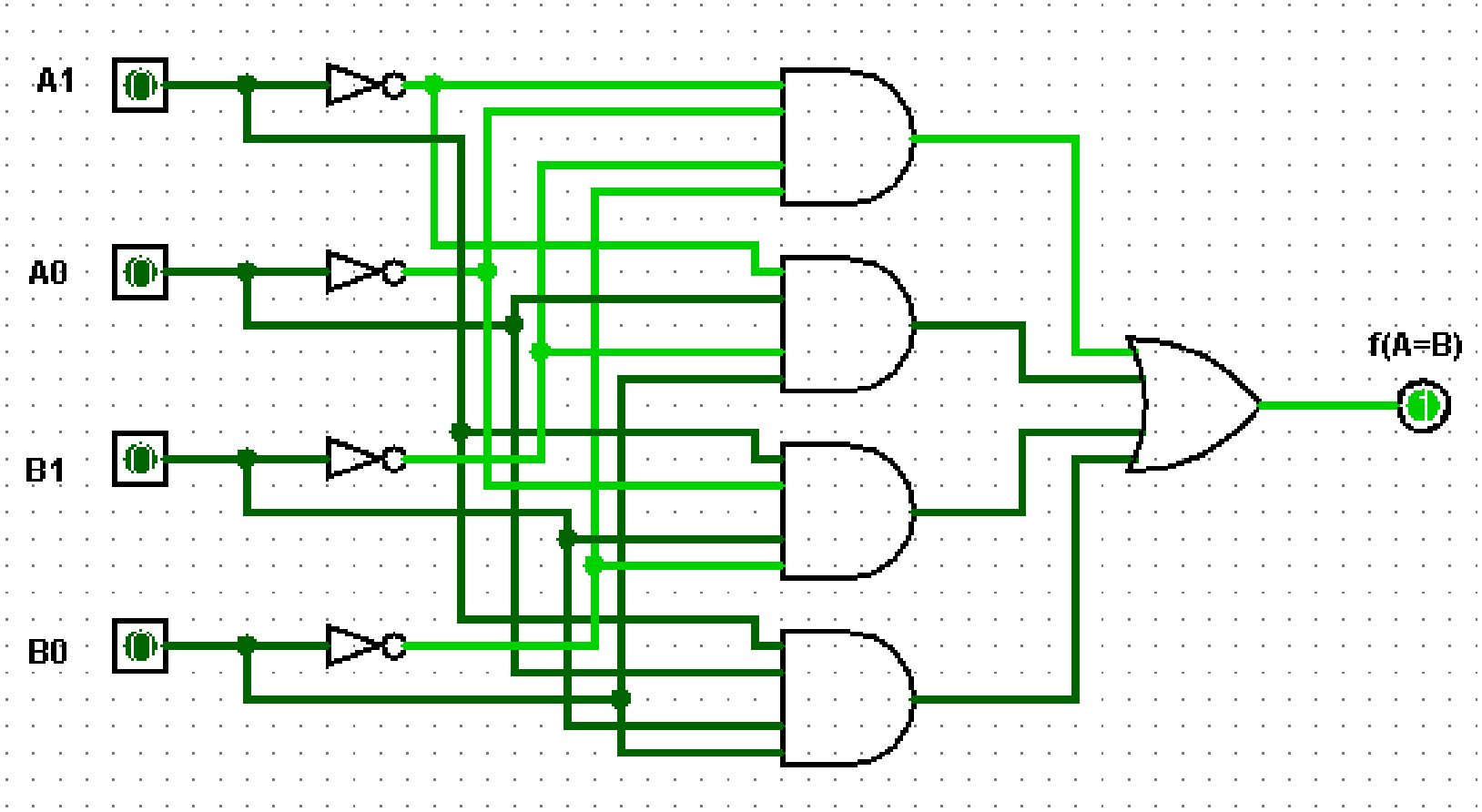

Solution: PLA Implementation

- The same circuit can be equivalently represented by a **programmable logic array** (PLA) circuit.

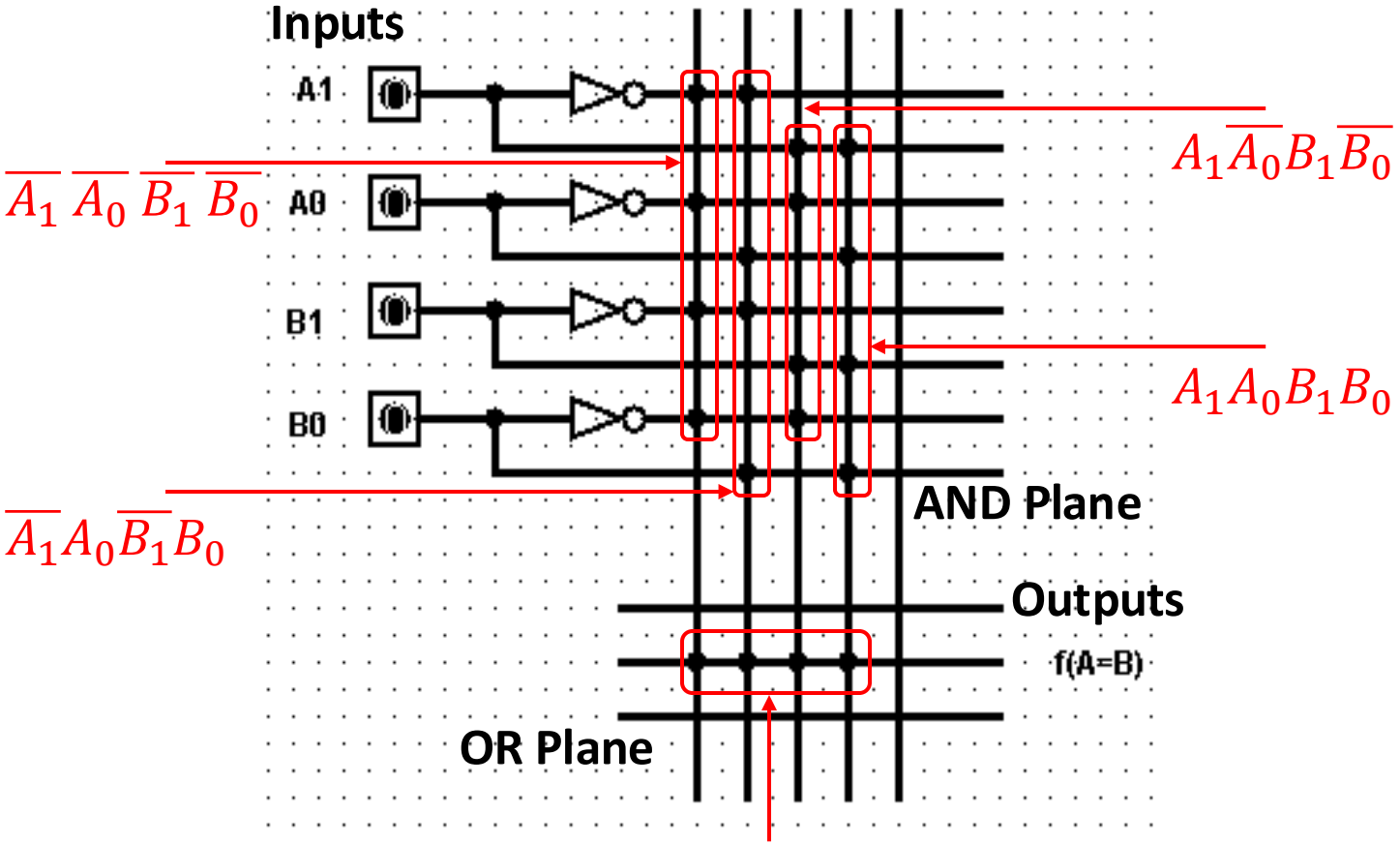

$$f(A == B) = \overline{A_1}\,\overline{A_0}\,\overline{B_1}\,\overline{B_0} + \overline{A_1}A_0\overline{B_1}B_0 + A_1\overline{A_0}B_1\overline{B_0} + A_1A_0B_1B_0$$

8-to-3 Encoder Exercise

- An encoder (2^N-to-N encoder) is a logical block with 2^N 1-bit inputs and a N-bit output, which performs the inverse function of a decoder.

- Example (8-to-3 encoder)
  - 8 inputs (D_0, D_1, …, D_7) and 3 outputs (X, Y, Z)

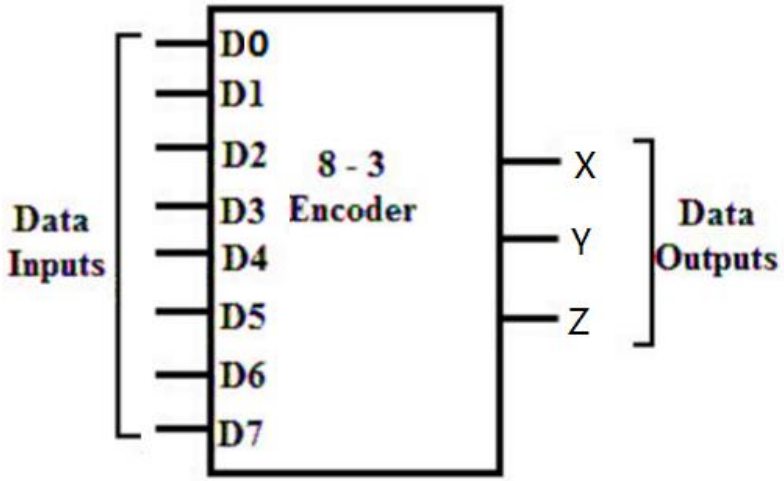

- Let's design the circuits for X, Y, Z

香港科技大學
THE HONG KONG UNIVERSITY OF SCIENCE AND TECHNOLOGY

8-to-3 Encoder Truth Table

D_0	D_1	D_2	D_3	D_4	D_5	D_6	D_7	X	Y	Z
1	0	0	0	0	0	0	0	0	0	0
0	1	0	0	0	0	0	0	0	0	1
0	0	1	0	0	0	0	0	0	1	0
0	0	0	1	0	0	0	0	0	1	1
0	0	0	0	1	0	0	0	1	0	0
0	0	0	0	0	1	0	0	1	0	1
0	0	0	0	0	0	1	0	1	1	0
0	0	0	0	0	0	0	1	1	1	1

香港科技大學
THE HONG KONG UNIVERSITY OF SCIENCE AND TECHNOLOGY

Solution: Logic Function and Circuit

- $X = D_4 + D_5 + D_6 + D_7$
- $Y = D_2 + D_3 + D_6 + D_7$
- $Z = D_1 + D_3 + D_5 + D_7$

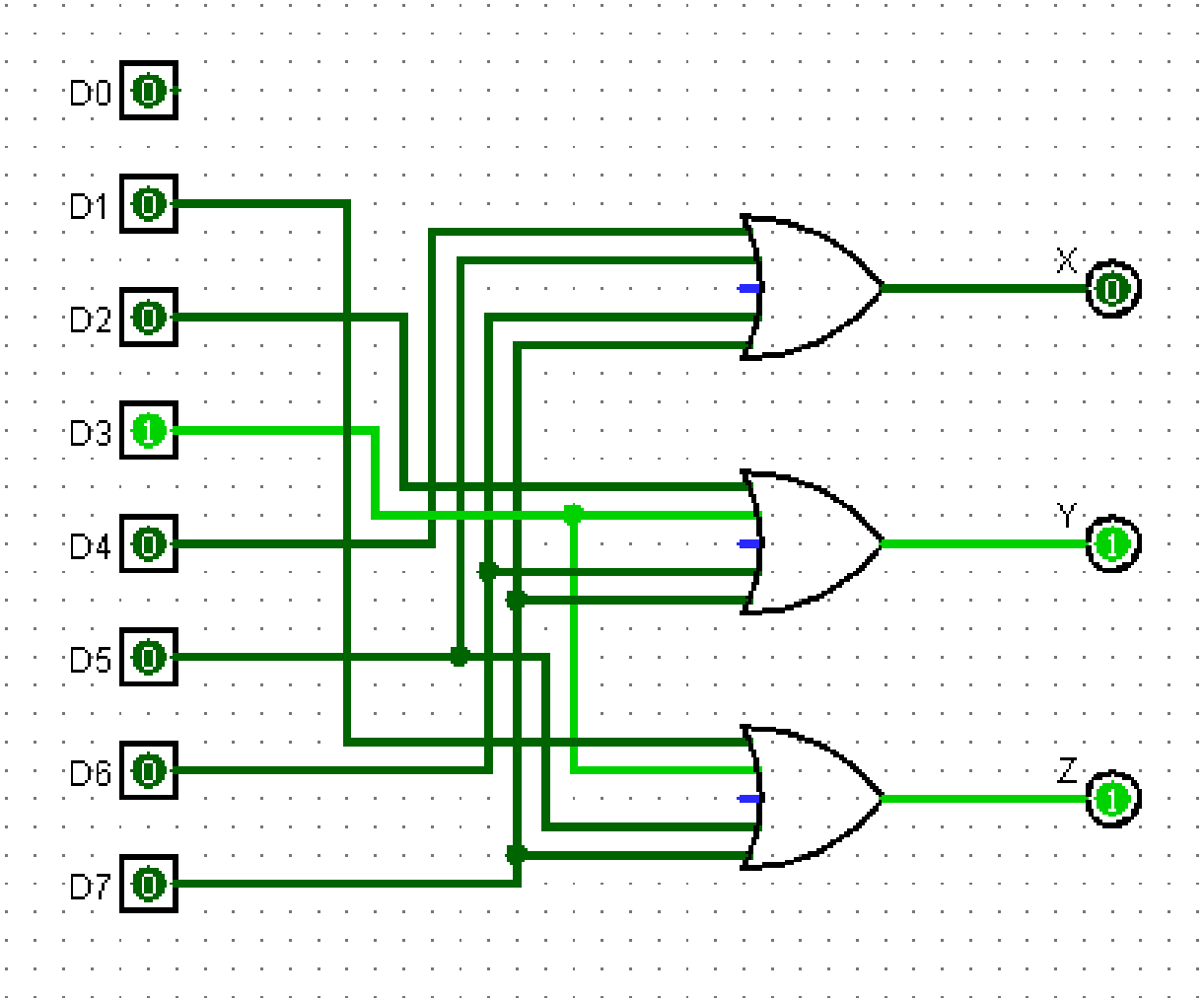

香港科技大學
THE HONG KONG UNIVERSITY OF SCIENCE AND TECHNOLOGY

Extra Exercise: Multiplexor

- A multiplexor is a devices that given the control signal, selects one of the inputs to be forwarded to the output. The following figure shows a 4-input multiplexor.
- 4-to-1 multiplexor

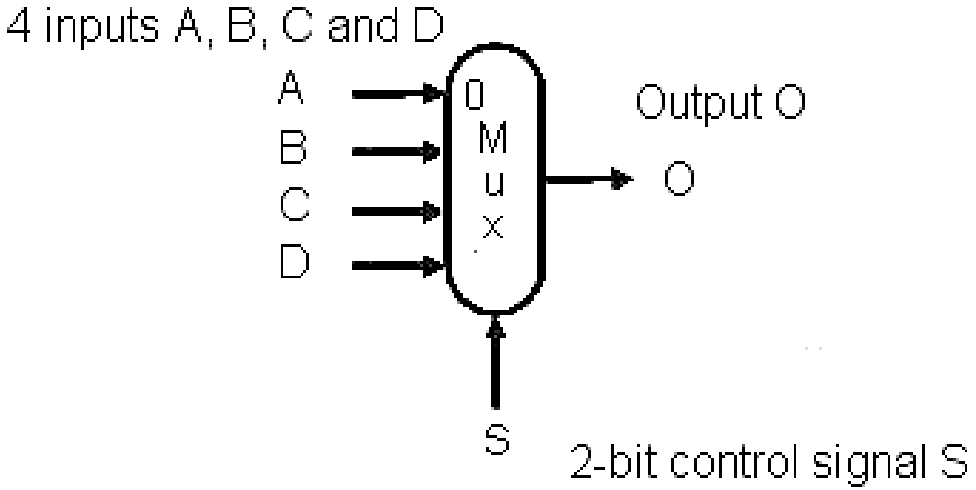

香港科技大學
THE HONG KONG UNIVERSITY OF SCIENCE AND TECHNOLOGY

Questions

- If the inputs A/B are 32-bit in width, what is the data width of the Output O?
- What is the maximum number of inputs if the control signal is 10-bit in width?
- What is the bit-width of the control signal for the multiplexor if there are 9 inputs?

香港科技大學
THE HONG KONG UNIVERSITY OF SCIENCE AND TECHNOLOGY