TUTORIAL 2 SEQUENTIAL LOGIC CIRCUIT

Overview

- **We will review the following concept in this tutorial:**
- **Sequential logic circuits**
  - Have memory
  - Output depends on the current input(s) and value stored in the memory (called *state*)
- **Clock**
- **Timing diagram**
  - To describe the behavior of the circuit along time

- **Work with a few practical examples**
  - S-R latch and D latch with NAND gates
  - Edge-triggered D flip-flop
  - Register
  - Binary counter

香港科技大學
THE HONG KONG UNIVERSITY OF SCIENCE AND TECHNOLOGY

Clock

- A **clock** acts as a global signal that gives all the components in the system an indication of time.
- Clock is used in sequential logic to decide and co-ordinate state updates.
- A clock signal has three important key words that you need to know:

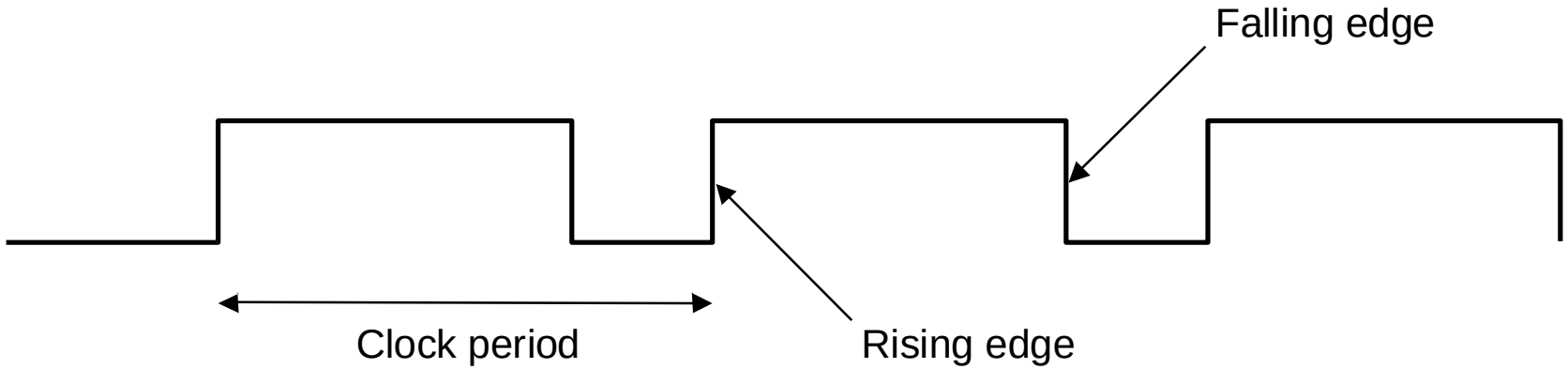

S-R Latch with NAND Gates

- **S-R latch** (Set-Reset latch) can also be implemented by **NAND** gates
- **Un-clocked** memory element (**Asynchronous** device)

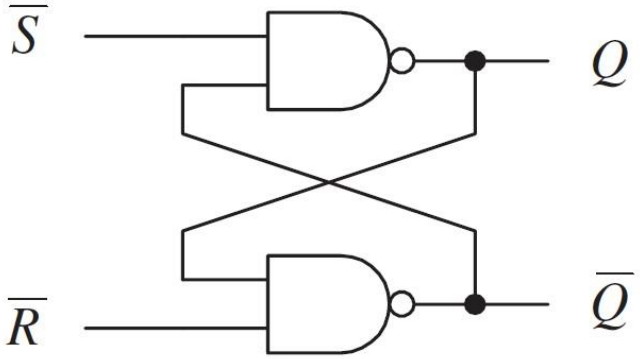

$\bar{S}$	$\bar{R}$	Action on Q
0	0	
0	1	
1	0	
1	1	

- **Note**
  - S-R NAND latch is an inverted version of S-R NOR latch. Thus, the truth table is also inverted.
  - The input signal is effective when it is de-asserted.

香港科技大學
THE HONG KONG UNIVERSITY OF SCIENCE AND TECHNOLOGY

S-R Latch with NAND Gates

- **S-R latch** (Set-Reset latch) can also be implemented by **NAND** gates
- **Un-clocked** memory element (**Asynchronous** device)

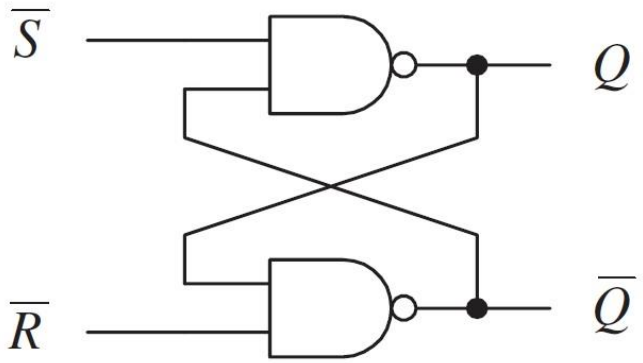

$\overline{S}$	R$\overline{R}$	Action on Q
0	0	forbidden
0	1	Q = 1
1	0	Q = 0
1	1	latched

- **Note**
  - S-R NAND latch is an inverted version of S-R NOR latch. Thus, the truth table is also inverted.
  - The input signal is effective when it is de-asserted.

香港科技大學
THE HONG KONG UNIVERSITY OF SCIENCE AND TECHNOLOGY

A Clocked Memory Element: D-latch

- The value stored in a D-latch can be updated iff the clock is asserted (i.e. C=1).
- An implementation using NOR gates is shown below. S-R latch (Set-Reset latch) can also be implemented NAND gates

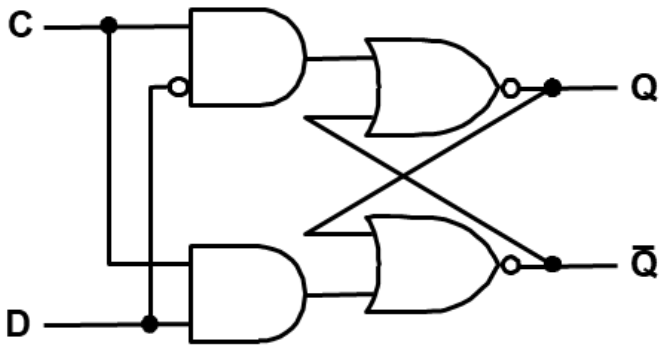

C (Clock)	D	Action on Q
0	0	
0	1	
1	0	
1	1	

- **Note**
  - the S-R latch on the right part of the D-latch circuit.
  - From the circuit, argue whether it is possible to do update when the clock is not asserted?

香港科技大學
THE HONG KONG UNIVERSITY OF SCIENCE AND TECHNOLOGY

A Clocked Memory Element: D-latch

- The value stored in a D-latch can be updated iff the clock is asserted (i.e. C=1).
- An implementation using NOR gates is shown below. S-R latch (Set-Reset latch) can also be implemented NAND gates

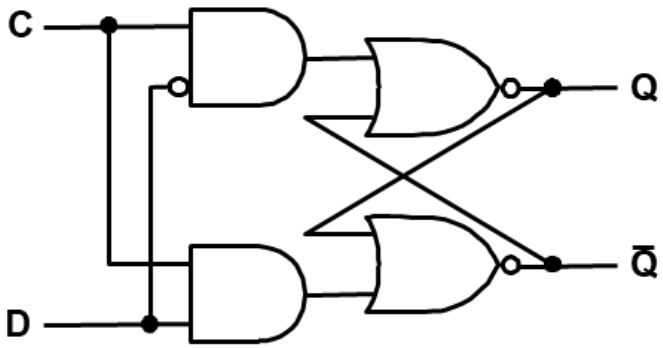

C (Clock)	D	Action on Q
0	0	Nothing changed
0	1	Nothing changed
1	0	Q = 0
1	1	Q = 1

- **Note**
  - the S-R latch on the right part of the D-latch circuit.
  - From the circuit, argue whether it is possible to do update when the clock is not asserted?

香港科技大學
THE HONG KONG UNIVERSITY OF SCIENCE AND TECHNOLOGY

D-latch with NAND Gates

- **D latch can also be implemented with NAND gates as shown in below figure.**
  - Clocked memory element (Synchronous device)

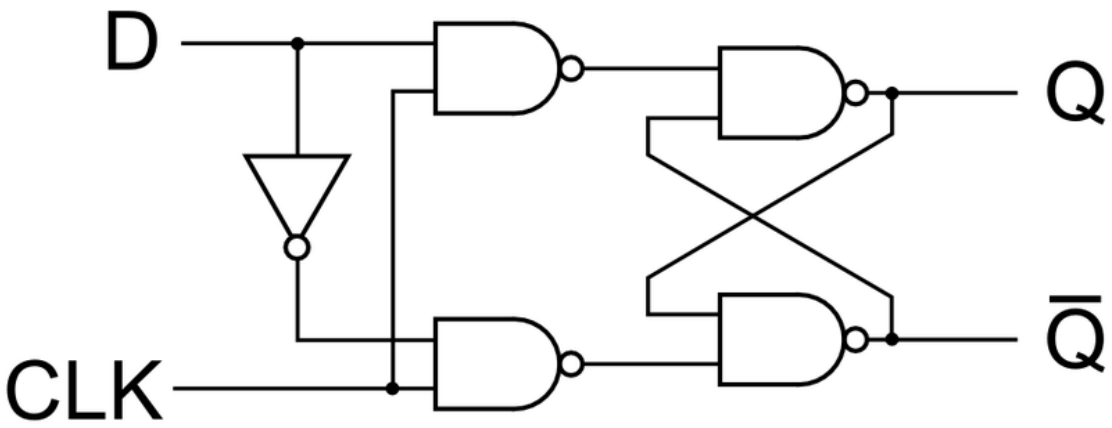

C (Clock)	D	Action on Q
0	0	
0	1	
1	0	
1	1	

$$Q = (D\ nand\ C)\ nand\ \bar{Q}, \qquad \bar{Q} = (\bar{D}\ nand\ C)\ nand\ Q.$$

香港科技大學
THE HONG KONG UNIVERSITY OF SCIENCE AND TECHNOLOGY

D-latch with NAND Gates

- **D latch can also be implemented with NAND gates as shown in below figure.**
  - Clocked memory element (Synchronous device)

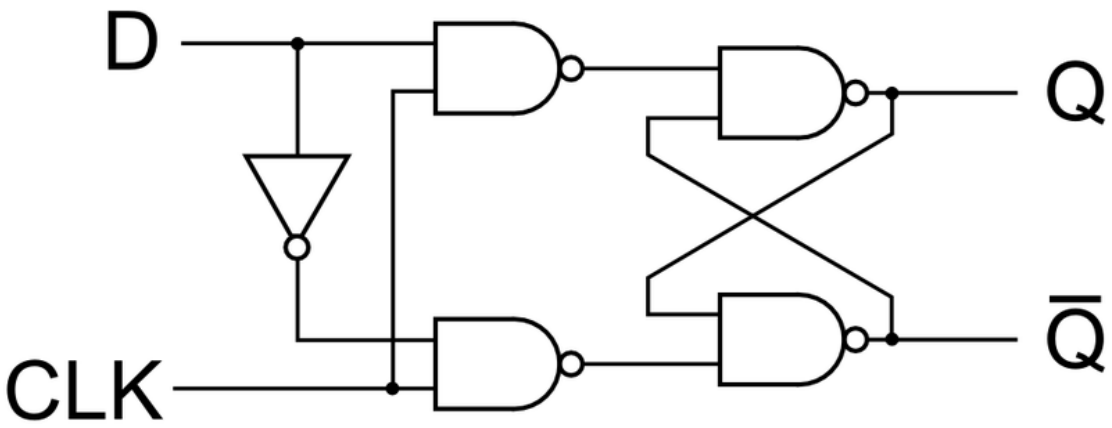

C (Clock)	D	Action on Q
0	0	Nothing changed
0	1	Nothing changed
1	0	Q = 0
1	1	Q = 1

$$Q = (D\ nand\ C)\ nand\ \bar{Q}, \qquad \bar{Q} = (\bar{D}\ nand\ C)\ nand\ Q.$$

香港科技大學
THE HONG KONG UNIVERSITY OF SCIENCE AND TECHNOLOGY

D Flip-flop

- **A D Flip-flop can be updated only on a falling/rising clock edge.**
  - There are many ways to create a D flip flop, the figure below (from the lecture notes) shows a D flip flop created from two D latches.

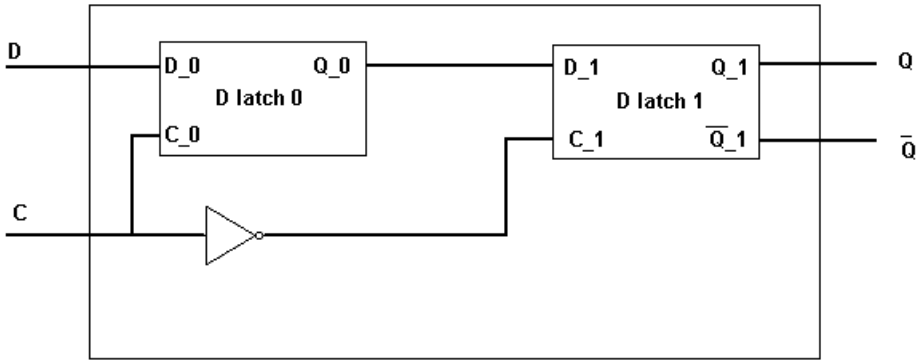

- **This flip flop can be updated in a falling edge or in a rising edge?**

香港科技大學
THE HONG KONG UNIVERSITY OF SCIENCE AND TECHNOLOGY

Exercise – Edge-triggered D flip-flop

- **Given the input (D) and clock transitions (Clk) of the Figure below, determine the output of the device if it is a:**
  - (a) Falling-edge-triggered D flip-flop.
  - (b) Rising-edge-triggered D flip-flop.

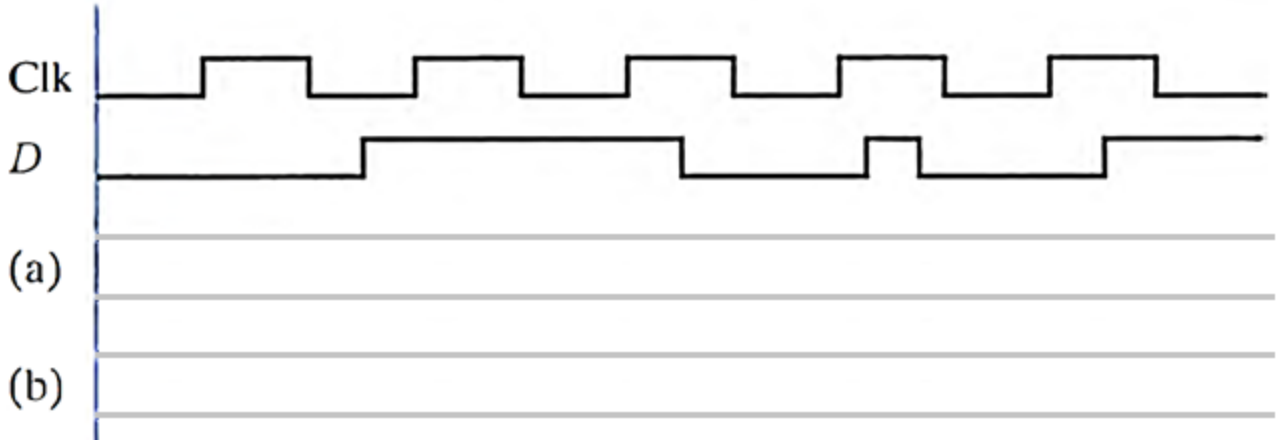

香港科技大學
THE HONG KONG UNIVERSITY OF SCIENCE AND TECHNOLOGY

Solution

- Falling-edge-triggered

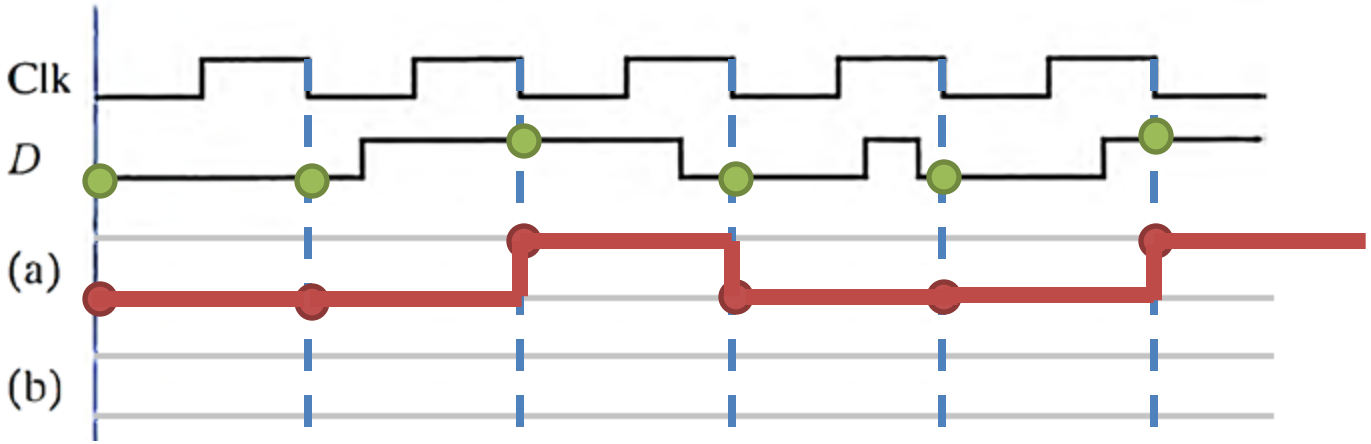

- Rising-edge-triggered

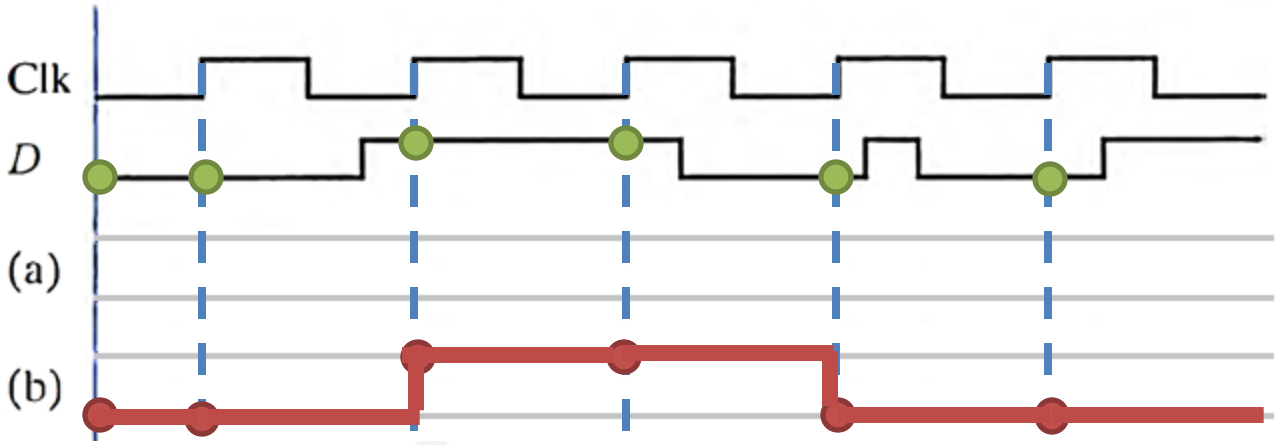

香港科技大學
THE HONG KONG UNIVERSITY OF SCIENCE AND TECHNOLOGY

Register File

- A **register file** is a piece of hardware that allows reading from and writing to the desired registers.
- It is usually implemented by way of fast static RAMs with multiple ports.

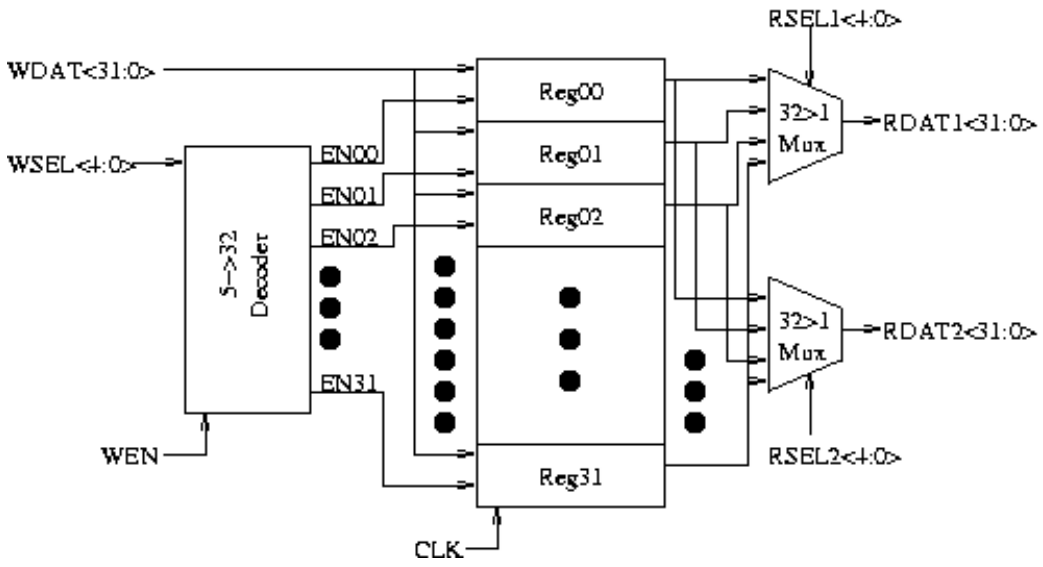

- How do you read from a register (what are the inputs)?
- How do you write to a register (what are the inputs)?

Exercise - Synchronous Binary Counters

- **Synchronous digital circuit – Binary counter with 2-bit memory**
  - Only has clock signal as input
  - At each clock pulse, the counter takes up a new state and thus goes through a specific count sequence.
  - The block diagram, structure and state transition diagram of a two-bit binary counter is of the following form.
  - Design the state sequencing logic which consists of the two combinational circuits labelled Circuit 1 and Circuit 2.

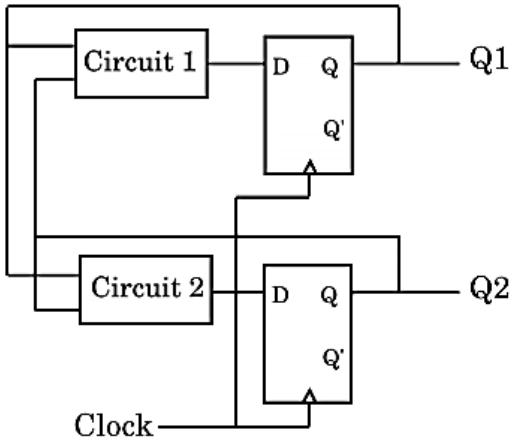

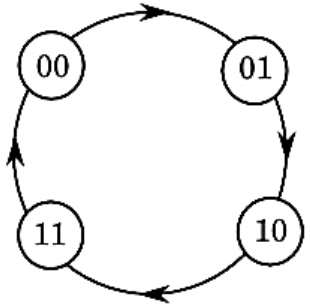

香港科技大學
THE HONG KONG UNIVERSITY OF SCIENCE AND TECHNOLOGY

Truth Table and K-map

- Step 1: Construct the truth table (or transition table)

- Step 2: Construct the corresponding K-map

香港科技大學
THE HONG KONG UNIVERSITY OF SCIENCE AND TECHNOLOGY

Truth Table and K-map

- **Step 1: Construct the truth table (or transition table)**

Inputs (t_n)		Outputs (t_{n+1})	
Q_1	Q_2	D_1	D_2
0	0	0	1
0	1	1	0
1	0	1	1
1	1	0	0

- **Step 2: Construct the corresponding K-map**

		Q2	
		0	1
Q1	0	0	1
	1	1	0

D1

		Q2	
		0	1
Q1	0	1	0
	1	1	0

D2

香港科技大學
THE HONG KONG UNIVERSITY OF SCIENCE AND TECHNOLOGY

Truth Table and K-map

- Step 3: Simplified logic function

- Step 4: Circuit design

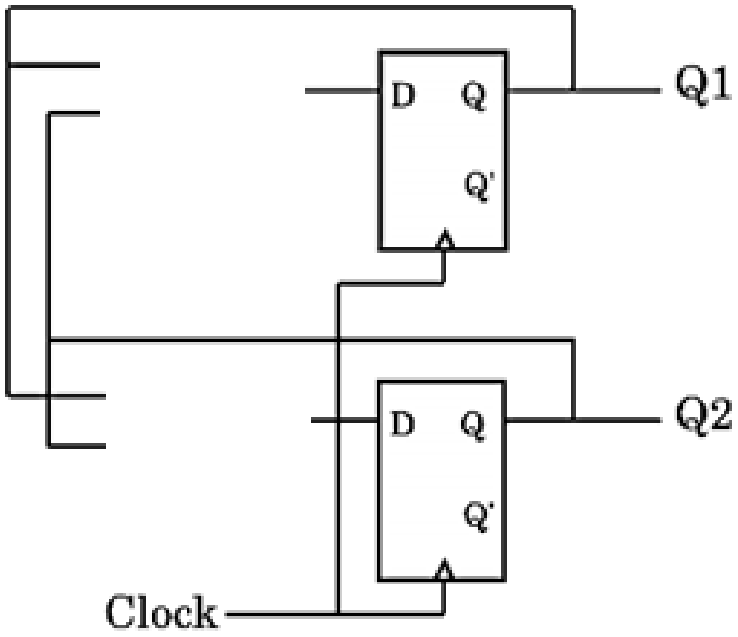

Truth Table and K-map
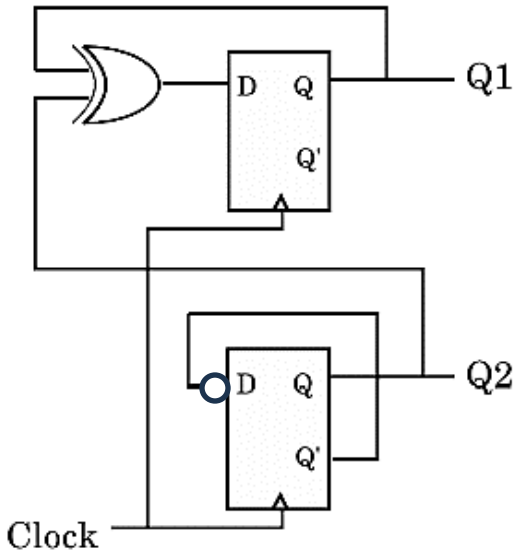
- **Step 3: Simplified logic function**
  - $D_1 = Q_1\overline{Q_2} + \overline{Q_1}Q_2 = Q_1 \oplus Q_2$
  - $D_2 = \overline{Q_2}$
- **Step 4: Circuit design**