TUTORIAL 8 NESTED PROCEDURE CALL AND ARITHMETIC LOGIC UNIT

Overview

- **We will review the following concept in this tutorial:**
- **Nested procedure**
- **Recursion (nested procedure calling itself)**
  - Register convention
- **1-bit Arithmetic Logic Unit (ALU)**
  - add, sub, and, or
- **32-bit ALU**
  - add, sub, and, or, beq, slt

香港科技大學
THE HONG KONG UNIVERSITY OF SCIENCE AND TECHNOLOGY

`jr` and `jal` Instructions for Procedure Call

Jump Registers	Usage: jr <Register>
Jump to the address contained in register.	
Jump and Link	Usage: jal <target>
Jumps to the calculated address and stores the return address in $ra Operation: Update PC	

香港科技大學
THE HONG KONG UNIVERSITY OF SCIENCE AND TECHNOLOGY

Warm up exercise

- **Explain the problem of this MIPS program, and suggest the solution.**

```
.text
.globl main
main:
        jal calculate
        addi $s0, $v0, 0
        li $v0, 10
        syscall
calculate:
        addi $a0, $zero, 1
        addi $a1, $zero, 2
        jal add_two_numbers
        jr $ra
add_two_numbers:
        add $v0, $a0, $a1
        jr $ra
```


香港科技大學
THE HONG KONG UNIVERSITY OF SCIENCE AND TECHNOLOGY

Nested Procedure Call Example: `print_even`

```
# print even numbers in [1, 10]

.text #text segment
.globl main
#-----------------------------------------------------------
# void main()
# for (int i=0; i<10; i++)
#       print_even(i);
# $s0: i
main: # caller-callee pair: main and print_even
        addi $s0, $zero, 1      # $s0 is i
loop:
        slti $t0, $s0, 10       # if (i < 10) iterate
        beq $t0, $zero, exit
        add $a0, $s0, $zero     # print_even(i)
        jal print_even
        addi $s0, $s0, 1        # i++
        j loop
exit:
        li $v0, 10              # exit
        syscall
#-----------------------------------------------------------
```


香港科技大學
THE HONG KONG UNIVERSITY OF SCIENCE AND TECHNOLOGY

Nested Procedure Call Example: `print_even`

```
#-----------------------------------------------------------
# void print_even(i)
# $a0: i

# MIPS convention: $s registers should be preserved
# It's callee's responsibility to perserve any $s registers it's going to use
# If every callee does this, the all callers can feel safe to put their important data in $s registers
# $s register content remains unchanged before and after the procedure call

# $ra should also be preserved if there's nested procedure call

print_even: # caller-callee pair: print_even and is_even
        addi $sp, $sp, -4       # push $ra
        sw $ra, 0($sp)
        addi $sp, $sp, -4       # push $s0
        sw $s0, 0($sp)

        add $s0, $a0, $zero     # backup input argument i to preserved register $s0
        jal is_even             # is_even(i), returns 1 if i is even, 0 otherwise
        beq $v0, $zero, print_even_end
        add $a0, $s0, $zero     # print i if it's even
        li $v0, 1
        syscall
print_even_end:
        lw $s0, 0($sp)          # pop $s0
        lw $ra, 4($sp)          # pop $ra
        addi $sp, $sp, 8
        jr $ra                  # return
#-----------------------------------------------------------
```

Nested Procedure Call Example: `print_even`

```
#-----------------------------------------------------------
# bool is_even(i)
# $a0: i
# $v0: return value
is_even:
        addi $sp, $sp, -4       # push $ra (optional since is_even is a leaf procedure)
        sw $ra, 0($sp)
        addi $v0, $zero, 0
        andi $t0, $a0, 1        # $t0 is 1 if i is odd, 0 if i is even
        bne $t0, $zero, is_even_end
        addi $v0, $zero, 1      # $a0 is even
is_even_end:
        lw $ra, 0($sp)
        addi $sp, $sp, 4
        jr $ra
#-----------------------------------------------------------
```


香港科技大學
THE HONG KONG UNIVERSITY OF SCIENCE AND TECHNOLOGY

Recursion Example: `factorial`

```
# ---------------------------------------------------------------------------
main: # caller-callee pair: main() and factorial()
    # print prompt
    li        $v0, 4            # pseudo instruction
    la        $a0, prompt       # pseudo instruction
    syscall                     # system call #4 - print string
    # read x
    li        $v0, 5            # system call #5 - read int
    syscall                     #x is returned in $v0
    # call factorial()
    move      $a0, $v0          # pseudo instruction, $a0 = n
    jal      factorial          # call factorial(n)
    move      $s0, $v0          # $vo = factorial(n), save it in $s0
    # print prompt
    li        $v0, 4
    la        $a0, result
    syscall
    # print result
    move      $a0, $s0          # $a0 = $s0 factorial(n)
    li        $v0, 1            # system call #1 - print int saved in $a0
    syscall                     # execute
    # exit
    li        $v0, 10           # system call #10 - exit
    syscall
# ---------------------------------------------------------------------------
```


香港科技大學
THE HONG KONG UNIVERSITY OF SCIENCE AND TECHNOLOGY

Recursion Example: `factorial`

```
# ----------------------------------------------------------------------------
factorial: # caller-callee pair: factorial(n) and factorial(n-1)
        addi $sp, $sp, -4       #push $ra, factorial(n)'s duty as callee
        sw $ra, 0($sp)
base_case:
        bne $a0, $zero, recursive_case  # if n >= 1, goto recursive case
        addi $v0, $zero, 1              # base case, f(0) = 1
        j factorial_end
recursive_case:
# when factorial(n) calls factorial(n-1), $a0 will change from n to n-1
# but factorial(n) still needs to do n x factorial(n-1) after factorial(n-1) returns
# $a is not preserved in MIPS convention. So it's factorial(n) caller's repsonsibility to perserve it.
        addi $sp, $sp, -4       # push $a0 (to save value n), caller's role
        sw $a0, 0($sp)

        addi $a0, $a0, -1       # now $a0 = n-1
        jal factorial           # call factorial(n-1)
        # when factorial returns, f(n-1) is in $v0
        lw $a0, 0($sp)          # restores value n from stack, callee's role
        addi $sp, $sp, 4

        mult $a0, $v0   # f(n) = n * f(n-1), f(n-1) is in $v0, which is the return value of f(n-1)
        mflo $v0        # now $v0 holds f(n), f(n) is going to be returned to main() in $v0
factorial_end:
        lw $ra, 0($sp)  # pop $ra, factorial(n)'s duty to restore preserved register(s)
        addi $sp, $sp, 4
        jr $ra
# ----------------------------------------------------------------------------
```

callee role

caller of fac(n-1)

caller of fac(n-1)

callee role

THE HONG KONG UNIVERSITY OF SCIENCE AND TECHNOLOGY

32-bit MIPS Arithmetic and Logic Unit (ALU)

- **First, build 1-bit ALU**
  - 1-bit logic unit (AND and OR)
  - 1-bit full adder (ADD)
  - Combine the above and build 1-bit ALU (ADD, SUB, AND, OR)
- **Then, build 32-bit ALU by connecting 32 of 1-bit ALU**
  - Connect ALU_0 to ALU_{31} with ripple carry structure
  - ALU_{31} works on MSb (sign bit) so it's a bit different from ALU_0 to ALU_{30}
  - Further add support to SLT and BEQ

香港科技大學
THE HONG KONG UNIVERSITY OF SCIENCE AND TECHNOLOGY

1-bit ALU

- 1-bit ALU for bit 0 to bit 30

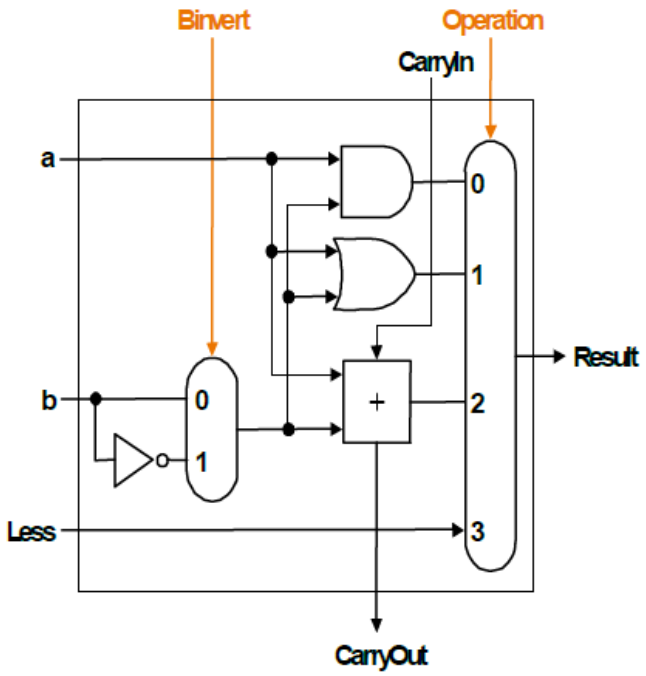

- 1-bit ALU for the MSb (ALU_{31})

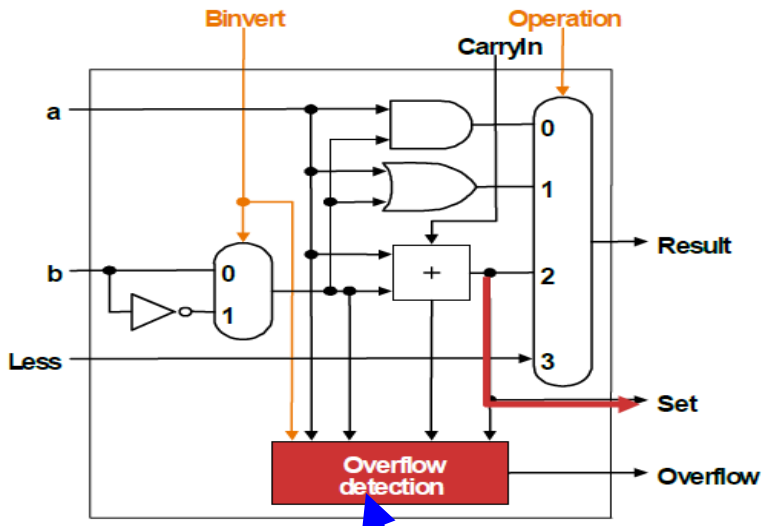

Overflow conditions

Operation	Sign bit of A	Sign bit of B	Sign bit of Result
A + B	0	0	1
A + B	1	1	0
A - B	0	1	1
A - B	1	0	0

32-bit ALU with support to SLT

- An extended 32-bit ALU (supports SLT) can be formed by connecting 32 1-bit ALUs as follows. Note the 0's at the "`Less`" input for ALU1-ALU31, note also the `set` signal from ALU_{31} to ALU_0.

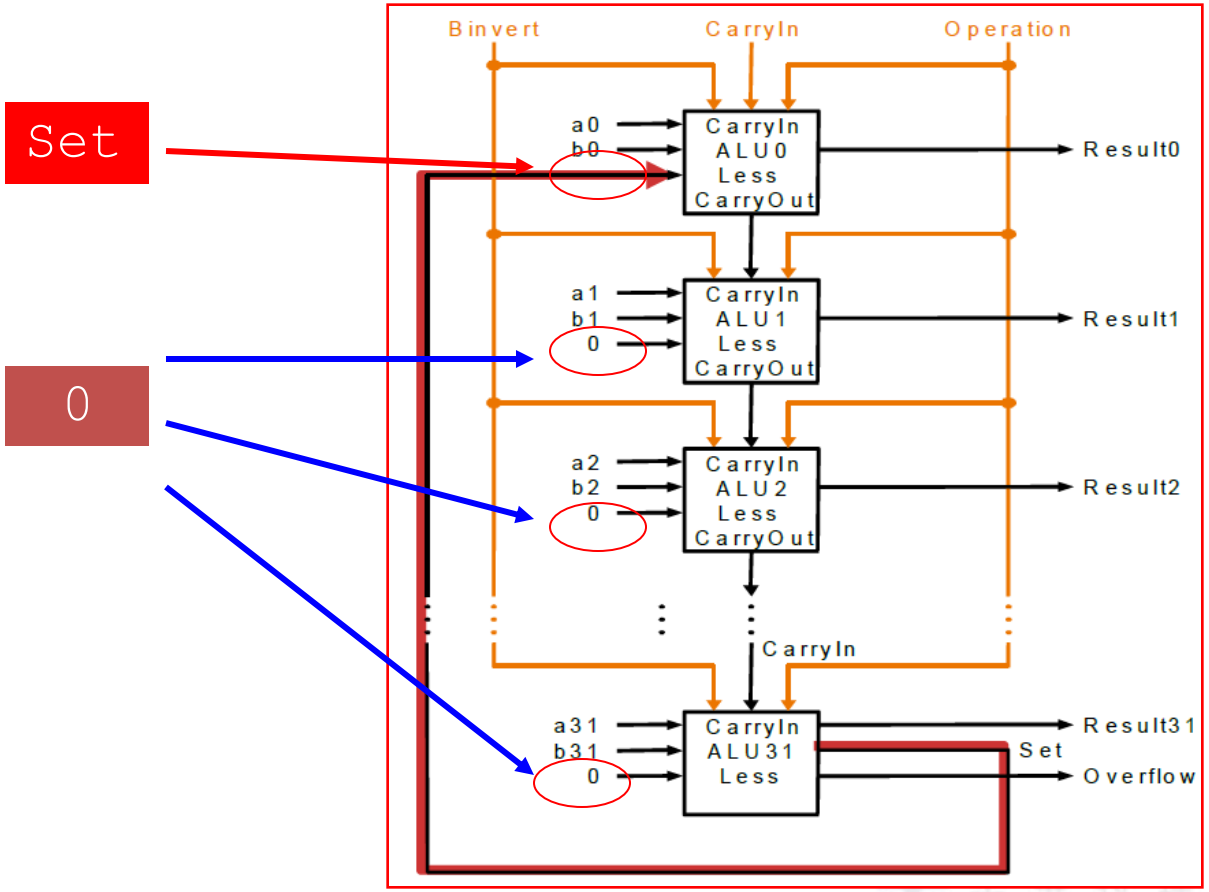

香港科技大學
THE HONG KONG UNIVERSITY OF SCIENCE AND TECHNOLOGY

Exercise 1

- **Some argue that the control signals Binvert and CarryIn of the bit-0 ALU can be combined into one control signal. Justify this claim (refer to the ALU diagrams on slide 11 whenever necessary).**

香港科技大學
THE HONG KONG UNIVERSITY OF SCIENCE AND TECHNOLOGY

Exercise 2

- Refer to the previous ALU slides, explain how SLT operation can be performed. State the values for the control signals `Binvert`, `CarryIn` and `Operation`.

香港科技大學
THE HONG KONG UNIVERSITY OF SCIENCE AND TECHNOLOGY

Exercise 3

Refer to the previous ALU slides, derive the logic expression in the Sum of Product form (SoP) for overflow conditions.

1)	overflow	Binvert=	a3=	b3=	set=
		Binvert=	a3=	b3=	set=
2)	overflow	Binvert=	a3=	b3=	set=
		Binvert=	a3=	b3=	set=

Operation	Sign bit of A	Sign bit of B	Sign bit of Result
A + B	0	0	1
A + B	1	1	0
A - B	0	1	1
A - B	1	0	0

The corresponding SoP is:

香港科技大學
THE HONG KONG UNIVERSITY OF SCIENCE AND TECHNOLOGY

Exercise 4
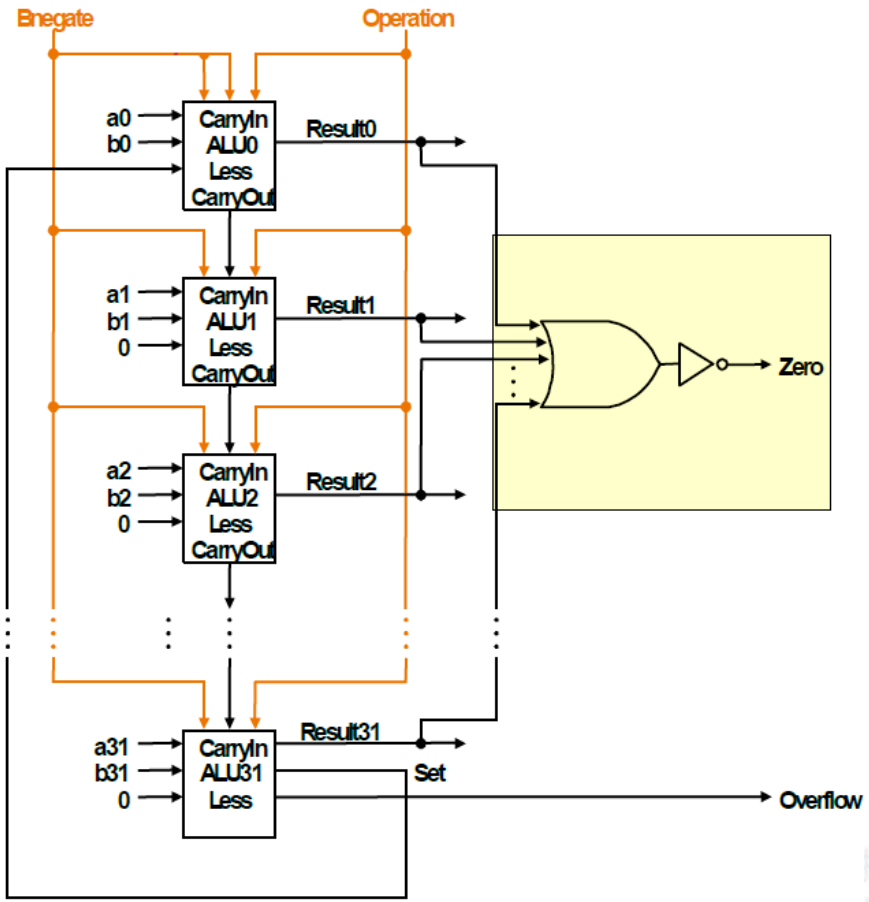
- Refer to the modified 32-bit ALU below, explain how the condition `A==B` is detected. State the values for the control signals `Bnegate` and `Operation`