TUTORIAL 11 THE PIPELINED PROCESSOR

Overview

- **We will review the following concept in this tutorial:**
- **MIPS pipeline datapath and control (ideal case)**
  - IF, DE, EXE, MEM, WB stages
  - Inter-stage registers
- **Pipeline hazards**
  - Structural hazards, data hazards and control hazards
- **Identification and solution for hazards**
  - Forwarding and pipeline stalls
  - Code re-ordering

香港科技大學
THE HONG KONG UNIVERSITY OF SCIENCE AND TECHNOLOGY

MIPS Pipeline Stages

- **Execution of each instruction is broken into <u>5 stages</u>: (in the order of execution)**
  - **IF** : Fetch the instruction from memory
  - **ID** : Instruction decode & register read
  - **EX** : Perform ALU operation
  - **MEM** : Memory access (if necessary)
  - **WB** : Write result back to register
- **Each stage uses a <u>different hardware unit</u> and takes <u>one clock cycle</u> to complete.**
- **Instructions can co-exist in the datapath if all of them are in different stages of execution from one another**

香港科技大學
THE HONG KONG UNIVERSITY OF SCIENCE AND TECHNOLOGY

Pipeline Registers

- Additional **pipeline registers** are needed
- Located **between the stages, i.e. IF/ID, ID/EX, EX/MEM, MEM/WB**
- Hold information produced in the previous cycle

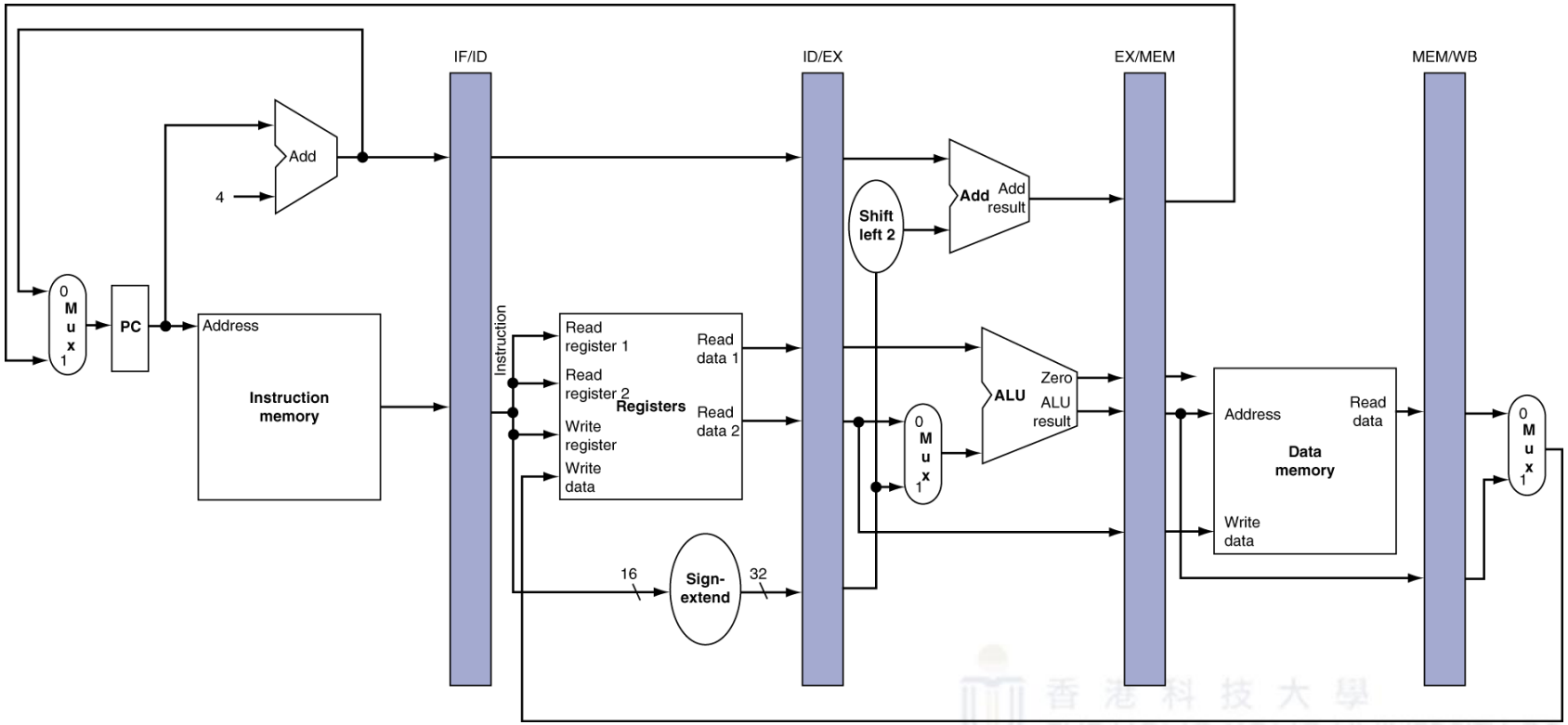

Multi-clock-cycle pipeline diagram : traditional view

- The following diagram shows the execution of **a series of instructions** in the ideal pipeline (no hazards)

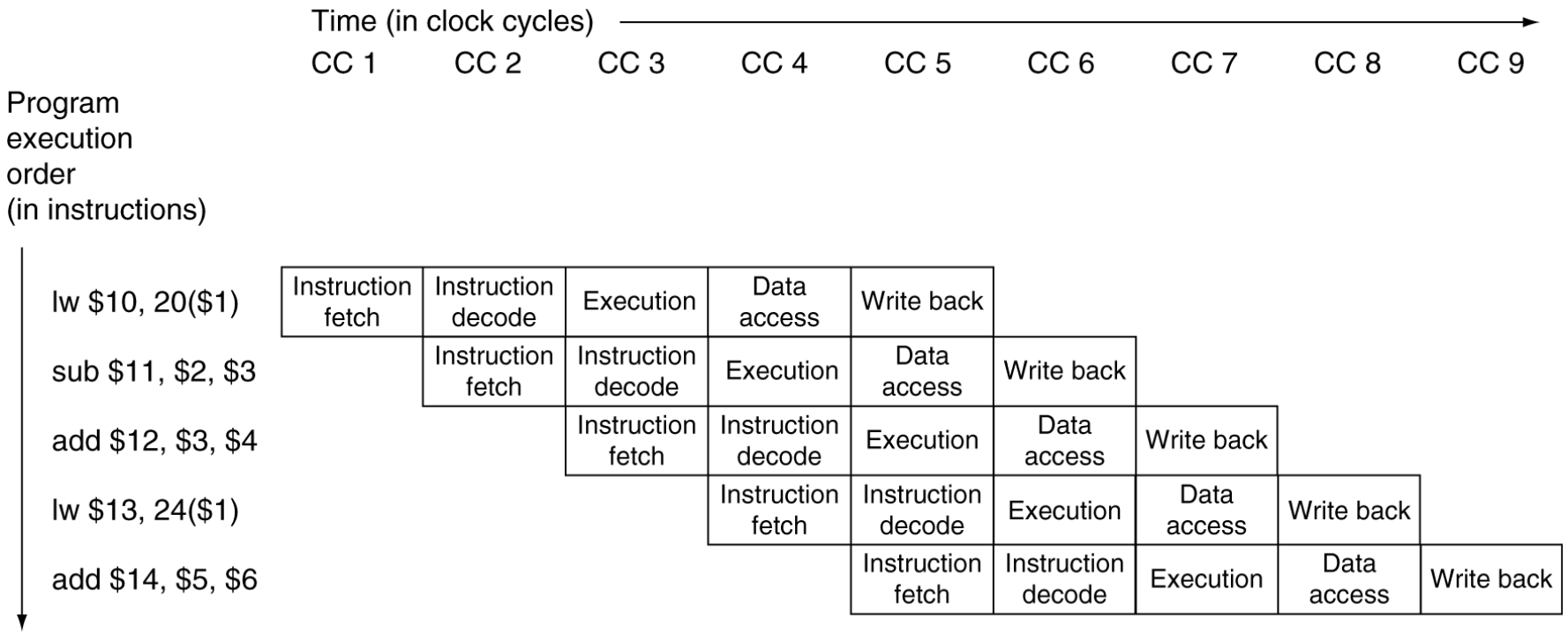

Multi-clock-cycle pipeline diagram: graphical view

- The multi-clock-cycle form showing the resource usage.

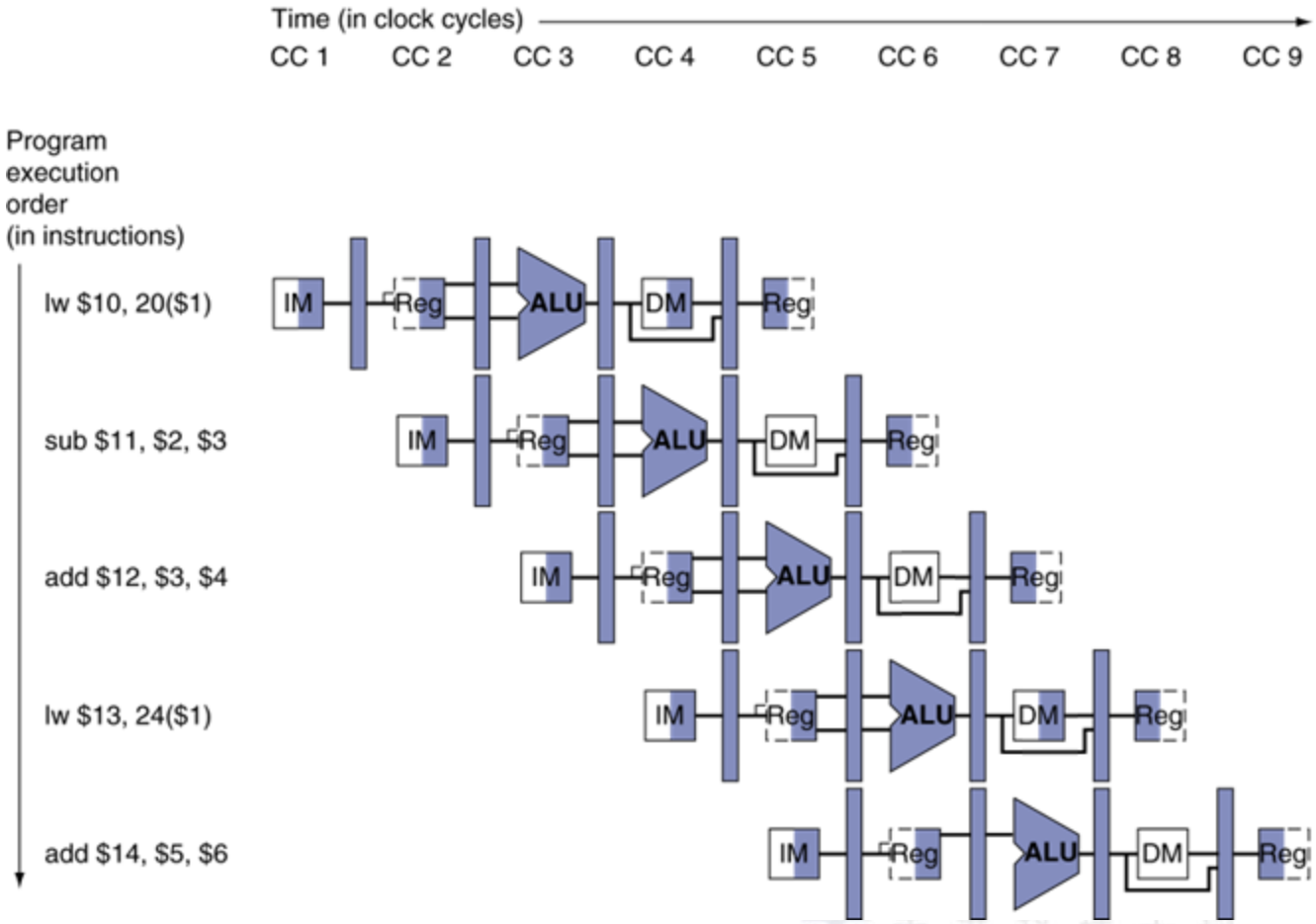

The Corrected Datapath for lw

- To solve this problem: the "write register" information is forwarded from the MEM/WB pipeline registers.

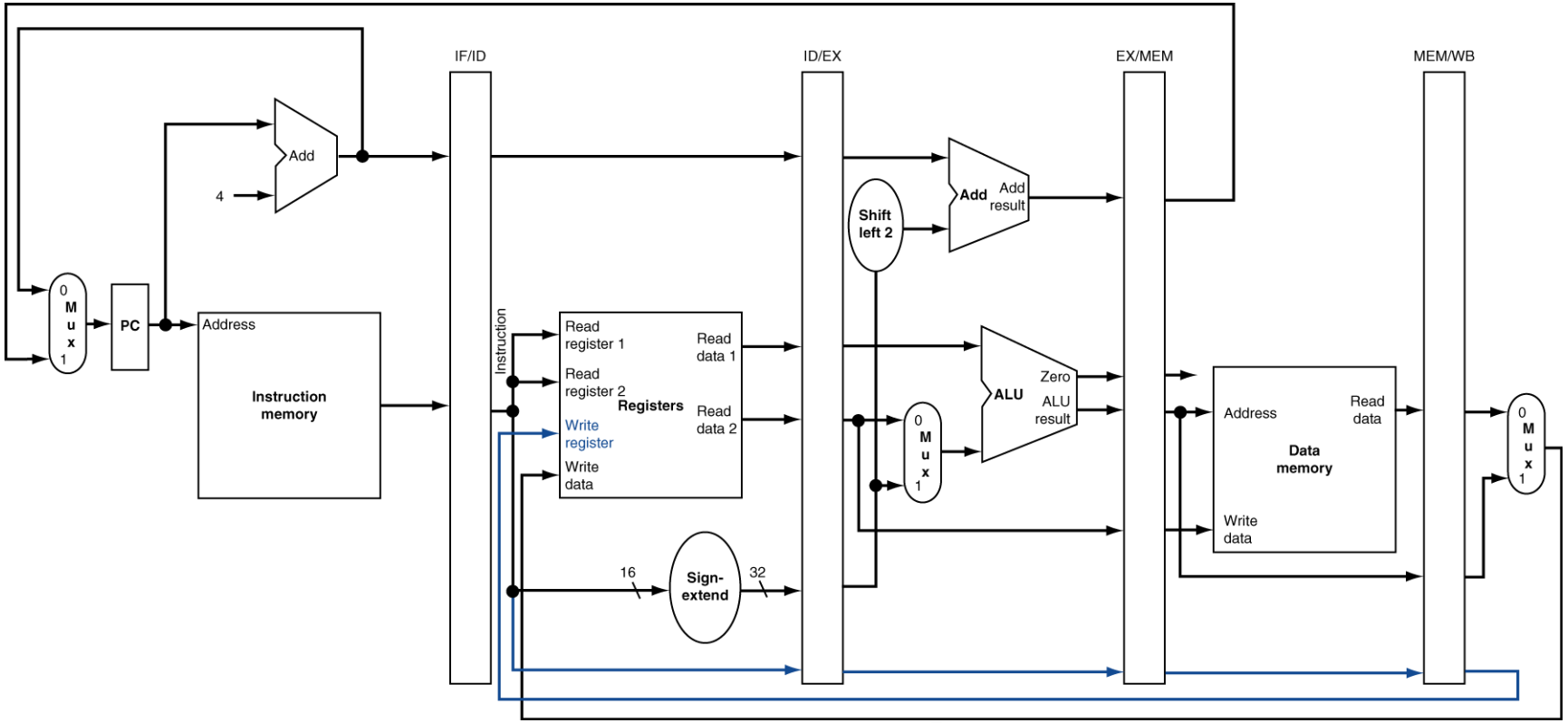

Pipeline Hazards

- **Hazards are situations in pipelining when the next instruction cannot be executed in the following clock cycle.**

- **Three types of pipelined hazards**
  - **Structural hazards:** A required resource is busy
    - Already solved in modern processor
  - **Data hazards:** Need to wait for previous instruction to complete its data read/write
  - **Control hazards:** Deciding on control action depends on previous instruction

- **Hazards can always be resolved by waiting. But this slows down the pipeline.**

香港科技大學
THE HONG KONG UNIVERSITY OF SCIENCE AND TECHNOLOGY

Data Hazards in ALU Instructions

- **Consider this sequence:**

```
sub $2, $1,$3
and $12,$2,$5
or  $13,$6,$2
add $14,$2,$2
sw  $15,100($2)
```

- **We can resolve (some) hazards with forwarding**

香港科技大學
THE HONG KONG UNIVERSITY OF SCIENCE AND TECHNOLOGY

Dependencies and Forwarding

- From the figure the decision is simple (required "forwardings" are represented by the two red lines):

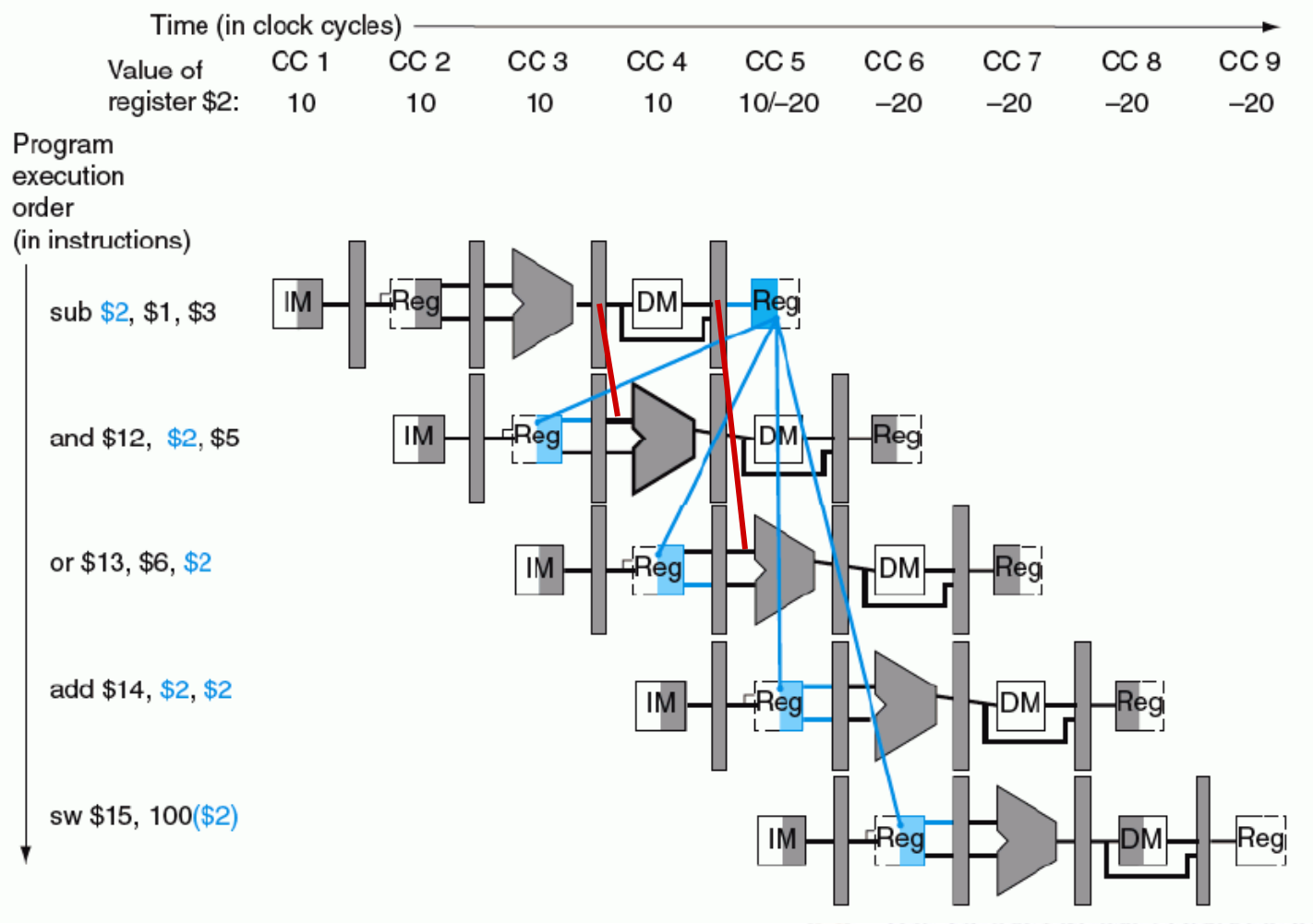

Forwarding Paths

- **Forwarding always takes place to EX stage**
  - Using two multiplexers to decide what is the input of operands A and B of the ALU
  - Forwarding control unit makes the decision

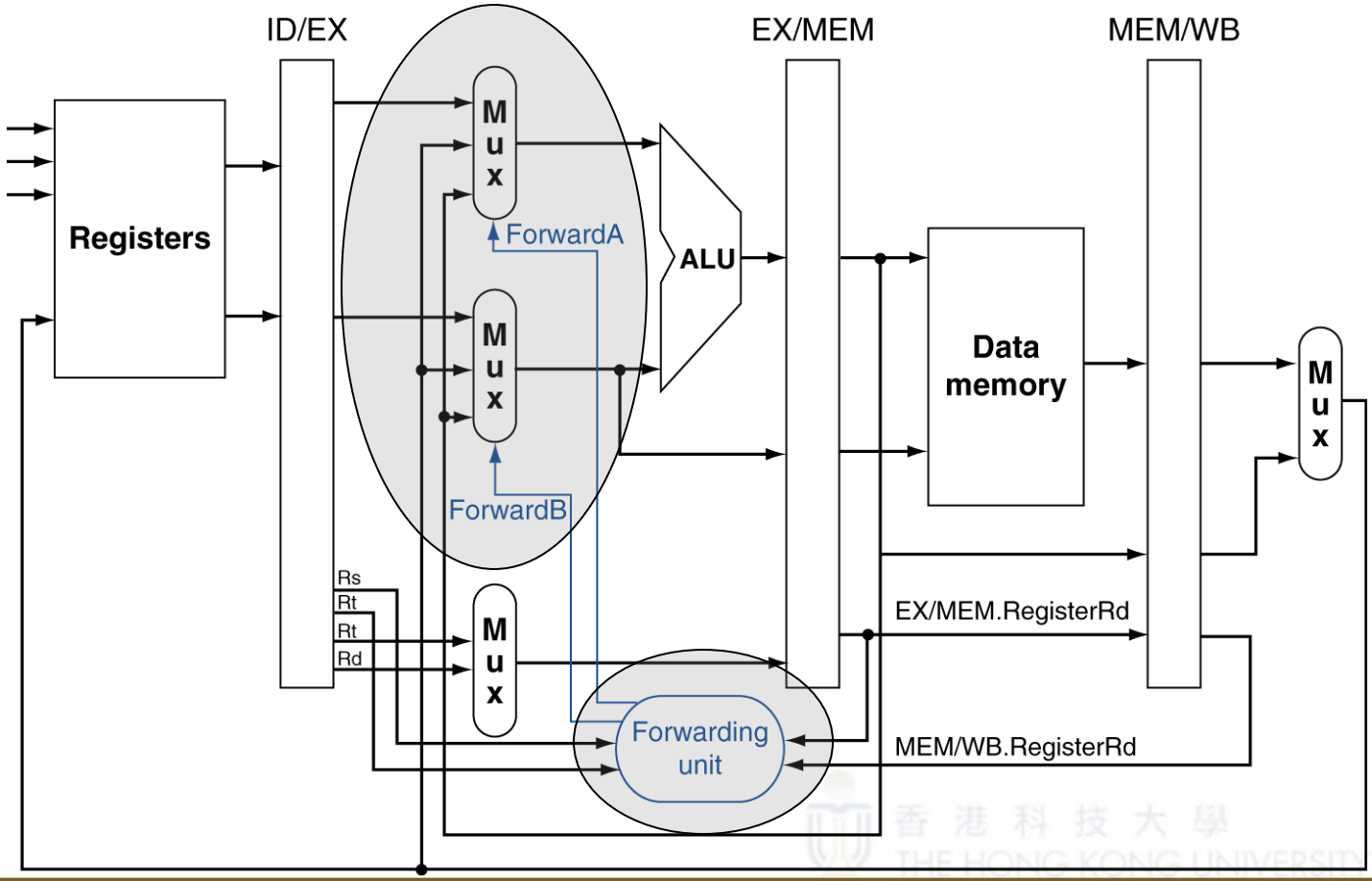

Load-Use Data Hazard

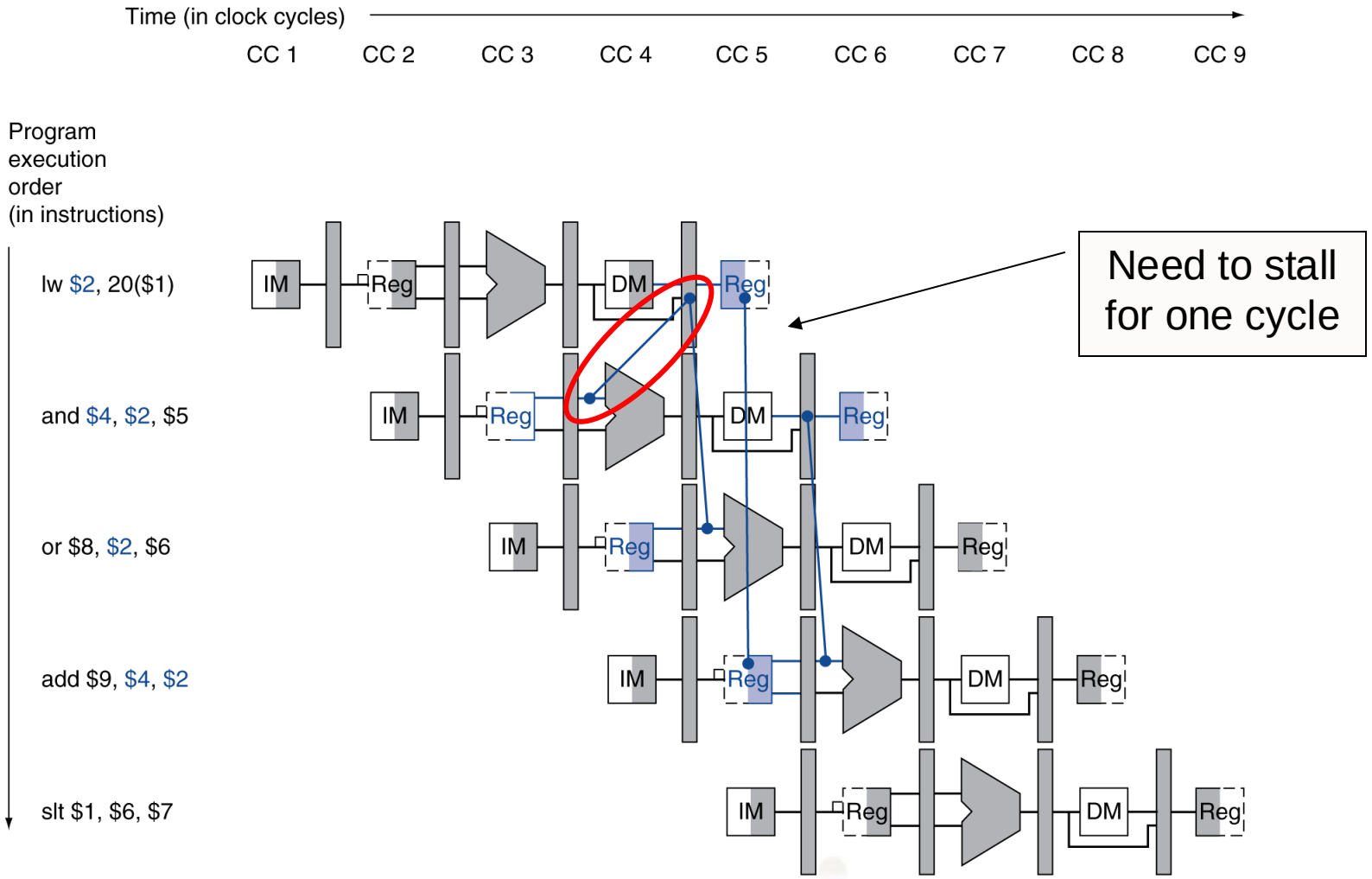

Stall/Bubble in the Pipeline

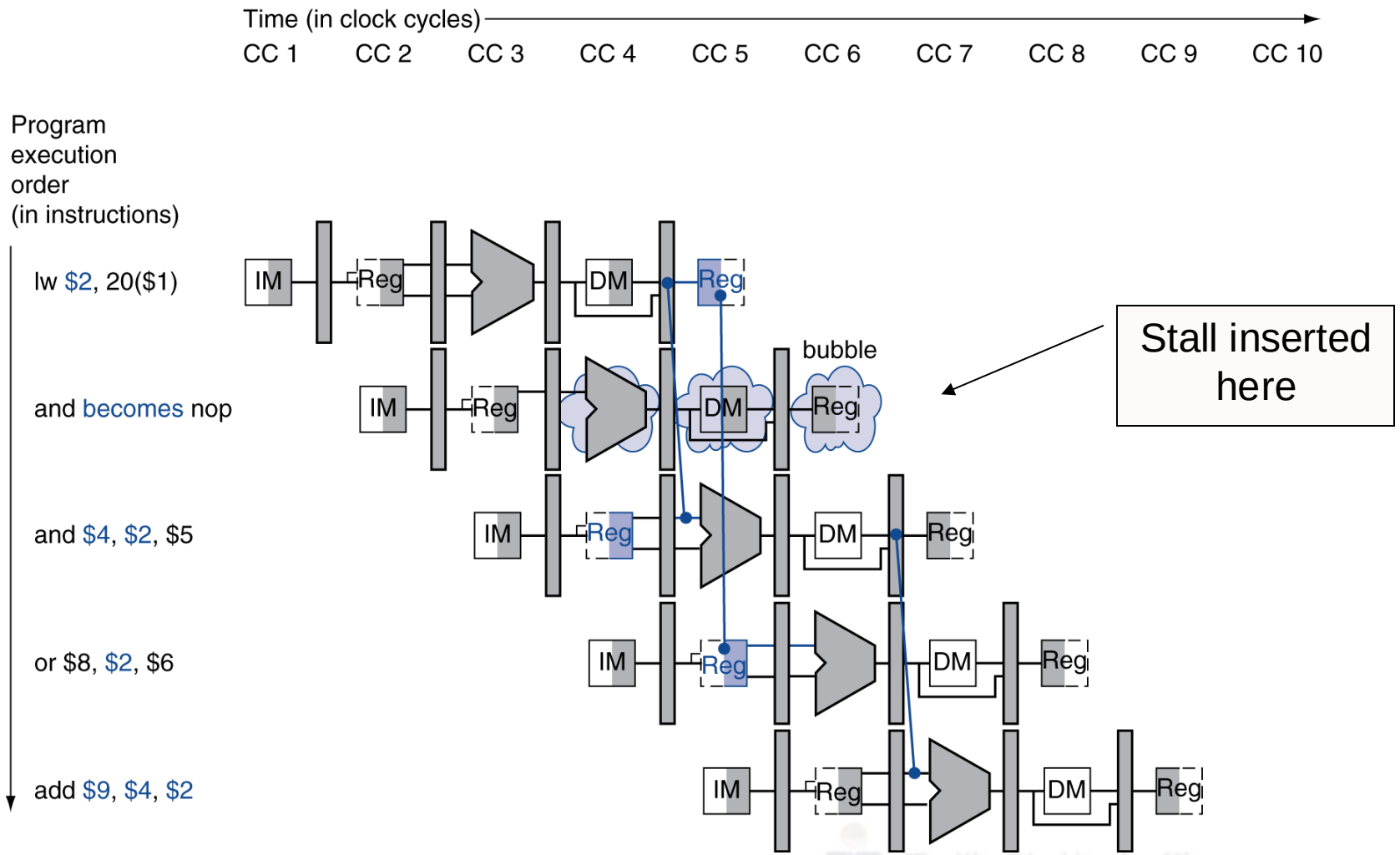

Stall/Bubble in the Pipeline (cont.)

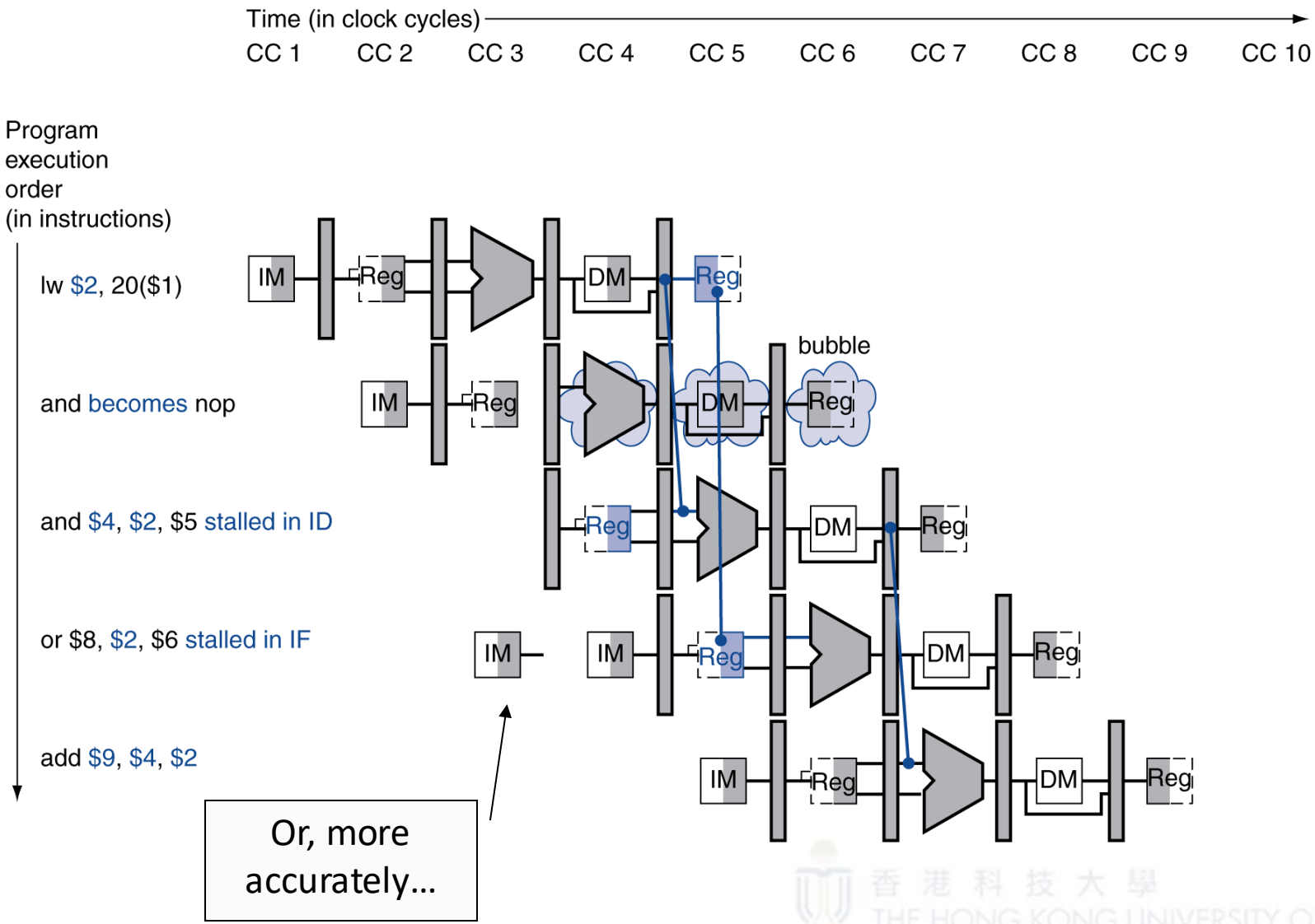

Exercise 1 Hazard Detection

- Identify if there are any pipeline hazards in each of the following sequences of MIPS instructions
- Specify the type of the hazard (if any) and explain its cause

a)
```
sw  $s1, 0($t0)
add $s2, $s0, $s1
add $s2, $s3, $s4
```

b)
```
lw  $s1, 0($t0)
add $s2, $s2, $s2
add $s2, $s3, $s3
```

c)
```
lw $s1, 0($t0)
lw $s2, 4($s1)
add $s2, $s3, $s3
```

d)
```
lw $s1, 0($t0)
sub $s3, $s4, $s2
bne $t0, $t1, target
add $s2, $s5, $s6
```

e)
```
add $s1,$s1,$2
add $s1,$s1,$3
add $s1,$s1,$s4
```

香港科技大學
THE HONG KONG UNIVERSITY OF SCIENCE AND TECHNOLOGY

Exercise 2 Pipeline Stalls

- Suppose the pipeline uses no forwarding, register writes in the first half of the cycle and register reads in the second half.
- Fill in the table below with the appropriate pipeline stages (IF, ID, EXE, MEM, WB) or bubbles (BUB).

`sub $s1, $t0, $t1`	IF	ID	EXE	MEM	WB							
`lw  $s2, 0($s1)`												
`add $s5, $s3, $s4`												
`add $s7, $s6, $s5`												

香港科技大學
THE HONG KONG UNIVERSITY OF SCIENCE AND TECHNOLOGY

Exercise 3 Forwarding

- Assume there are forwarding paths from the output of the ALU to the inputs of the ALU, and from memory output to inputs of the ALU
- Fill in the table below with the appropriate pipeline stages (IF, ID, EXE, MEM, WB) or bubbles (BUB). Mark the forwarding if it's used.

`sub $s1, $t0, $t1`	IF	ID	EXE	MEM	WB					
`add $s2, $s0, $s1`										
`add $s5, $s3, $s4`										
`add $s5, $s6, $s2`										

香港科技大學
THE HONG KONG UNIVERSITY OF SCIENCE AND TECHNOLOGY

Exercise 4 Code Re-ordering (self-practice)

- Some data dependency can be resolved by re-ordering the instructions
- For following sequence of instructions, calculate the total number of clock cycles needed with and without code re-ordering (assume no forwarding)

```
sub $s1, $t0, $t1
add $s2, $s0, $s1
add $s5, $s3, $s4
add $s5, $s6, $s6
```

香港科技大學
THE HONG KONG UNIVERSITY OF SCIENCE AND TECHNOLOGY

Exercise 5 Forwarding and Pipeline Stalls (self-practice)

- Assume there is only forwarding path from the output of the ALU to the inputs of the ALU
- Fill in the table below with the appropriate pipeline stages (IF, ID, EXE, MEM, WB) or bubbles (BUB). Mark the forwarding if it's used.

`lw $s1, 4($s0)`	IF	ID	EXE	MEM	WB						
`add $s2, $s3, $s4`		IF	ID	EXE	MEM	WB					
`add $s5, $s1, $s2`											
`add $s7, $s5, $s2`											

香港科技大學
THE HONG KONG UNIVERSITY OF SCIENCE AND TECHNOLOGY