COMP2611 Spring 2026 Homework #1

Deadline: 11:55pm on Thursday, 5 March 2026 (HKT)

Note:

- **Submit the e-copy of your homework to COMP2611 Canvas->Assignment->Homework 1**
- **You can submit for as many times as needed before the deadline. Only the last version submitted will be marked.**
- **Avoid submission in the last few minutes (random network issues, power failure, etc).**
- **Work out the answers of the questions either directly on the hardcopy of this document or on your own paper sheets. Then scan all the answer pages into a single pdf file "homework1_<studID>.pdf", or take photos and zip them into a single zip file "homework1_<stdID>.zip". Make sure every detail of the answers is clearly visible in your submission (verify this on the scanned pages before submitting), otherwise marks may be deducted.**
- **Alternatively, you can also work out the answers directly on iPad, Surface, etc., and then submit the e-copy.**
- **Make sure you have a backup copy of the submission.**
- **NO late submissions will be accepted!**

Name_____:

Student ID_____:

Email_____:

Question	Marks
1. Boolean Algebra	/12
2. Combinational Logic	/22
3. Sequential Logic	/8
4. Sequential Logic Circuit Timing Diagram	/8
Total	/50

Question 1: Boolean Algebra (12 marks)

Simplify the following expressions to the simplest forms using the laws of Boolean Algebra only. **<u>Show detailed steps, otherwise no marks will be given</u>**.

a) $AB\overline{C}\left(\overline{(A+C)}+\overline{(B+C)}\right)$ **(3 marks)**

b) $(A+B+C)\left(\overline{A}+B\right)+\overline{(B+C)}(A+B)+A\overline{B}C$ **(5 marks)**

c) $\overline{\left((A+B)(A+C)\right)} + \overline{\left(\left(\overline{A}+B\right)\left(\overline{A}+C\right)\right)}$ **(4 marks)**

Question 2: Combinational Logic (22 marks)

A **mini production line** monitors two machines, each reporting a **2-bit status code**:

- $X = x_1x_0$ → machine 1 status (00_2 = Idle, 01_2 = Stage1, 10_2 = Stage2, 11_2 = Stage3),
- $Y = y_1y_0$ → machine 2 status (00_2 = Idle, 01_2 = Stage1, 10_2 = Stage2, 11_2 = Stage3).

For the production line to work correctly, the two machines shouldn't be in the idle state, and they should always be in different states. As such, the system raises an **alert signal** $Z = 1$ under **any of** the following conditions:

1. Either machine is idle (i.e., $X = 00$ or $Y = 00$).
2. Both machines have the same status (i.e., $X = Y$).

Otherwise the system will output $Z = 0$.

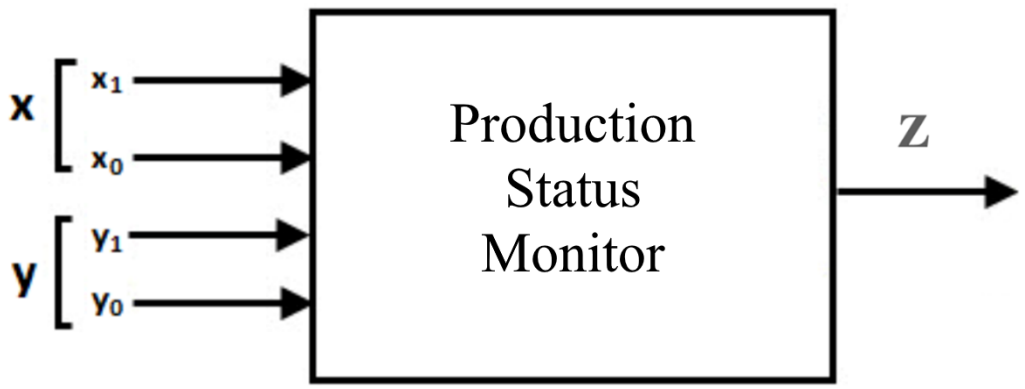

a) Complete the following truth table for the output Z. (4 marks)

Inputs				***Minterm designation***	***Maxterm designation***	**Output**
x_1	x_0	y_1	y_0			Z
0	0	0	0	m_0	M_0	1
0	0	0	1	m_1	M_1	1
0	0	1	0	m_2	M_2	1
0	0	1	1	m_3	M_3	1
0	1	0	0	m_4	M_4	1
0	1	0	1	m_5	M_5	1
0	1	1	0	m_6	M_6	0
0	1	1	1	m_7	M_7	0
1	0	0	0	m_8	M_8	
1	0	0	1	m_9	M_9	
1	0	1	0	m_{10}	M_{10}	
1	0	1	1	m_{11}	M_{11}	
1	1	0	0	m_{12}	M_{12}	
1	1	0	1	m_{13}	M_{13}	
1	1	1	0	m_{14}	M_{14}	
1	1	1	1	m_{15}	M_{15}	

b) Derive the logic function for the output $\boldsymbol{Z}$ **Sum-of-Product (SoP)** and **Product-of-Sum (PoS)** formats using minterms and maxterms respectively.

When you write the minterms/maxterms, **do not write the logical expressions, instead write the designations** m_i **or** M_i as shown in the table in part a. For example, if you would like to write the minterm $\overline{x_0} \cdot \overline{x_1} \cdot \overline{y_0} \cdot \overline{y_1}$, you should write m_0.

(6 marks)

c) Given the **SoP** presentation of output ***Z*** derived in b), **<u>draw the K-map, circle groups of 1s and then derive the corresponding simplest logic function of *Z*.</u>** (10 marks)

x_1x_0 \ y_1y_0	00	01	11	10
00				
01				
11				
10				

d) **Use Logisim** to draw the **circuit** corresponding to the **simplest logical expression** of **Z** derived in c), using **AND**, **OR, NOT** gates only. Clearly indicate the inputs x_1, x_0, y_1, and y_0 and the output Z in the circuit. Note that you should keep all the inputs to be **0** in the circuit. Paste the **circuit** below. You will receive no mark if the circuit is not created using Logisim. (2 marks)

Question 3: Sequential Logic (8 marks)

Complete the truth table of the sequential logic circuit. It has two inputs **A** and **B**, and one output **Q**.

Assume that $\mathbf{Q_t}$ represents the value of output **Q** seen at the current time and $\mathbf{Q_{t+1}}$ represents the value of the output **Q** after the circuit has been given enough time to produce the output according to the inputs and current state.

If $\mathbf{Q_t}$ will be preserved (i.e., $\mathbf{Q_{t+1}} = \mathbf{Q_t}$, no matter whether $\mathbf{Q_t}$ is 0 or 1), put "**Latch**" in the table for the output $\mathbf{Q_{t+1}}$. If the input combination is forbidden (e.g., runs into race condition), put "**Forbidden**" in the table.

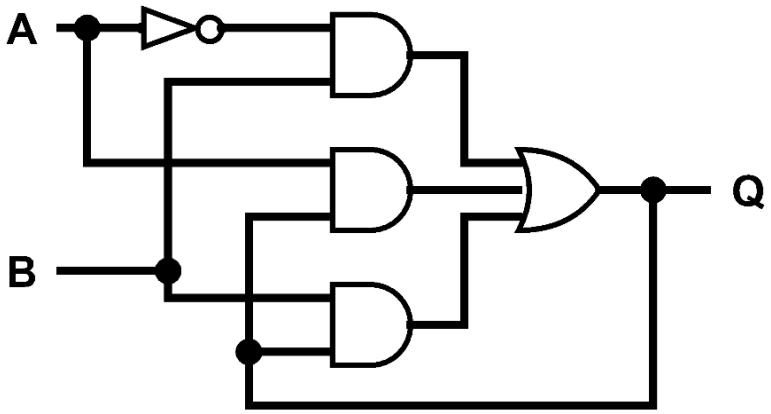

		Output	
A	B	Q_t	Q_{t+1}
0	0	0	
0	0	1	
0	1	0	
0	1	1	
1	0	0	
1	0	1	
1	1	0	
1	1	1	

Question 4: Sequential Logic Circuit Timing Diagram (8 marks)

The following circuit is composed of 3 **rising edge-triggered D flip-flops**. As shown in the timing diagram, assume that initially **Q_0, Q_1 and Q_2 are all 0**. Complete the timing diagram below for the **first 8 rising edges** of the clock signal.

Note: Ignore propagation delay. Assume that the duration of a single rising edge is only enough for the DFF to update its value once.

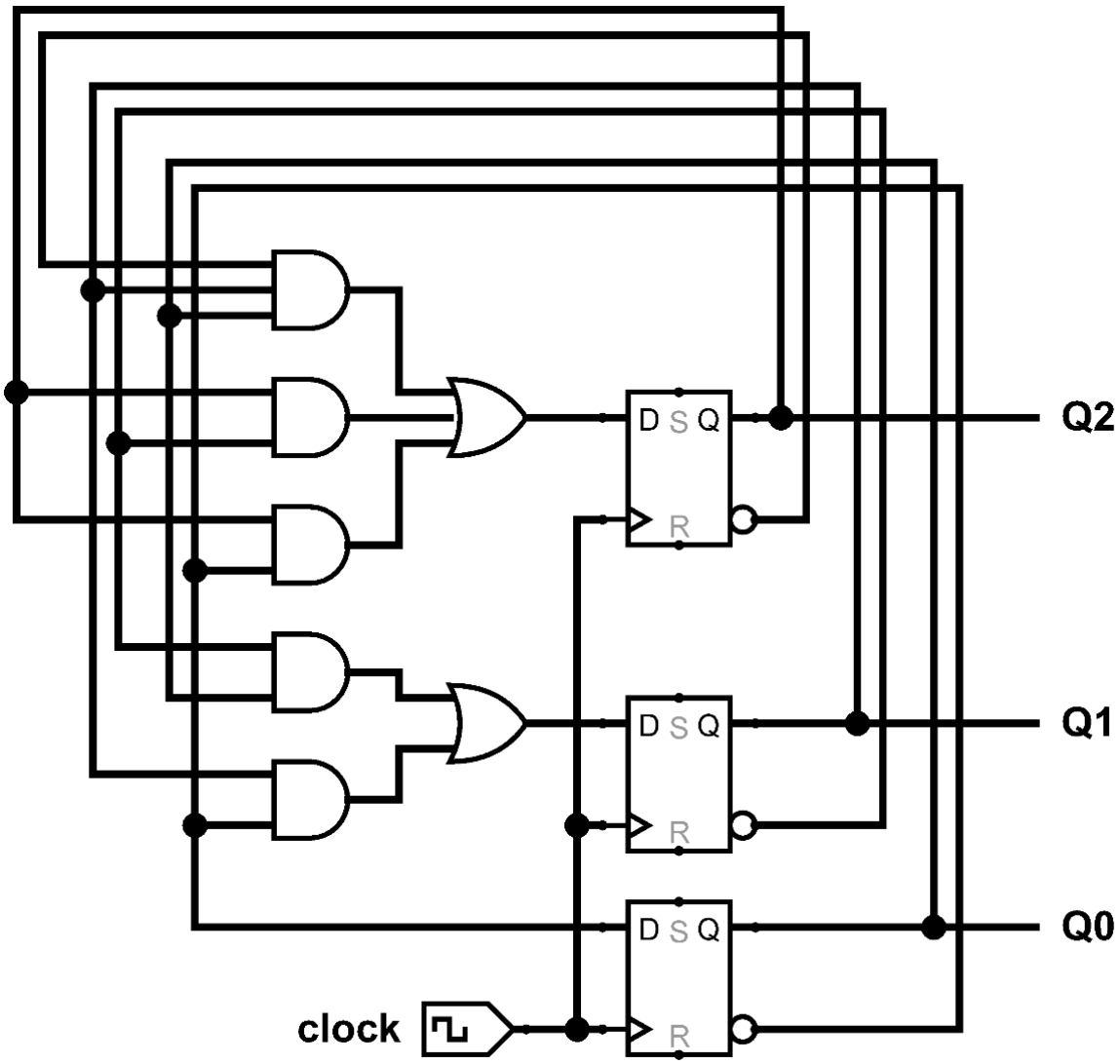

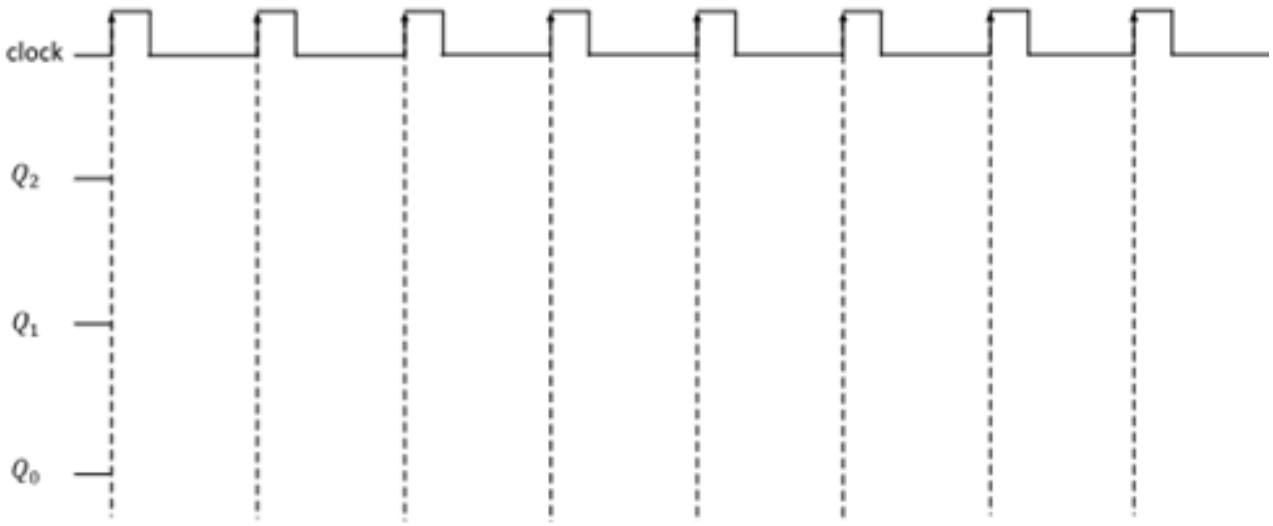
clock
Q_2
Q_1
Q_0