Homework 1

COMP2611, Spring 2026

Friday, February 27, 2026

1. Boolean Algebra

(a)

$$
\begin{aligned}
AB\bar{C}\left(\overline{(A+C)}+\overline{(B+C)}\right) &= AB\bar{C}\left(\bar{A}\bar{C}+\bar{B}\bar{C}\right) \\
&= AB\bar{C}(\bar{A}+\bar{B})\bar{C} \\
&= AB\bar{C}(\bar{A}+\bar{B}) \\
&= AB\bar{C}\bar{A}+AB\bar{C}\bar{B} \\
&= 0+0 \\
&= 0
\end{aligned}
$$

(b)

$$
\begin{aligned}
&(A+B+C)(\bar{A}+B)+\overline{(B+C)}(A+B)+A\bar{B}C \\
&= A\bar{A}+AB+B\bar{A}+BB+C\bar{A}+CB+\bar{B}\bar{C}(A+B)+A\bar{B}C \\
&= 0+B(A+\bar{A})+B+C\bar{A}+CB+\bar{B}\bar{C}A+\bar{B}\bar{C}B+A\bar{B}C \\
&= B+C\bar{A}+CB+\overline{B}A(C+\bar{C}) \\
&= B+C\bar{A}+CB+\overline{B}A \\
&= B+C\bar{A}+A\bar{B}
\end{aligned}
$$

(c)

$$
\begin{aligned}
&\overline{(A+B)(A+C)}+\overline{(\bar{A}+B)(\bar{A}+C)} \\
&= \overline{A+B}+\overline{A+C}+\overline{\bar{A}+B}+\overline{\bar{A}+C} \\
&= \bar{A}\bar{B}+\bar{A}\bar{C}+A\bar{B}+A\bar{C} \\
&= \bar{A}(\bar{B}+\bar{C})+A(\bar{B}+\bar{C}) \\
&= (\bar{A}+A)(\bar{B}+\bar{C}) \\
&= \bar{B}+\bar{C}
\end{aligned}
$$

2. Combinational Logic

(a)

Inputs				Minterm designation	Maxterm designation	Output
x_1	x_0	y_1	y_0			Z
0	0	0	0	m_0	M_0	1
0	0	0	1	m_1	M_1	1
0	0	1	0	m_2	M_2	1
0	0	1	1	m_3	M_3	1
0	1	0	0	m_4	M_4	1
0	1	0	1	m_5	M_5	1
0	1	1	0	m_6	M_6	0
0	1	1	1	m_7	M_7	0
1	0	0	0	m_8	M_8	1
1	0	0	1	m_9	M_9	0
1	0	1	0	m_{10}	M_{10}	1
1	0	1	1	m_{11}	M_{11}	0
1	1	0	0	m_{12}	M_{12}	1
1	1	0	1	m_{13}	M_{13}	0
1	1	1	0	m_{14}	M_{14}	0
1	1	1	1	m_{15}	M_{15}	1

(b)

$$Z = m_0 + m_1 + m_2 + m_3 + m_4 + m_5 + m_8 + m_10 + m_12 + m_15$$

$$Z = M_6 M_7 M_9 M_{11} M_{13} M_{14}$$

(c)

x_1x_0 \ y_1y_0	00	01	11	10
00	1	1	1	1
01	1	1	0	0
11	1	0	1	0
10	1	0	0	1

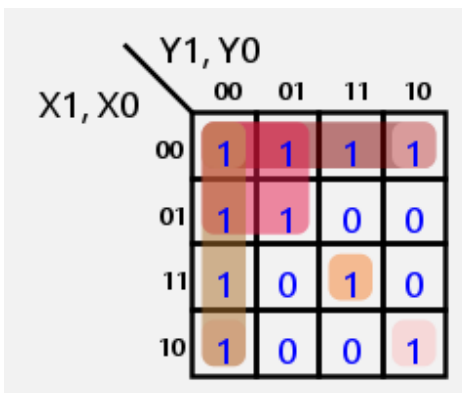

$$Z = \bar{x}_1\bar{x}_0 + \bar{y}_1\bar{y}_0 + \bar{x}_1\bar{y}_1 + \bar{x}_0\bar{y}_0 + x_1x_0y_1y_0$$

(d)

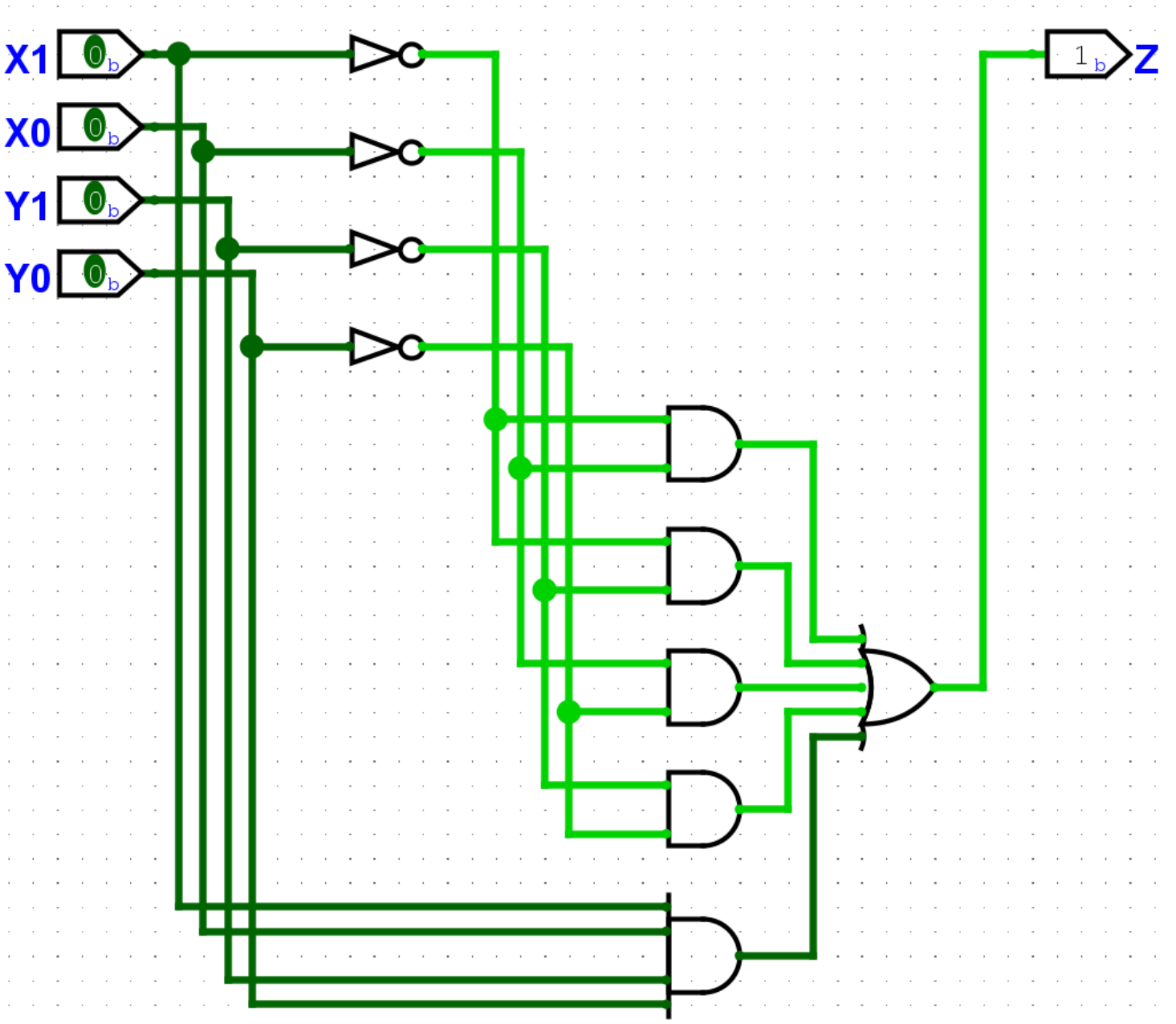

3. Problem 3

		Output	
A	**B**	**Q_t**	**Q_{t+1}**
0	0	0	0 Latch
0	0	1	0 Latch
0	1	0	1 Latch
0	1	1	1 Latch

		Output	
A	**B**	**Q_t**	**Q_{t+1}**
1	0	0	0 Forbidden
1	0	1	1 Forbidden
1	1	0	1 Latch
1	1	1	1 Latch
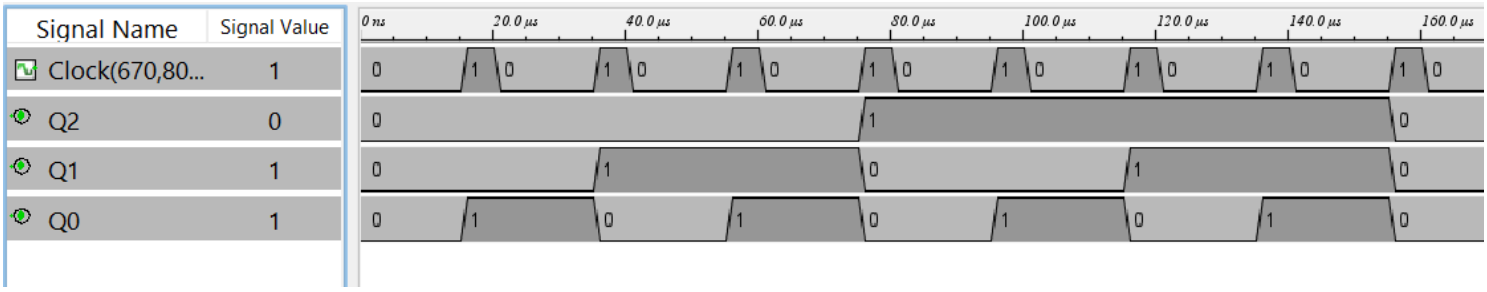
4. Problem 4