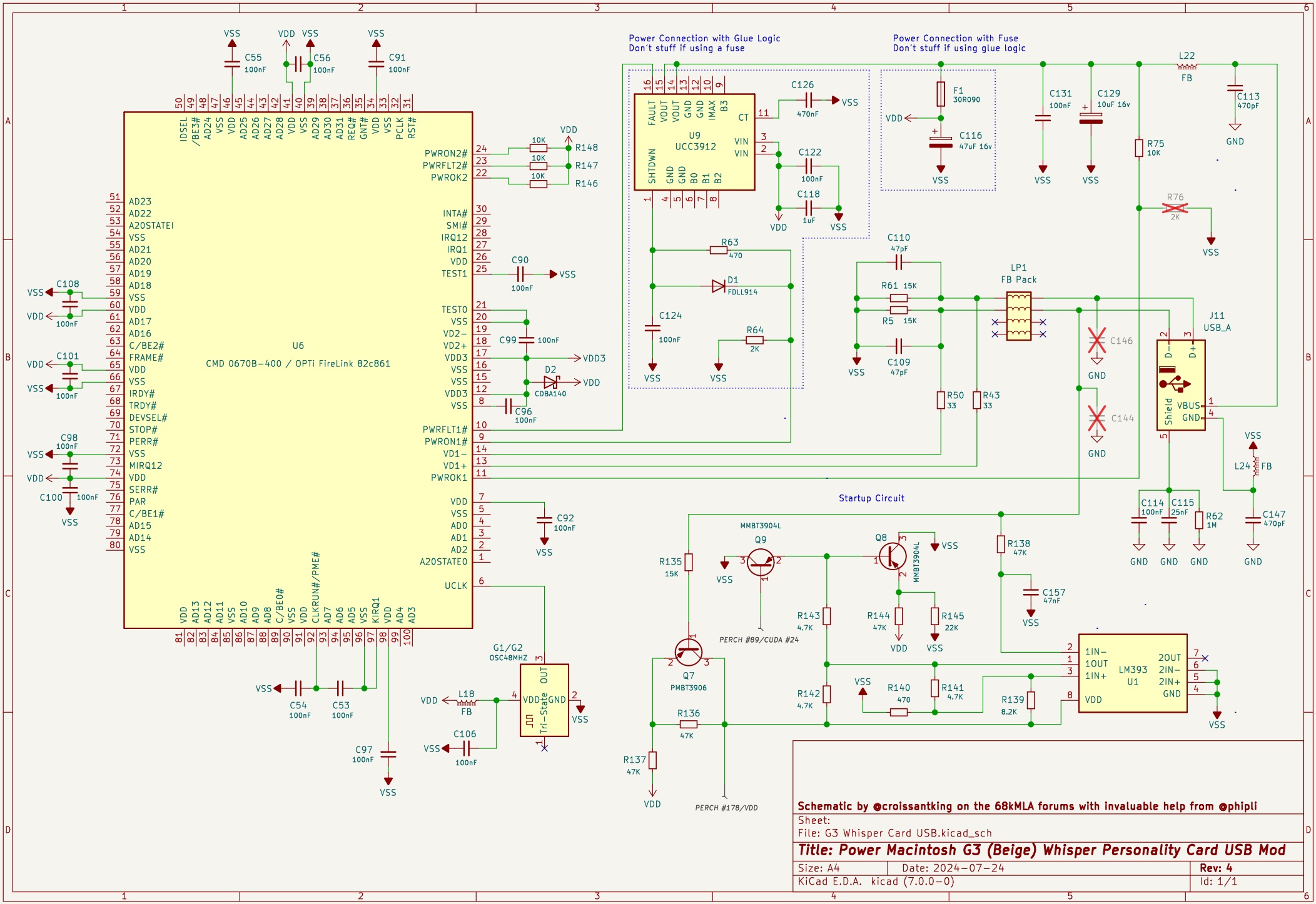


Schematic by @croissantking on the 68kMLA forums with invaluable help from @phipli

Sheet:
File: G3 Whisper Card USB.kicad_sch

**Title: Power Macintosh G3 (Beige) Whisper Personality Card USB Mod**

| | | |
|---|---|---|
| Size: A4 | Date: 2024-07-24 | Rev: 4 |
| KiCad E.D.A. kicad (7.0.0-0) | | Id: 1/1 |