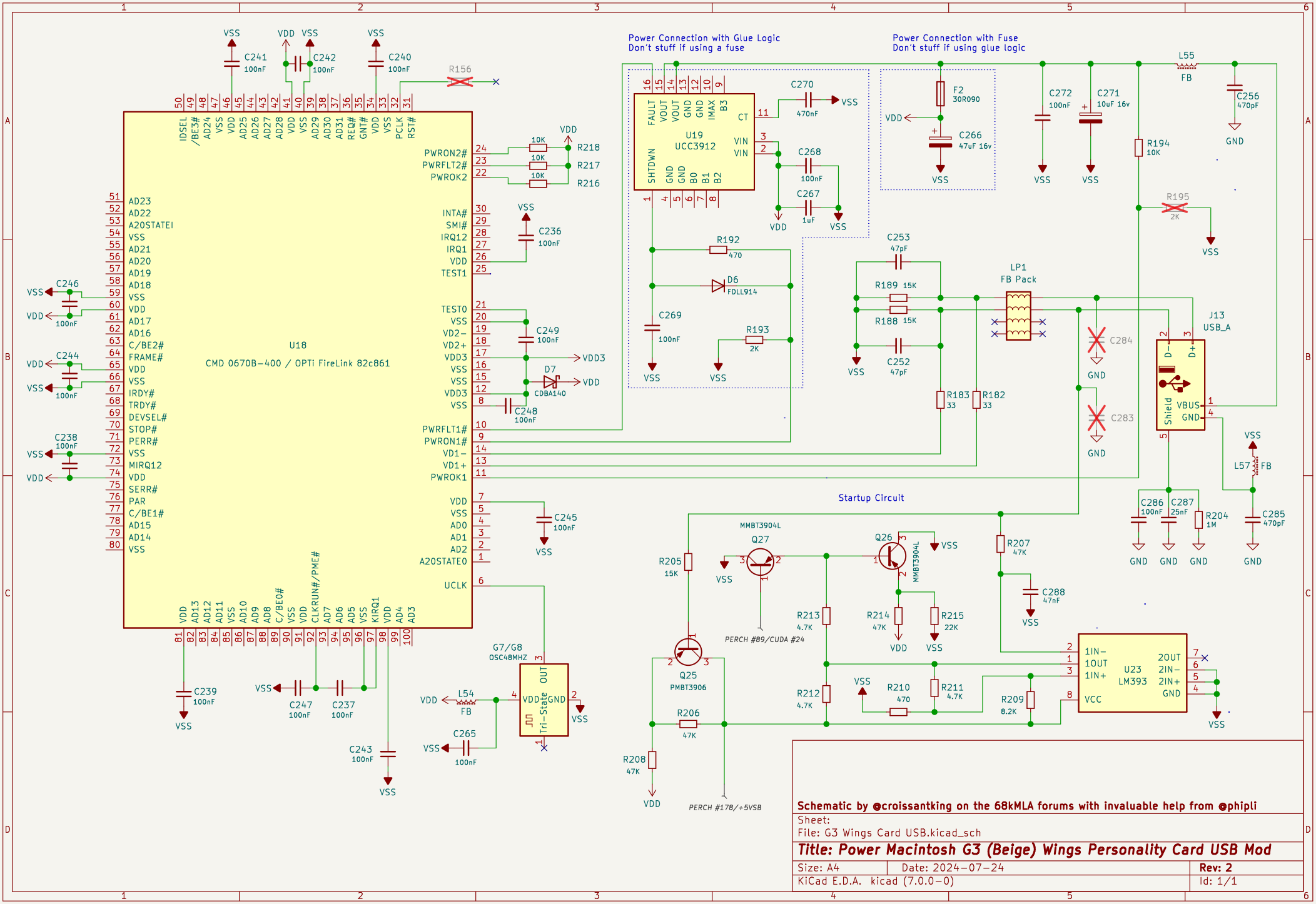
Power Connection with Glue Logic
Don't stuff if using a fuse
Power Connection with Fuse
Don't stuff if using glue logic
U18
CMD 0670B-400 / OPTi FireLink 82c861
U19
UCC3912
U23
LM393
LP1
FB Pack
J13
USB_A
Startup Circuit
PERCH #89/CUDA #24
PERCH #178/+5VSB
G7/G8
OSC48MHZ
Schematic by @croissantking on the 68kMLA forums with invaluable help from @phipli
Sheet:
File: G3 Wings Card USB.kicad_sch
Title: Power Macintosh G3 (Beige) Wings Personality Card USB Mod
Size: A4
Date: 2024-07-24
Rev: 2
KiCad E.D.A. kicad (7.0.0-0)
Id: 1/1