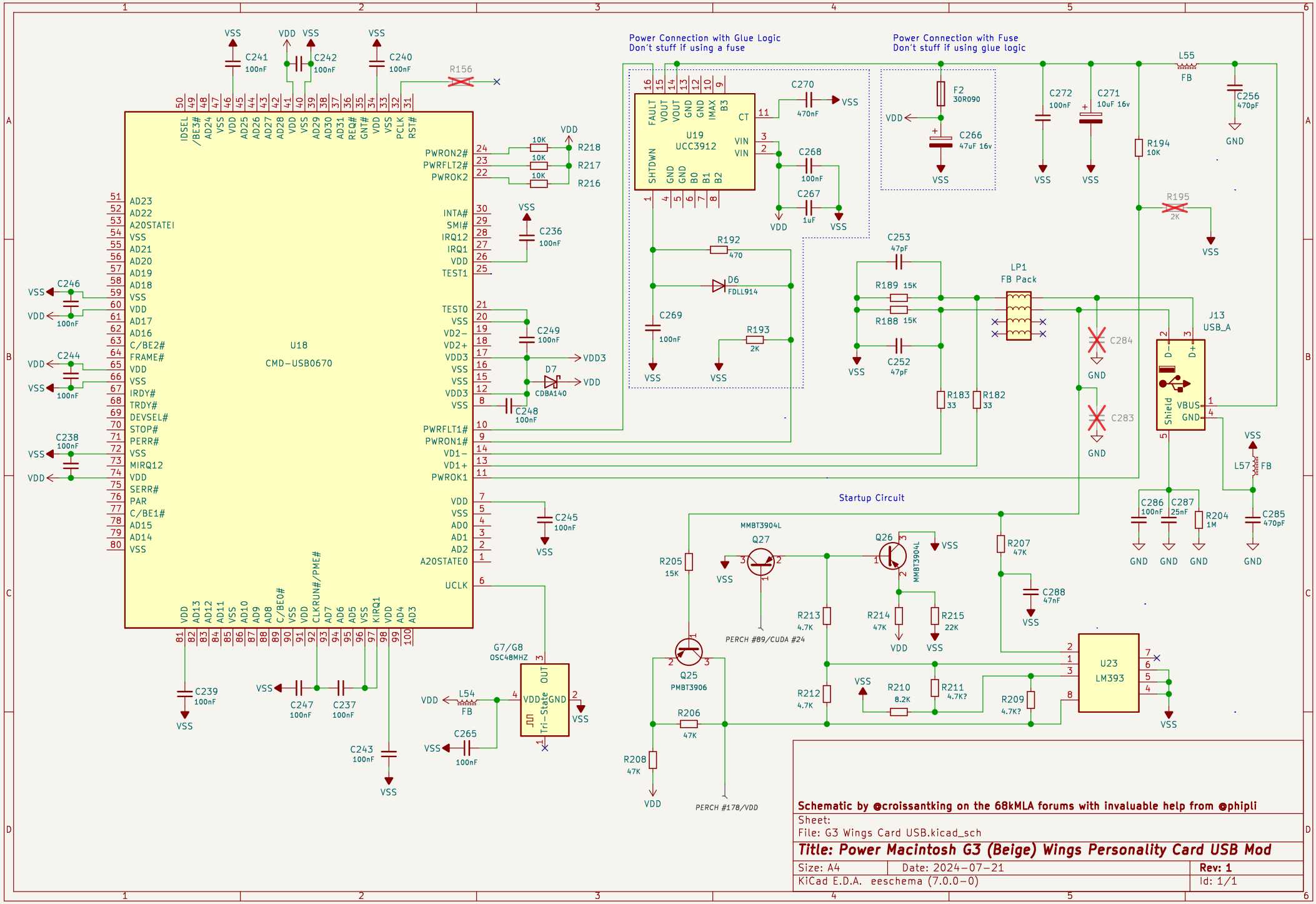

Schematic by @croissantking on the 68kMLA forums with invaluable help from @phipli

Sheet:
File: G3 Wings Card USB.kicad_sch

Title: Power Macintosh G3 (Beige) Wings Personality Card USB Mod

Size: A4	Date: 2024-07-21	Rev: 1
KiCad E.D.A. eeschema (7.0.0-0)		Id: 1/1