系統樹について
＆
NCBIデータベースについて

2026/04/23

栽培植物起原学分野　准教授

堺　俊之

系統樹の数値の意味

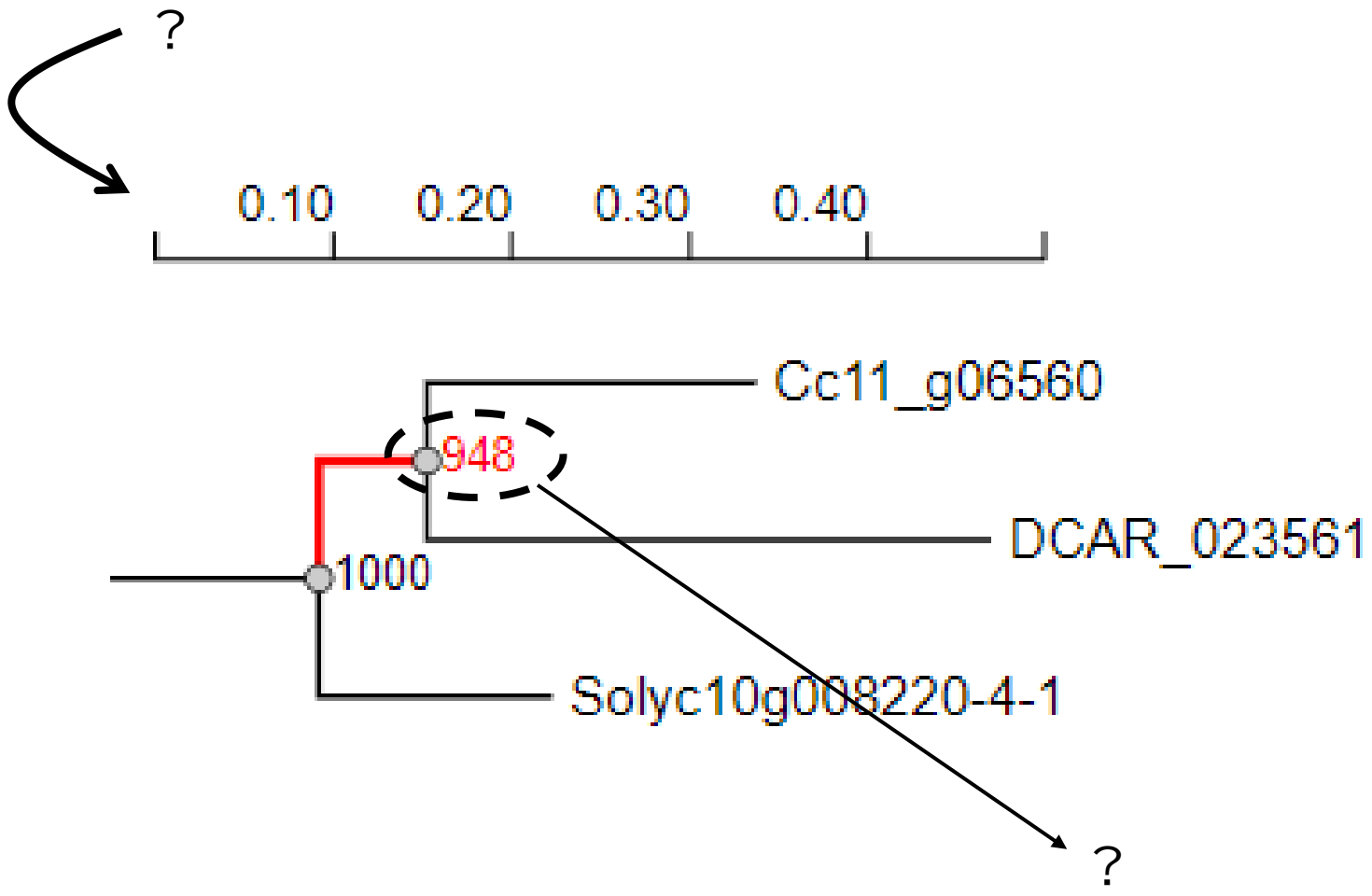
?
0.10
0.20
0.30
0.40
Cc11_g06560
948
DCAR_023561
1000
Solyc10g008220-4-1
?

各数値は系統的な距離や分岐の信頼度を示す

Phylogenetic distance: 系統的な距離、
どれだけ配列に違いがあるかの基準

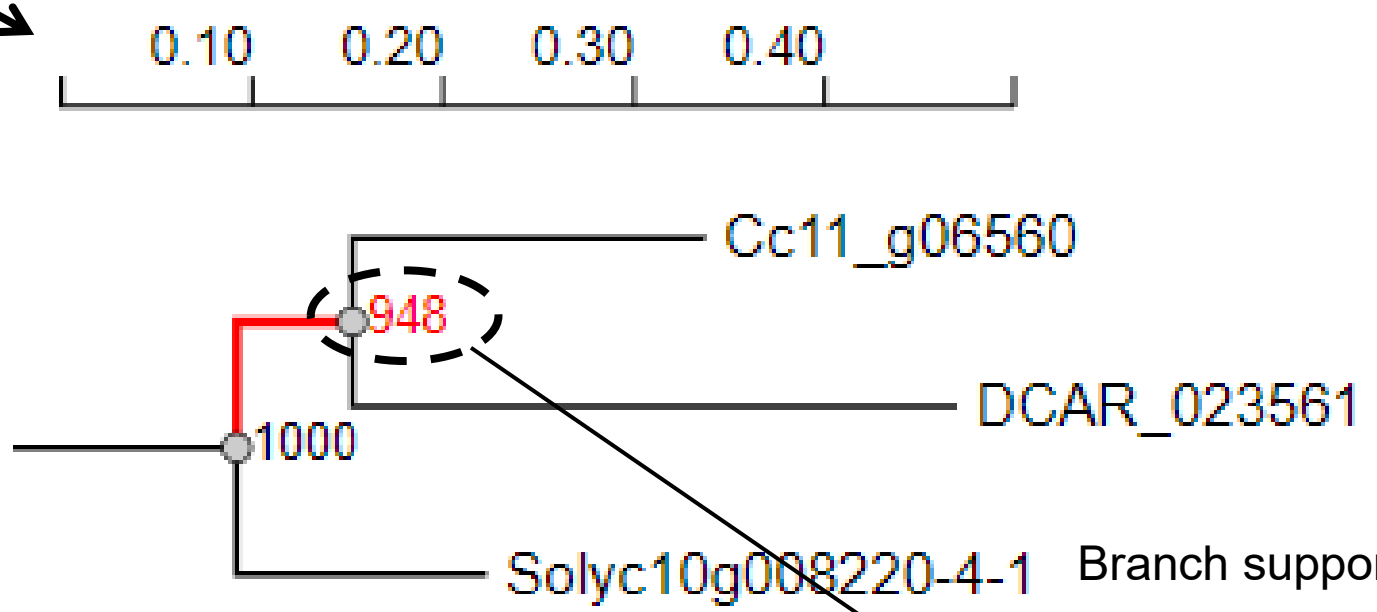

Branch support value
分岐の信頼度。
反復数に近いほど信頼度が高い。
（分岐していると考えて良い。）
割合で表示される場合も。

系統樹は系統的な距離の情報を含んでいるものを示す

○Phylogenetic tree

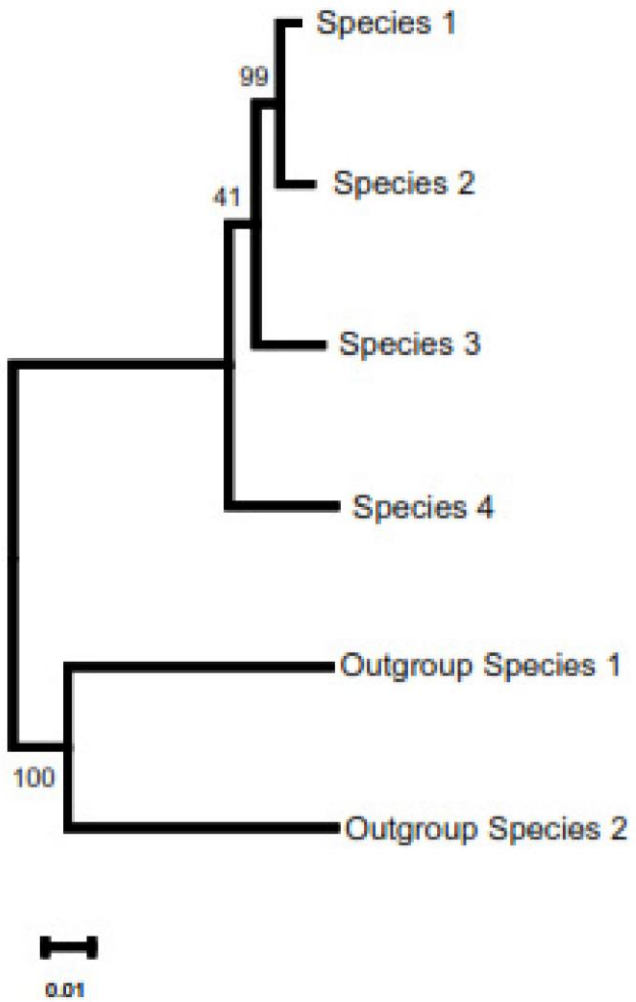

×Cladogram/Dendrogram

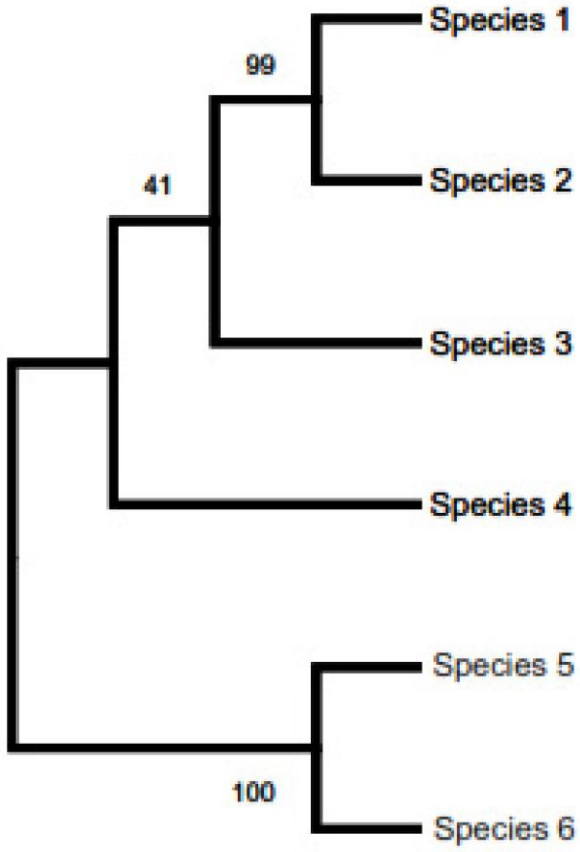

系統樹に基づいた進化的な関係の推定

Q. 配列から以下の様な系統樹が得られた。進化の過程で
　DからCに分化し、B,Aに更に分化したと言えるか…？

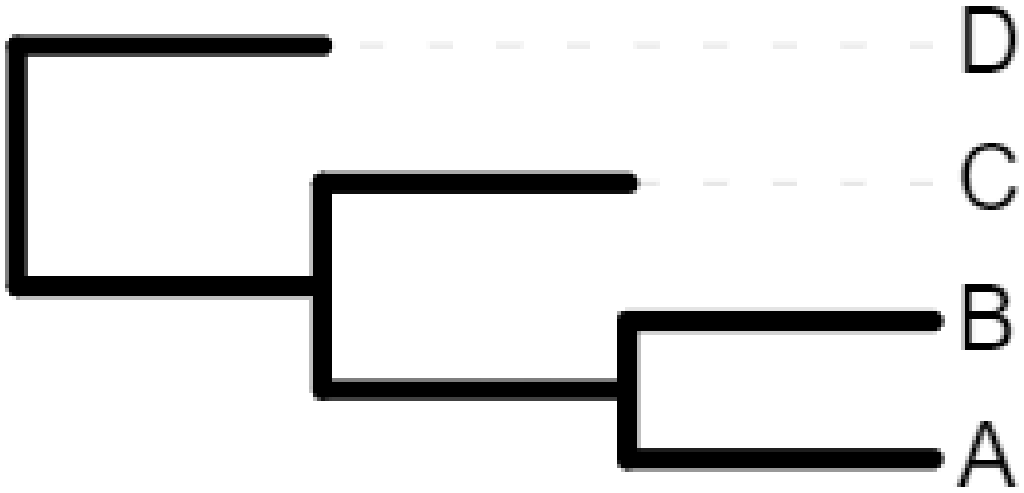

系統樹に基づいた進化的な関係の推定

A. 言えない

どの遺伝子/種が最初か分からないので、

系統樹の関係からだけでは起源や進化的な関係は判断できない

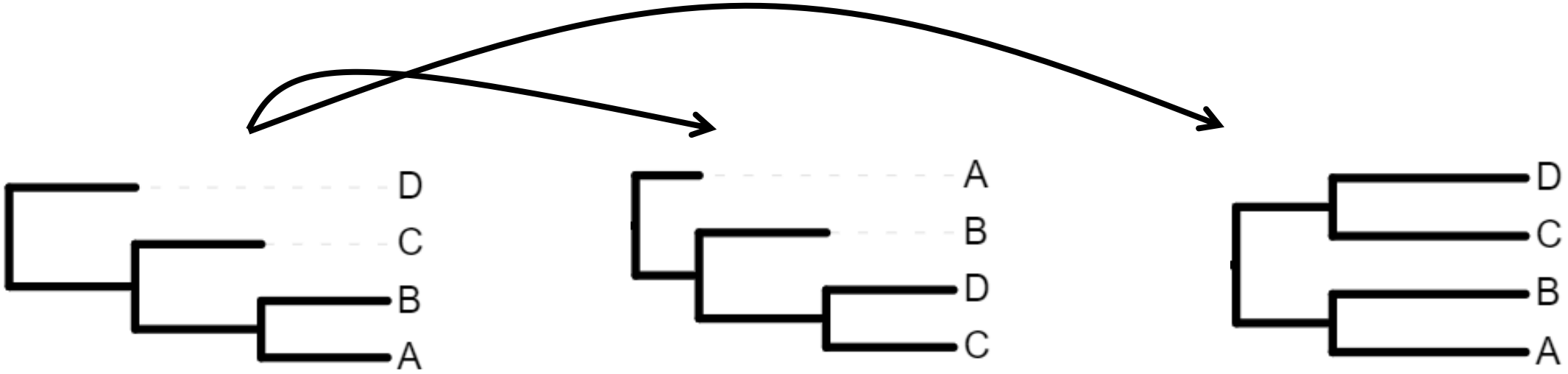

系統樹に基づいた進化的な関係の推定

起源や進化的な関係が判断できない場合: その①

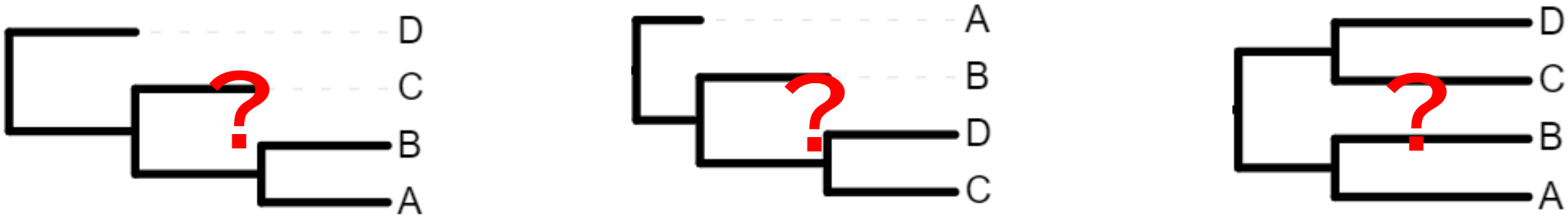

系統的な関係性
（系統的に近いか遠いか）
のみ示す

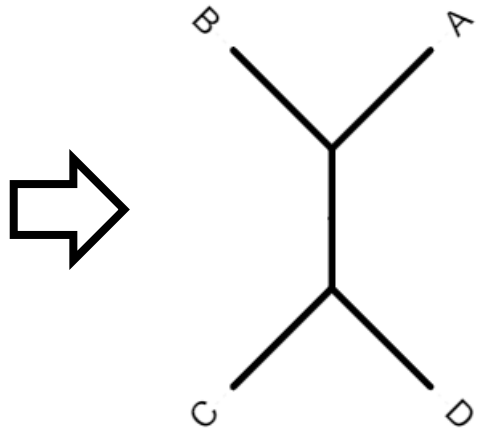

Unrooted tree と呼ぶ

系統樹に基づいた進化的な関係の推定

起源や進化的な関係が判断できない場合: その②

Outgroup(外群)を入れRootを決める

○

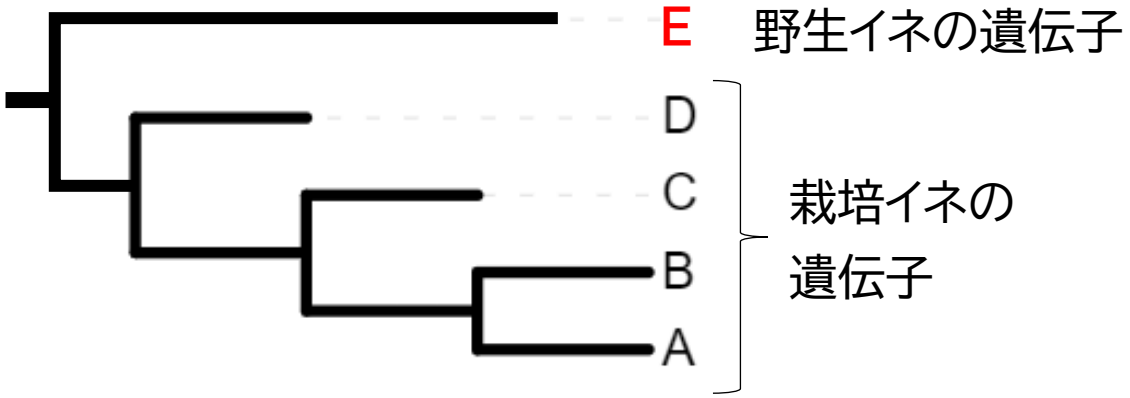

×

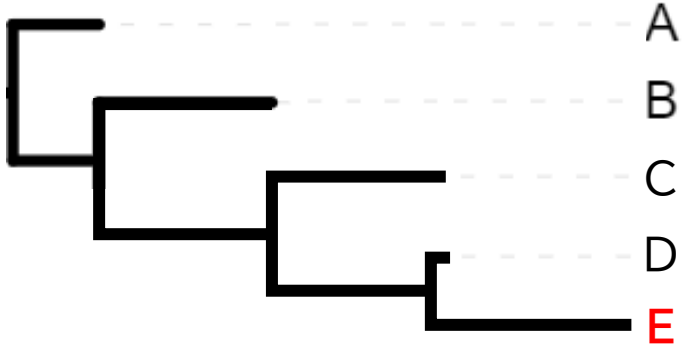

外群の配列をどう手に入れるのか？

① 外群のサンプルを準備しておく

→ 今回は無い

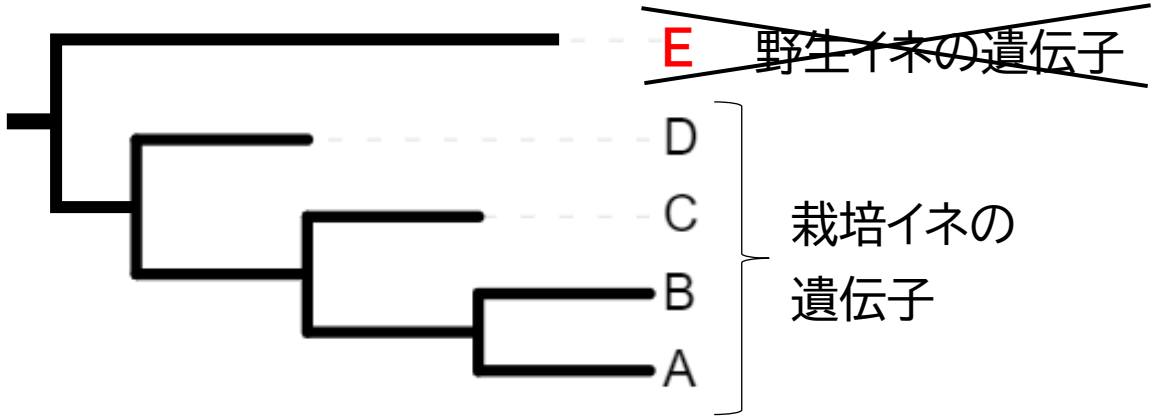

② NCBI等のシーケンスデータベースで使えそうな遺伝子配列を探す

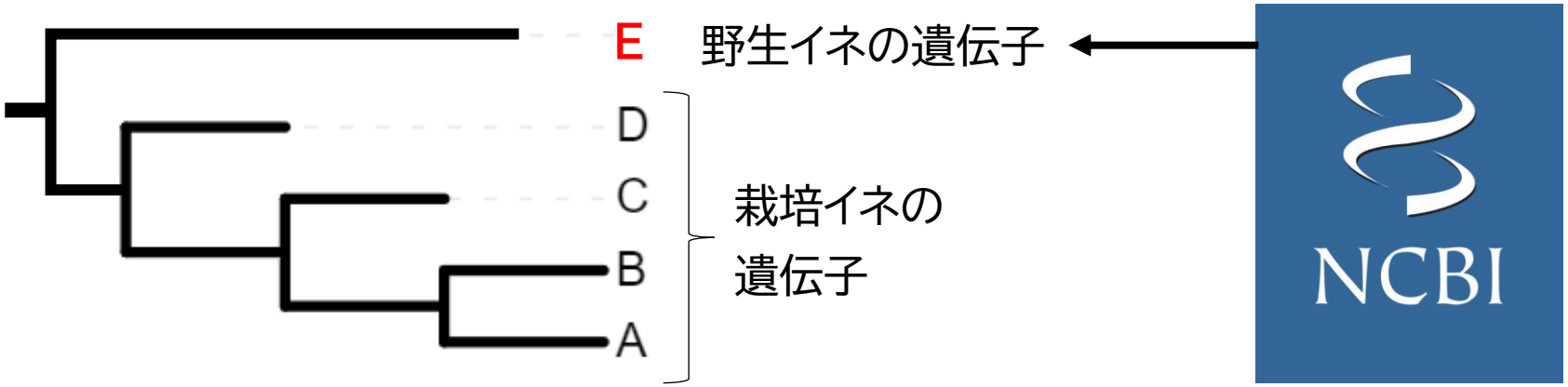

代表的な生物学のデータベース

- NCBI（National Center of Biotechnology Information）
- EBI (European Bioinformatics Institute)
- SIB (Swiss Institute of Bioinformatics)

塩基配列・アミノ酸配列・タンパク質の構造・文献情報等、
様々な生物学のデータを上記のプラットフォームを通じて検索可能

NCBIのBLASTで類似配列の検索が可能

配列A

GGGAAAAAAACATTTTA
AAAAAATCTATAAAAAAA
AATAGAATTCATAAAAAT
TCTTGCTTTTCCATATAT
TGAGCTTCAATTATTTTT
TTTTTCTCATAAAAAGTT
GCTTTTGGGAAAAAAAA
AAAAAAACTCATTTCTAA
TACCAAACAACTGATTT
CTTCAGGGAGAGTGC…

BLASTで
NCBIのデータベースを検索

様々な生物種の持つ
配列Aの類似配列を検出

GGGAAAAAAACATTTTA
AAAAAATCTATAAAAAAA
AATAGAATTCATAAAAAT
TCTTGCATTTCCATATAT
TGAGCTTCAATTATTTTT
TTTTTCTCATAAAAAGTT
GCTTTTGGGAAAAAAAA
AAAAAAACTCTTTTCTAA
TACCAAACAACTGATTT
CTTCAGGGAGAGTGC…

GGGAAAAAAACATTTTA
AAAAAATCTATAAAAAAA
AATAGAATTCATAAAAAT
TCTTCCTTTTCCATATAT
TGAGCTTCAATTATTTTT
TTTTTCTCATAAAAAGTT
GCTTTTGGGAAATAAAA
AAAAAAACTCATTTCTAA
TACCAAACAACTGATTT
CTTCAGGGAGAGTGC…

GGGAAAAAAACATTTTA
AAAACATCTATAAAATAA
AATAGAATTCATAAAAAT
TCTTGCTTTTCCATATAT
TGAGCTTCAATTATTTTT
TTTTTCTCATAAAAAGTT
GCTTTTGGGAAAAAAAA
AAAAAAACTCATTTCTAA
TACCAGACAACTGATTT
CTTCAGGGAGAGTGC…

NCBIのBLASTで外群となる類似配列を検索する

ex) どんな種が配列Aの類似配列を持っているか？

配列A

GGGAAAAAAACATTTTA
AAAAAATCTATAAAAAAA
AATAGAATTCATAAAAAT
TCTTGCTTTTCCATATAT
TGAGCTTCAATTATTTTT
TTTTTCTCATAAAAAGTT
GCTTTTGGGAAAAAAAA
AAAAAAACTCATTTCTAA
TACCAAACAACTGATTT
CTTCAGGGAGAGTGC…

⇨

Descriptions | Graphic Summary | Alignments | Taxonomy

Sequences producing significant alignments Download Select columns Show 100

select all *30 sequences selected* GenBank Graphics Distance tree of results MSA Viewer

Description	Scientific Name	Max Score	Total Score	Query Cover	E value	Per. Ident	Acc. Len	Accession
PREDICTED: Solanum lycopersicum putative late blight resistance protein homolog R1B-14 (LOC10126636…	Solanum lycope…	6231	6231	100%	0.0	100.00%	3374	XM_004248127.5
PREDICTED: Solanum pennellii putative late blight resistance protein homolog R1B-14 (LOC107002325), tr…	Solanum pennellii	5749	5749	98%	0.0	98.07%	3309	XM_015200299.2
PREDICTED: Solanum pennellii putative late blight resistance protein homolog R1B-14 (LOC107002325), tr…	Solanum pennellii	5557	5557	94%	0.0	98.45%	3179	XM_027912601.1
PREDICTED: Solanum tuberosum putative late blight resistance protein homolog R1B-14 (LOC102595315),…	Solanum tubero…	5142	5142	99%	0.0	94.65%	3305	XM_006366246.2
Solanum lycopersicum clone SINRC0 NLR required for cell death 0 mRNA, complete cds	Solanum lycope…	4876	4876	79%	0.0	99.70%	2664	PP886667.1
PREDICTED: Solanum stenotomum putative disease resistance RPP13-like protein 3 (LOC125866224), tra…	Solanum stenot…	4752	[illegible]	[illegible]	0.0	[illegible]	[illegible]	[illegible]
PREDICTED: Solanum stenotomum putative disease resistance RPP13-like protein 3 (LOC125866224), tra…	Solanum stenot…	4643	[illegible]	[illegible]	[illegible]	[illegible]	[illegible]	[illegible]
PREDICTED: Solanum stenotomum putative disease resistance RPP13-like protein 3 (LOC125866224), tra…	Solanum stenot…	4632	[illegible]	[illegible]	[illegible]	[illegible]	[illegible]	[illegible]
PREDICTED: Solanum verrucosum putative late blight resistance protein homolog R1B-14 (LOC125835496)…	Solanum verruc…	4527	4527	79%	0.0	97.33%	2664	XM_049514631.1
PREDICTED: Solanum dulcamara putative disease resistance RPP13-like protein 3 (LOC129877507), mRNA	Solanum dulca…	4337	4337	81%	0.0	95.13%	3103	XM_055953019.1
PREDICTED: Lycium barbarum putative late blight resistance protein homolog R1B-14 (LOC132630207), tra…	Lycium barbarum	4235	[illegible]	[illegible]	0.0	[illegible]	[illegible]	[illegible]
PREDICTED: Lycium barbarum putative late blight resistance protein homolog R1B-14 (LOC132630207), tra…	Lycium barbarum	4071	[illegible]	[illegible]	0.0	93.22%	3406	XM_060345794.1
PREDICTED: Lycium barbarum putative late blight resistance protein homolog R1B-14 (LOC132630207), tra…	Lycium barbarum	4052	4268	92%	0.0	93.39%	3422	XM_060345798.1

Solanum lycopersicum
Solanum pennelli
Solanum tuberosum
…
Lycium barbarum
等々

NCBIのBLASTで外群となる類似配列を検索する

特定の種が持つ遺伝子の中で類似する配列を検索等も可能

ex) *Arabidopsis thaliana*のゲノム中に似た配列があるか？

配列A

GGGAAAAAAACATTTTA
AAAAAATCTATAAAAAAA
AATAGAATTCATAAAAAT
TCTTGCTTTTCCATATAT
TGAGCTTCAATTATTTTT
TTTTTCTCATAAAAAGTT
GCTTTTGGGAAAAAAAA
AAAAAAACTCATTTCTAA
TACCAAACAACTGATTT
CTTCAGGGAGAGTGC…

⇨ *Arabidopsis Thaliana* のみ対象

Descriptions | Graphic Summary | Alignments | Taxonomy

Sequences producing significant alignments Download Select columns Show 100

select all *100 sequences selected* GenPept Graphics Distance tree of results Multiple alignment MSA Viewer

Description	Scientific Name	Max Score	Total Score	Query Cover	E value	Per. Ident	Acc. Len	Accession
ZAR1 [Arabidopsis thaliana]	Arabidopsis thali…	180	180	94%	1e-49	31.41%	850	OAP03660.1
unnamed protein product [Arabidopsis thaliana]	Arabidopsis thali…	179	179	94%	1e-49	31.41%	850	CAA0385601.1
HOPZ-ACTIVATED RESISTANCE 1 [Arabidopsis thaliana]	Arabidopsis thali…	179	179	94%	1e-49	31.41%	852	NP_190664.1
myosin heavy chain homolog, partial [Arabidopsis thaliana]	Arabidopsis thali…	179	179	94%	2e-49	31.41%	904	AAA63149.1
unnamed protein product [Arabidopsis thaliana]	Arabidopsis thali…	179	179	94%	3e-49	31.41%	1306	CAD5325452.1
unnamed protein product [Arabidopsis thaliana]	Arabidopsis thali…	179	179	94%	3e-49	31.41%	1304	CAD5325453.1
unnamed protein product [Arabidopsis thaliana]	Arabidopsis thali…	178	178	92%	5e-49	34.87%	837	CAD5325042.1
unnamed protein product [Arabidopsis thaliana]	Arabidopsis thali…	178	178	92%	5e-49	34.87%	837	VYS59567.1
unnamed protein product [Arabidopsis thaliana]	Arabidopsis thali…	177	177	96%	1e-48	30.89%	906	CAA0407261.1
unnamed protein product [Arabidopsis thaliana]	Arabidopsis thali…	177	177	96%	1e-48	31.44%	906	CAA0291745.1
Disease resistance protein (CC-NBS-LRR class) family [Arabidopsis thaliana]	Arabidopsis thali…	177	177	96%	1e-48	31.44%	906	NP_001319213.1
hypothetical protein AXX17_AT1G47690 [Arabidopsis thaliana]	Arabidopsis thali…	177	177	96%	1e-48	31.44%	906	OAP11997.1
unnamed protein product [Arabidopsis thaliana]	Arabidopsis thali…	177	177	96%	1e-48	30.89%	990	CAA0407259.1
F12M16.25 [Arabidopsis thaliana]	Arabidopsis thali…	177	177	96%	2e-48	31.44%	1584	AAF69538.1

NCBIのBLASTで外群となる類似配列を検索する

特定の種が持つ遺伝子の中で類似する配列を検索等も可能
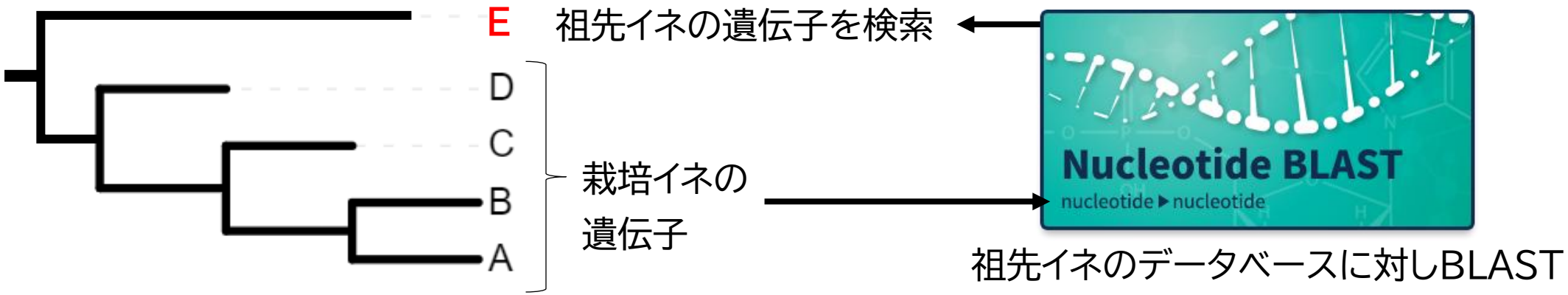
より祖先の種に類似配列があれば、外群として利用できる可能性がある