`

AMRITA VISHWA VIDYAPEETHAM

AHEAD Online

Introduction to Computers

Veena S
Department of CSE
Amrita Viswa Vidyapeetham

Introduction

- Basics of a Computer.
- Evolution of a Computer.

What is a Computer

- A computer is an electronic machine that manipulates data based on a list of instructions.
- Performs computational and logical operations much faster than humans.
- It takes data as input, process it, store it and output the result.
- Data means any raw facts and the processed output is known as information.

Functionalities

- Receives input data and instructions.
- Store data and instructions.
- Process data.
- Produce results.
- Control the above functionalities.

Functionalities

- *Input* refers to whatever is sent to a Computer system.
- *Data* refers to the symbols that represent facts, objects, and ideas.
- *Processing* is the manipulation of data with instructions.

Hardware and Software

- Hardware means basically anything that you can touch with your fingers.
- It refers to the physical components of your computer such as system unit, mouse, keyboard, monitor etc.
- Software means the set of instructions that makes the computers work
- Software is held in a storage device and is loaded to computer's RAM as and when required

Hardware Components

Input Devices

- Data or Instructions are entered into the computer with the help of input devices.
- eg. keyboard, mouse, joystick, webcam, scanner etc.

Output Devices

- Computer communicates to outside world through output devices
- Eg. monitor, printer, plotter, video projector, speakers etc.

Hardware Components

Storage Devices

- A large amount of data can be stored on computers.
- The data entered into a computer is stored on its hard disk.
- The Hard Disk, CD-ROM, DVD, Pen Drives etc. are used to store data/information permanently.

Software Components

- The term software refers to the set of instructions that directs the hardware to accomplish a task.
- Mainly classified into
    1. System Software
    2. Application Software
    3. Utility software
- System Software/Operating System controls all the components of a computer.
- It serves as an interface between user and hardware.

Software Components

- Application software is designed for a specific purpose of the user.
- For example;
  - Word Processing: MS-Word, Lotus Pro
  - Spreadsheets: MS-Excel, Lotus 123
  - Database: MS-Access, Lotus Approach
  - Presentation: MS-PowerPoint, Lotus Freelance
  - Multimedia: Windows Media Player, VLC Player

Software Components

- Utility software:
  - Designed to solve any issues or a complex situation in a computer.
  - It is used to support the whole computer infrastructure.
- Utility software are mainly categorized into;
  - System utilities
  - File management
  - Storage management
  - Miscellaneous

Characteristics

- High Processing Speed
- Accuracy
- Reliability
- Versatility
- Diligence

Evolution

- **Abacus**
  - Invented around 500BC used by many cultures (China, Mesopotamia, Japan, Greece, Rome, etc.).
- **Pascaline**
- In 1642, Blaise Pascal (French mathematician) this mechanical calculator.
- **Stepped Reckoner**
- In 1671, Gottfried von Leibniz (German mathematician) modified Pascaline with multiplications, divisions, and square roots.

None of these machines had memory, and they required human intervention at each step.

Evolution

Difference Engine

- Simple mechanical computer.
- Developed by Charles Babbage (English mathematician also called as father of computer)in 1822.

Analytical Engine

- Mechanical general purpose computer.
- Proposed by Charles Babbage.
- Successor of difference engine.

Objectives

- Generation of computers.

Computer Generations

- First Generation (1940-56)
- Second Generation(1956-63)
- Third Generation(1964-71)
- Fourth Generation(1971-80)
- Fifth Generation(1980 –Beyond)

First Generation

Technology	Vacuum Tubes
Size	Very large
Example	ENIAC,UNIVAC
Language	Machine Language

This Photo by Unknown Author is licensed under CC BY-NC

Vacuum Tubes

First Generation

- Uses large amount of electricity.
- Input was based on punched cards.
- Output was displayed on printouts.
- Produces large amount of heat.
- Difficult to program and use.

Second Generation

Technology	Transistors
Size	Smaller compared to first generation
Example	IBM 1620, UNIVAC 1108
Language	assembly Language

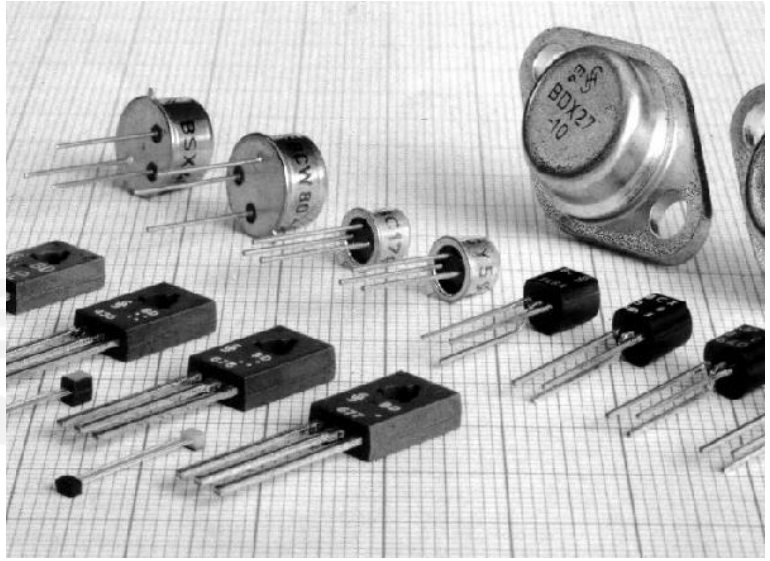

This Photo by Unknown Author is licensed under CC BY

Transistors

Second Generation

- Good speed.
- Use less amount of energy.
- Portable.
- More accurate than first generation.

Third Generation

Technology	Integrated Circuits
Size	Smaller compared to first two generations
Example	IBM 360,HONEYWELL 6000
Language	ALGOL,BASIC,C

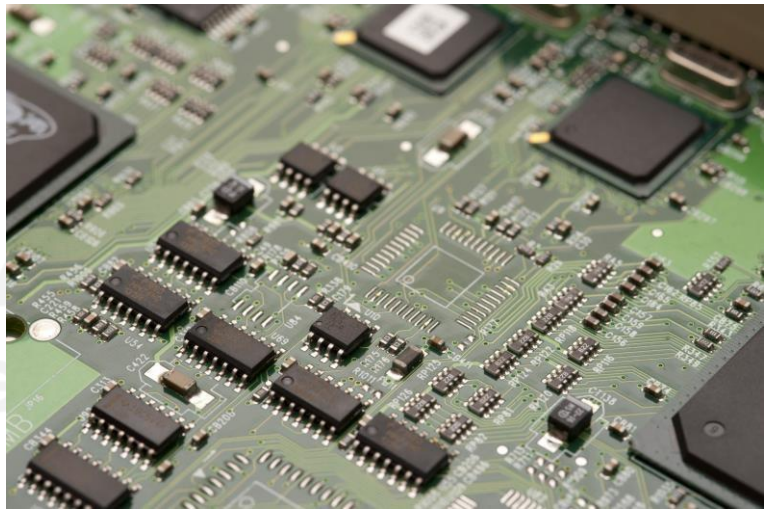

This Photo by Unknown Author is licensed under CC BY

Third Generation

- High speed.
- Reduced size hence portable.
- Reduced energy usage.
- Keyboard and monitor for input output.
- Operating System for user interface.

Fourth Generation

Technology	LSI and VLSI chips
Size	Smaller
Example	IBM , Apple Macintosh,Intel 4004 series
Language	Perl, PHP, Python

This Photo by Unknown Author is licensed under CC BY-SA

Fourth Generation

- Less expensive.
- Portable.
- Powerful, compact and low maintenance.
- Greater Storage capacity.

Fifth Generation

Technology	ULSI Technology
Size	Smaller
Example	Laptops, super computers
Language	OPS5, Mercury

This Photo by Unknown Author is licensed under CC BY-SA

Fifth Generation

- Parallel Computing
- Artificial Intelligence Development
- Intricate and diverse operating system.

Takeaways

- Different generations of computers.
- Technology used in each generation.
- Characteristics of each generations.

Objectives

- Classification of computers.
- Logic Based Classifications.
- Capacity based classifications.

Classification based on Logic

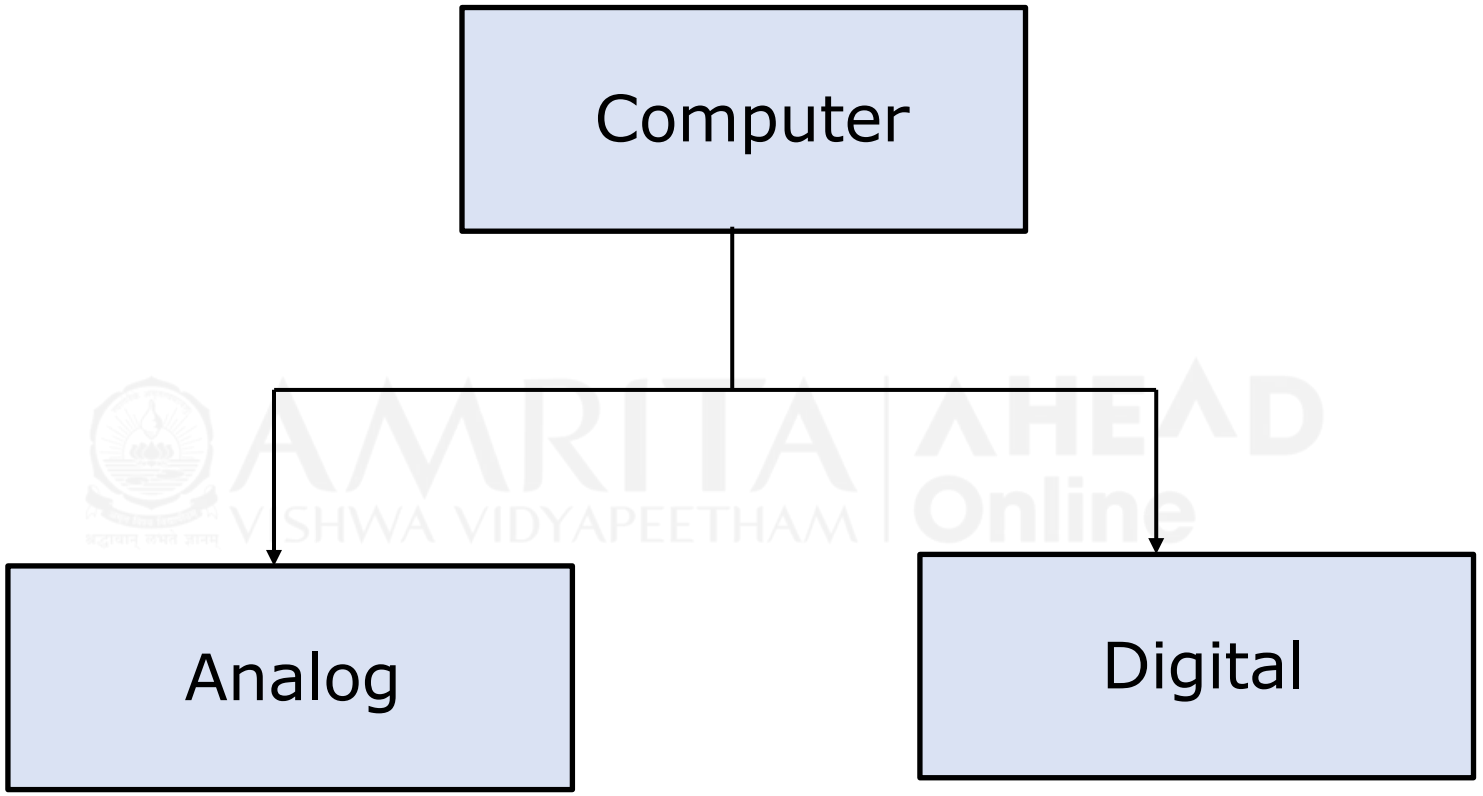

Analog Computers

- Works on mechanical motion or flow of electricity.
- Process continuous data.
- Limited Memory.
- Less Accurate.

This Photo by Unknown Author is licensed under CC BY-SA

Digital Computer

- Processing data in the form of binary number system.
- More Accurate.
- High Speed.
- Two types:
    - General Purpose Digital Computer.
    - Special Purpose Digital Computer.

This Photo by Unknown Author is licensed under CC BY-SA

Hybrid Computers

- Combination of Analog and Digital Computers.
- Input data is analog form.
- For processing analog data is converted into digital form.

Classification Based on Size

- Digital Computer
  - Micro Computer
  - Mini Computer
  - Mainframe Computer
  - Super Computer

AMRITA VISHWA VIDYAPEETHAM | AHEAD Online

Micro Computer

- Smallest memory.
- Less power.
- Portable personal computer.
- Usually a single chip.
- Can be a home computer or personal computer.

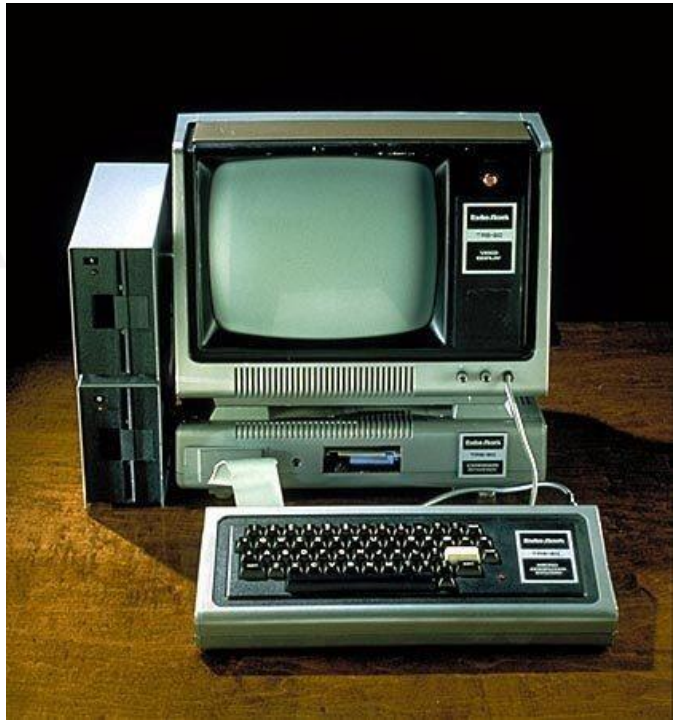

This Photo by Unknown Author is licensed under CC BY-SA

Mini Computer

- More powerful than micro computer.
- High Speed.
- Multiple processing units in single chip.
- Used in process control systems.

Mainframe Computer

- Very large machines.
- Process data at high speed.
- Linked to networks with other micro/mini computers.
- Used in large organization.

This Photo by Unknown Author is licensed under CC BY-NC

Super Computers

- Fastest and most powerful.
- Expensive.
- Doing complex tasks.
- Multiple processors.

This Photo by Unknown Author is licensed under CC BY-NC

Takeaways

- Analog Computer.
- Digital Computer.
- Micro Computer.
- Mini Computer.
- Mainframe Computer.
- Super Computer.

Objectives

- Basic operations performed by a Computer.
- Basic Building Blocks of a Computer.

Basic Operations

- Input Operations : The process of entering data and instructions in to the computer.
- Storing : Data and instruction can be stored for future processing.
- Processing : Operations that are performed on the data and to produce useful information.
- Outputting : The process of producing results to the outside world.
- Controlling: The process of controlling the above four operations.

Computer System

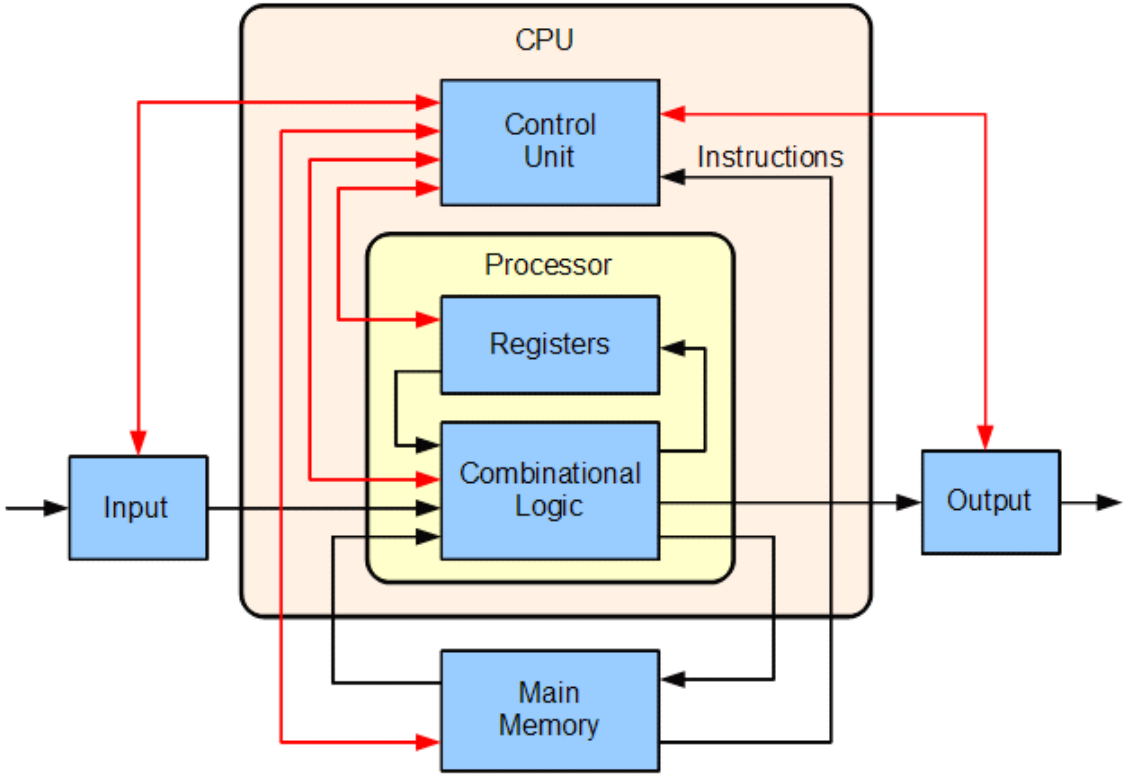

This Photo by Unknown Author is licensed under CC BY-SA

Computer System

- A typical computer system consists of :
  - CPU (central processing unit)
    - ALU (arithmetic-logic unit).
    - Control Logic.
    - Registers, etc.
  - Memory.
  - Input / Output interfaces.
- Interconnections between these units:
  - Address Bus.
  - Data Bus.
  - Control Bus.

Central Processing Unit

Controls the entire system.

- Arithmetic and Logic Unit(ALU).
- Control Unit.
- Registers.

ALU

- Execute instructions.
- Perform arithmetic and logic operations.

Central Processing Unit

Control Unit

- Controls the operations performed by the other units.
- Controls the transfer of data and instructions among other units.
- Decode the instructions.
- Communicates with input/output for transfer of data and results.

Registers

- Temporary Storage area.

Input and Output Unit

Input Unit

- Directs the data and instructions supplied by the user to the computer system for processing.

Eg. Keyboard

Output Unit

- Displays the results of the processing.

Eg. Monitor

Storage Unit

Function is to store the following.

- Data and instructions entered by the user.
- Intermediate results produced during the processing.
- Final results produced.

Two types

- Primary Storage.
- Secondary Storage.

Primary Storage

- Stores program in execution.
- Volatile.
- High Speed.
- Expensive.
- Small size.

Secondary Storage

- Holding stored programs and data.
- Less expensive compared to primary memory.
- Larger than primary memory.
- Slower than primary memory.
- Permanent storage of data.

Takeaways

- Operations of a computer.
- Basic Building Blocks.
- Central Processing Unit
- Input and Output Unit.
- Primary storage.
- Secondary storage.

Objectives

- Computer Memory.

AMRITA VISHWA VIDYAPEETHAM | AHEAD Online

Memory Unit

- Cache Memory.
- Primary Memory.
    - RAM
    - ROM
- Secondary Memory.

Cache Memory

- Place for frequently accessed data.
- Giving stored data to CPU at a faster rate.
- Located between RAM and CPU.
- No system bus for accessing cache memory.
- High Speed memory.
- Very expensive.

Primary Memory

- Main memory of the computer.
- Storing data and instructions.
- Limited storage capacity.
- 2 types
    - Random Access Memory(RAM)
    - Read Only Memory(ROM)

Random Access Memory

- Read/write memory.
- Temporary Storage/Volatile Memory.
- Two types
    - Static RAM
    - Dynamic RAM

Random Access Memory

SRAM

- Retains stored data as long as the power supply is ON.
- Each cell made up of 6 transistors.
- High speed than DRAM.

DRAM

- Frequent refreshing needed.
- Capacitor and transistor in a cell.

Read Only Memory

- Permanent memory.
- Non Volatile.
- Stored by the manufacturer.
- Read Only Memory.

4 variants

- Programmable ROM(PROM)
- Electrically PROM(EPROM)
- Electrically Erasable PROM
- Flash EPROM

Read Only Memory Variants

PROM:

- Information can be written only once.
- Manufactured as blank memory.
- PROM programmer or PROM burner for updates.

EPROM

- PROM that can be erased and programmed.
- Content can be retained till exposed to ultra violet light.
- PROM programmer or PROM burner for updates.

Read Only Memory Variants

EEPROM:

- Can be programmed and erased by exposing to special electric light.
- No replacement needed for programming.

Flash PROM

- Flash memory.
- Erasing at a faster rate.
- Entire device is erased, not the required word.

Secondary Memory

- Stores data and instructions permanently.
- Non volatile memory.
- High storage capacity.
- Cheaper.
- Slow compared to primary memory.

Takeaways

- Different types of storage in computer.

Objectives

- Memory Addressing.

Memory Cell

- **Cell:** A unit of main memory (typically 8 bits which is one **byte**)
  - **Most significant bit:** the bit at the left (high-order) end
  - **Least significant bit:** the bit at the right (low-order) end

Memory Cell

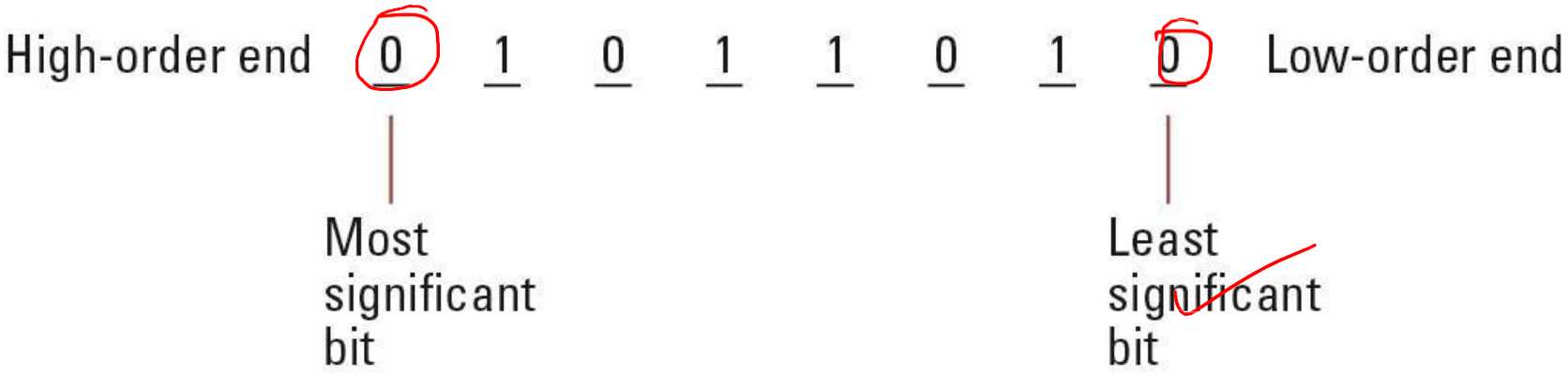
High-order end
0 1 0 1 1 0 1 0
Low-order end
Most significant bit
Least significant bit

Main Memory Address

- **Address:** A "name" that uniquely identifies one cell in the computer's main memory
- The names are actually numbers.
- These numbers are assigned consecutively starting at zero.
- Numbering the cells in this manner associates an order with the memory cells.

$K = 10$, $2^{10} = 1024$ loc.

Main Memory Address

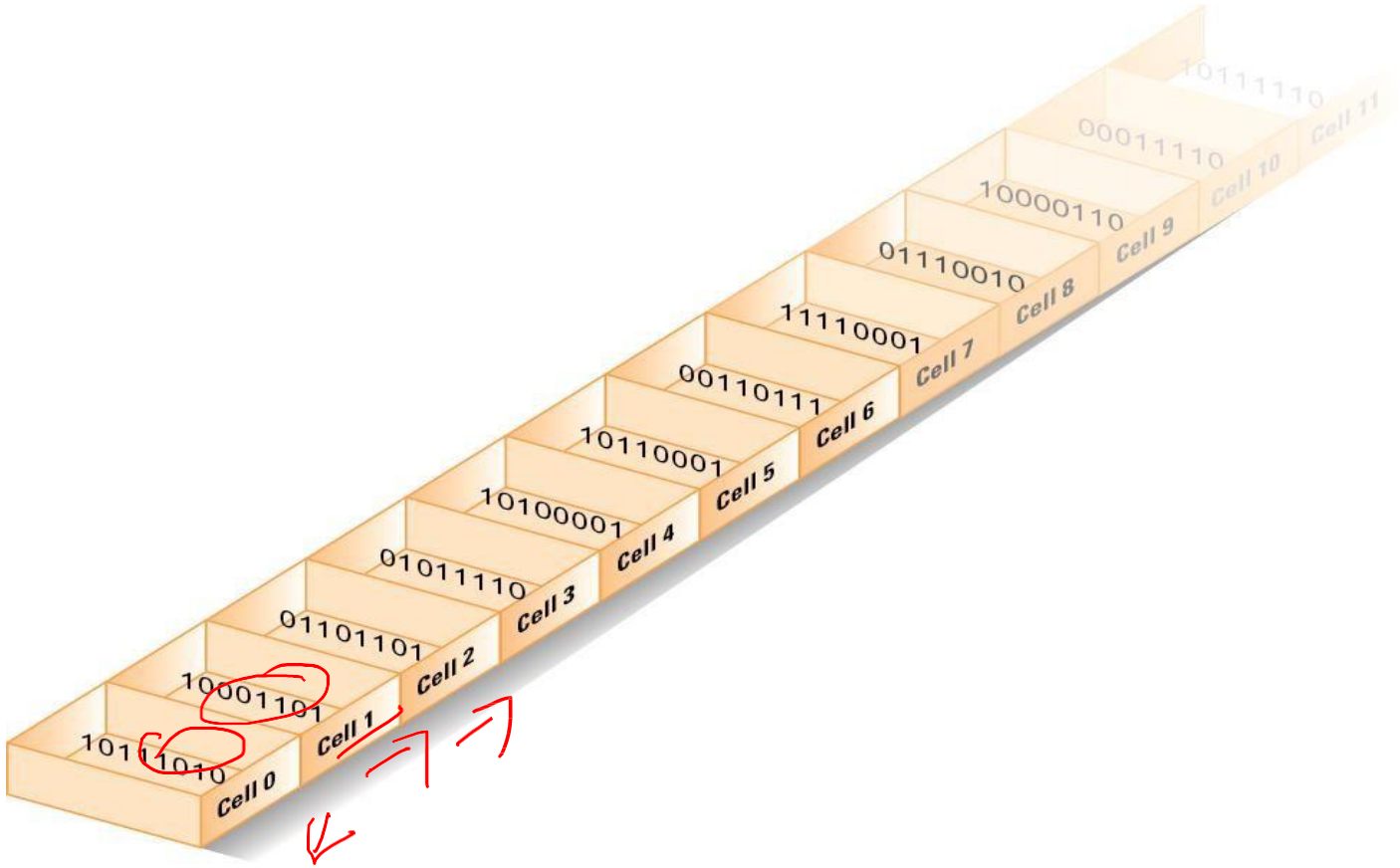

Main Memory Address

- Two types of byte ordering.
  - Big endian
  - Little endian

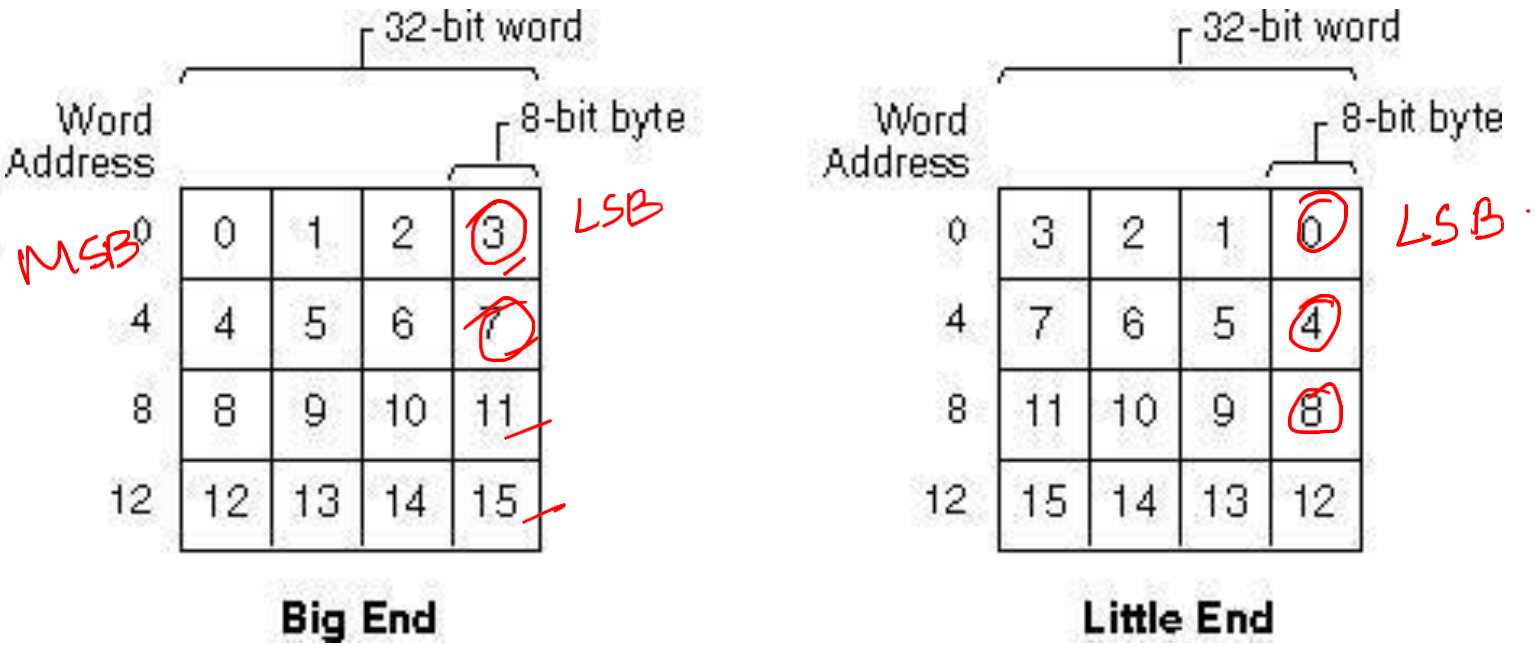

This Photo by Unknown Author is licensed under CC BY-SA

Takeaways

- A cell in primary memory.
- Address of a memory location.
- Byte ordering.

References

1 Fundamentals Computers, V Rajaraman, Neeharika Adabala, Phi Learning Pvt. Ltd

2 J. Glenn Brookshear,"Computer Science: An Overview", Addision-Wesley, Twelfth Edition, 2014

3 Computer Fundamentals, Anita Goel, Pearson