`

AMRITA VISHWA VIDYAPEETHAM

AHEAD Online

# Introduction to RDBMS & SQL

# View of Data

- One main purpose of a DBMS:
  - Provide users with abstract view of data
    - Hiding details of how data are stored and maintained
    - Hiding the complexity from the naïve users

Consider a C program:

```
#include<stdio.h>
int main() {
int a;
printf("Enter a number");
scanf("%d",&a);
printf("The entered number is %d", a);
return 0;
}
```

- The view for the users is the executed printf and scanf options.
- The program has a logic behind this with a set of statements.
- The physical aspect of this program is with regard to its storage space requirements.

# Data Models

- Data model:
  - A collection of conceptual tools for describing data, data relationships, data semantics, and consistency constraints.
- The data models can be classified into four different categories:
  - Relational Model
  - Entity-Relationship Model
  - Semi-structured Data Model
  - Object-Based Data Model

# Relational Model

- In the relational model, data are represented in the form of tables.
- Each table has multiple columns, and each column has a unique name.
- Each row of the table represents one piece of information.

A sample relational database

| *ID* | *name* | *dept_name* | *salary* |
|---|---|---|---|
| 22222 | Einstein | Physics | 95000 |
| 12121 | Wu | Finance | 90000 |
| 32343 | El Said | History | 60000 |
| 45565 | Katz | Comp. Sci. | 75000 |
| 98345 | Kim | Elec. Eng. | 80000 |
| 76766 | Crick | Biology | 72000 |
| 10101 | Srinivasan | Comp. Sci. | 65000 |
| 58583 | Califieri | History | 62000 |
| 83821 | Brandt | Comp. Sci. | 92000 |
| 15151 | Mozart | Music | 40000 |
| 33456 | Gold | Physics | 87000 |
| 76543 | Singh | Finance | 80000 |

(a) The *instructor* table

| *dept_name* | *building* | *budget* |
|---|---|---|
| Comp. Sci. | Taylor | 100000 |
| Biology | Watson | 90000 |
| Elec. Eng. | Taylor | 85000 |
| Music | Packard | 80000 |
| Finance | Painter | 120000 |
| History | Painter | 50000 |
| Physics | Watson | 70000 |

(b) The *department* table

# Entity-Relationship Model

- Diagrammatic representation.
- Collection of objects called Entities.
- Relationship between the entities.
- Commonly used in database design.
- Example:
  - Entity - instructor and Student
  - Relationship - advisor

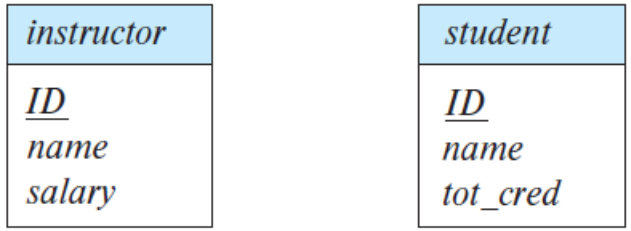


E-R diagram showing entity sets *instructor* and *student*.

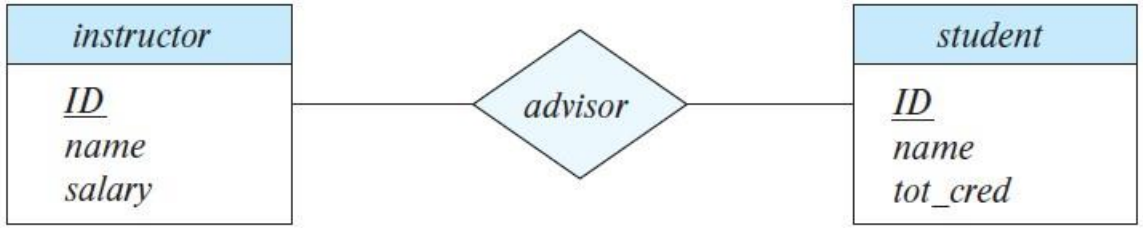


E-R diagram showing relationship set *advisor*.

# Three level Data Abstraction

- ANSI/SPARC Architecture
- The three levels are:
  - Physical level
  - Logical level
  - View level

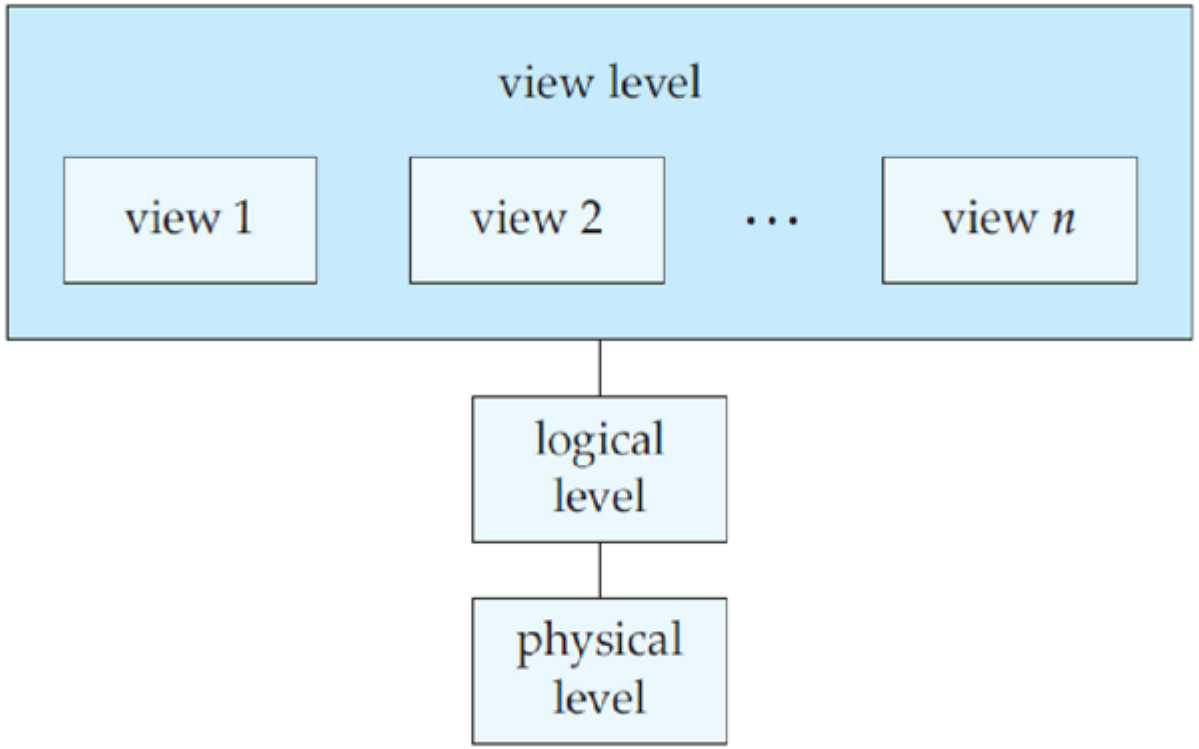

# Three Levels of Data Abstraction

- Physical Level
  - The lowest level of abstraction describes *how* the data are actually stored.
  - The physical level describes complex low-level data structures in detail.
- Logical Level
  - Describes *what* data are stored in the database, and what relationships exist among those data.
  - Therefore, the entire database in terms of a small number of relatively simple structures.
- View Level
  - The highest level of abstraction describes only part of the entire database.
  - Simplifies the interaction between user and the system.

# Instances And Schema

- The collection of information stored in the database at a particular moment is called an instance of the database.
- The overall design of the database is called the database schema.
- Based on the levels of abstraction:
  - Physical Schema – Database design at the physical level
  - Logical schema – Database design at the logical level
  - Subschemas – Different views of the database

# Example of schemas

Department (dept_name, building, budget)

*Student* (*ID*, *name*, *dept name*, *tot cred*)

Instructor (id, name, dept_name, salary)

*Advise* (*s id*, *i id*)

Course (Course_id, title, dept_name, credits)

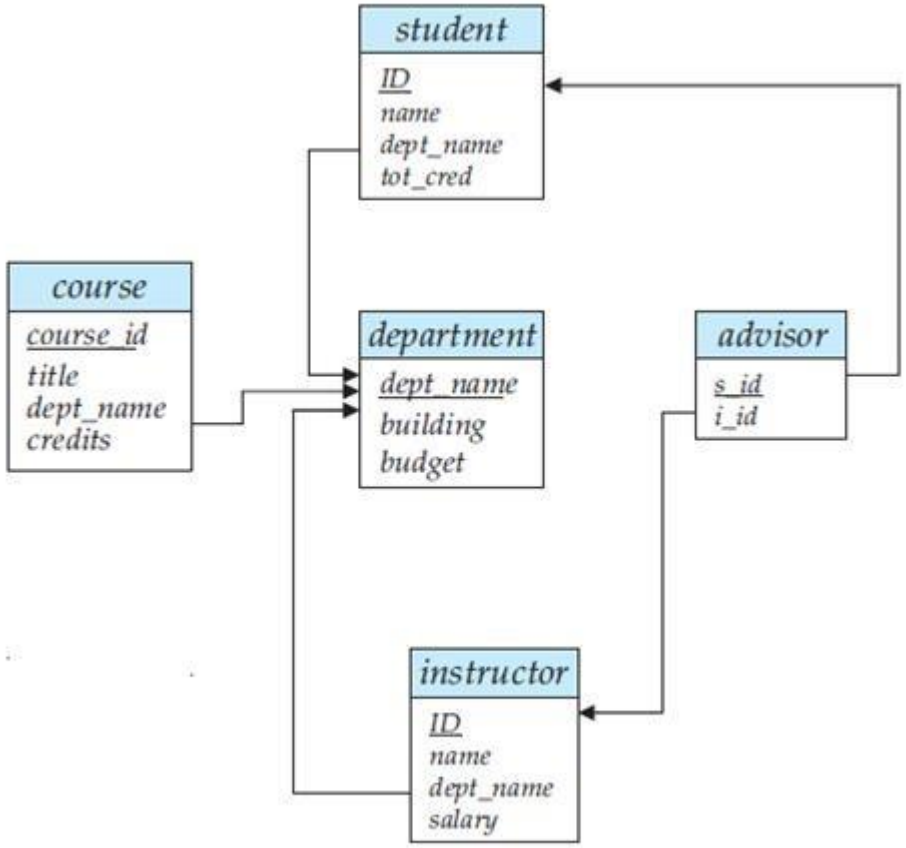

# Example of Instance

- Information stored in the database at a particular moment
- E.g. Set of instructor's information at a particular time *t*
- Insertions, Updates, Deletions to this data later, *t+1*
  - new instance

| *ID* | *name* | *salary* | *dept_name* | *building* | *budget* |
|---|---|---|---|---|---|
| 22222 | Einstein | 95000 | Physics | Watson | 70000 |
| 12121 | Wu | 90000 | Finance | Painter | 120000 |
| 32343 | El Said | 60000 | History | Painter | 50000 |
| 45565 | Katz | 75000 | Comp. Sci. | Taylor | 100000 |
| 98345 | Kim | 80000 | Elec. Eng. | Taylor | 85000 |
| 76766 | Crick | 72000 | Biology | Watson | 90000 |
| 10101 | Srinivasan | 65000 | Comp. Sci. | Taylor | 100000 |
| 58583 | Califieri | 62000 | History | Painter | 50000 |
| 83821 | Brandt | 92000 | Comp. Sci. | Taylor | 100000 |
| 15151 | Mozart | 40000 | Music | Packard | 80000 |
| 33456 | Gold | 87000 | Physics | Watson | 70000 |
| 76543 | Singh | 80000 | Finance | Painter | 120000 |

# Database Constraints

- Constraints are certain rules defined to limit the type of data inserted into the table.
- It ensures the reliability and accuracy of data in the database.
- It can be applied either at the column level or at the table level.
- Defined either during the table creation or later with some database commands.

# Most Commonly used Constraints

- Unique Constraint
- Not null Constraint
- Default Constraint
- Check Constraint

# Unique Constraint

- It's a column level constraint.
- Ensures that all values in a column are different.
- It's different than *primary key*.

# Not Null Constraint

- It's a column level constraint.
- Ensures that a column cannot have a NULL value.

AMRITA VISHWA VIDYAPEETHAM | AHEAD Online

# Default Constraint

- It's a column level constraint.
- Provides a default value for a column where no value specified during insertion of record.

# Check Constraint

- It's a column level constraint.
- Ensures that all the values in a column satisfy certain conditions.

# Database Keys & Constraints

**You can define this column with Check Constraint**

**Primary Key**

**Unique Key**

**Table: Students**

| Roll No | Name | Address | Date of Birth | Registration No. |
|---|---|---|---|---|
| BCA101 | Alan | Mumbai | 20-10-1989 | 6087452099 |
| BCA102 | Dev | Chennai | 05-02-1990 | 9789112902 |
| BCA103 | Ziva | Kolkata | 27-05-1989 | 8340008479 |

**You can define this column with Not NULL Constraint**

**You can define this column with Default Constraint**

**Foreign Key**

**Table: Marks**

| Roll No | Semester | Subject | Marks | Faculty |
|---|---|---|---|---|
| BCA102 | II | Maths | 89 | Helen |
| BCA103 | I | English | 94 | Yami |
| BCA101 | IV | C/C++ | 90 | Ann |
| BCA103 | II | Maths | 91 | Helen |
| BCA101 | III | Computer | 95 | John |

# Need of Database Keys

- In today's world, the data is rapidly increasing, GB to TB of data generating per day.
- Challenge: Instantly store and retrieve the large set of data in real-time.
- Database Keys: Ensures each record in a table is precisely identified.

# Database Keys

- Keys are fields in a database table which participate in below activities in RDBMS systems:
  - Establish relationships between multiple tables in the database.
  - To maintain uniqueness in a table.
  - To keep consistent and valid data in database.
  - Might help in fast data retrieval by facilitating indexes on column(s).

*"A Key is either a single column (or an attribute) or a group of columns that can uniquely identify rows (or tuples) in a table."*

# Types of Keys

- Candidate Key
- Primary Key
- Unique Key
- Super Key
- Foreign Key

# Candidate Key

- The minimal set of fields which can uniquely identify each record in a table.
- It is an attribute or a set of attributes that can act as a Primary Key for a table to uniquely identify each record in that table.
- There can be more than one candidate key.

**Candidate Keys**

**Table: Employee**

| Employee Table | | | | |
|---|---|---|---|---|
| **Employee_ID** | Employee_Name | Address | **License_Number** | **Passport_Number** |
| Emp101 | John | Mumbai | MI490587 | WBH874520995 |
| Emp102 | Riya | New Delhi | DL123456 | SQV789112902 |
| Emp103 | Bob | Chennai | CH231458 | EHN340008479 |

# Criteria for a Candidate Key

- It must contain unique values.
- It cannot contain null values.
- It comprises a minimum number of fields necessary to define uniqueness.
- Its values must uniquely and exclusively identify each record in the table.
- Its value must exclusively identify the value of each field within a given record.
- Its value can be modified only in rare or extreme cases.

# Primary Key

- A primary key field identifies the table throughout the database structure and helps establish relationships with other tables.
- It's a candidate key which is most appropriate to become main key of any table.
- A primary key value uniquely identifies a given record within a table and represents that record throughout the entire database. It also helps to guard against duplicate records.

**Primary Key**

**Table: Employee**

| Employee Table | | | | |
|---|---|---|---|---|
| **Employee_ID** | Employee_Name | Address | License_Number | Passport_Number |
| Emp101 | John | Mumbai | MI490587 | WBH874520995 |
| Emp102 | Riya | New Delhi | DL123456 | SQV789112902 |
| Emp103 | Bob | Chennai | CH231458 | EHN340008479 |

# Criteria for a Primary Key

- It must contain unique values.
- It cannot contain null values.
- It comprises a minimum number of fields necessary to define uniqueness.
- Its values must uniquely and exclusively identify each record in the table.
- Its value must exclusively identify the value of each field within a given record.
- Its value can be modified only in rare or extreme cases.

# Unique Key

- The set of one or more attribute that can be used to uniquely identify the records in table.
- Unique key is similar to primary key **but** unique key field can contain a "**Null**" value but primary key doesn't allow "**Null**" value.

**Unique Keys**

**Table: Employee**

| Employee Table | | | | |
|---|---|---|---|---|
| **Employee_ID** | Employee_Name | Address | **License_Number** | **Passport_Number** |
| Emp101 | John | Mumbai | MI490587 | WBH874520995 |
| Emp102 | Riya | New Delhi | DL123456 | SQV789112902 |
| Emp103 | Bob | Chennai | CH231458 | EHN340008479 |

# Super Key

- A set of one or more than one keys that can be used to uniquely identify the record in table.
- It is a set of one or more attributes whose combined value uniquely identifies the entity in the entity set.
- It is simply a non-minimal Candidate Key, that is to say one with additional columns not strictly required to ensure uniqueness of the row.

# Super Key

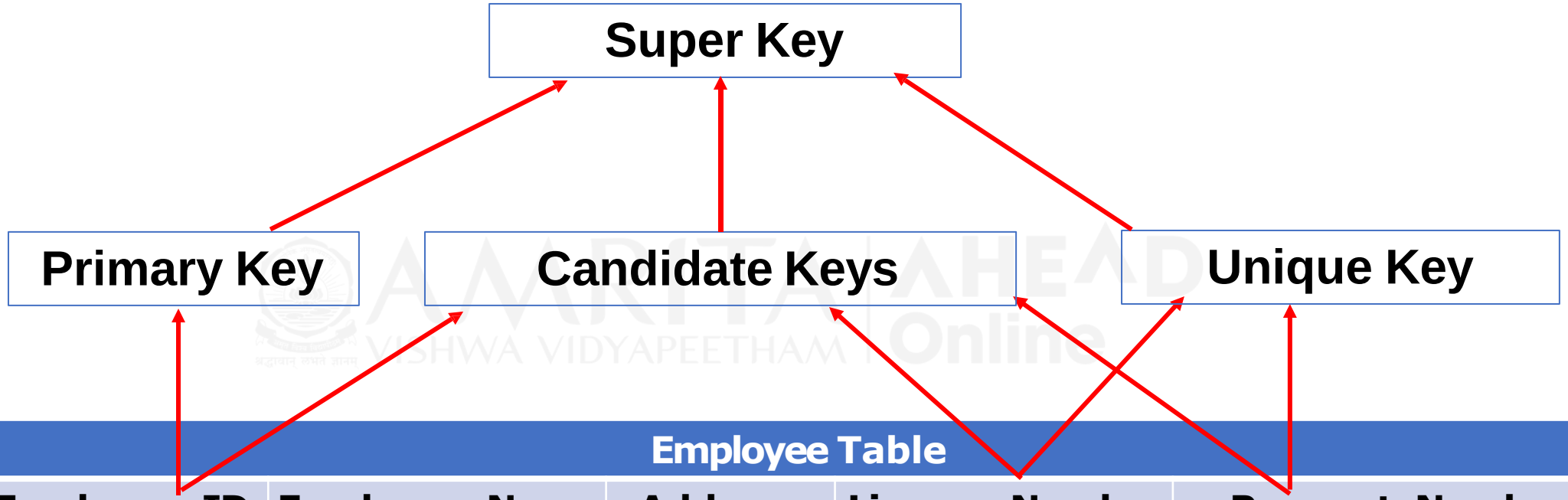


| Employee Table | | | | |
|---|---|---|---|---|
| **Employee_ID** | **Employee_Name** | **Address** | **License_Number** | **Passport_Number** |
| Emp101 | John | Mumbai | MI490587 | WBH874520995 |
| Emp102 | Riya | New Delhi | DL123456 | SQV789112902 |
| Emp103 | Bob | Chennai | CH231458 | EHN340008479 |

# Foreign Key

- It is used to generate the relationship between the tables.
- It is a field in database table that is Primary key in another table.
- It can accept null and duplicate value.

**Primary Key**

**Foreign Key**

**Employee Table**

| **Employee_ID** | Employee_Name | Address | License_Number | Passport_Number |
|---|---|---|---|---|
| Emp101 | John | Mumbai | MI490587 | WBH874520995 |
| Emp102 | Riya | New Delhi | DL123456 | SQV789112902 |
| Emp103 | Bob | Chennai | CH231458 | EHN340008479 |

**Salary Table**

| **Employee_ID** | Month_Year | Amount |
|---|---|---|
| Emp102 | Aug-2020 | 45000 |
| Emp103 | Aug-2020 | 50000 |
| Emp101 | Aug-2020 | 38000 |
| Emp103 | Sept-2020 | 50000 |
| Emp101 | Sept-2020 | 38000 |
| Emp102 | Sept-2020 | 45000 |

# SQL

- SQL - Structured Query Language : A relational database language.
- It is a standard programming language designed for Storing, Retrieving and Manipulating the data that exist inside a RDBMS.
- It is a medium used to communicate to the DBMS.
- SQL commands consist of English like statements which are used to query, insert, update and delete data.
- It is also referred to as "*non-procedural database language*".

# Features of SQL

- SQL is a language used to interact with the database.
- SQL is a data access language.
- SQL is based on relational tuple calculus.
- SQL is a standard Relational Database Management Language.
- The first commercial DBMS that supported SQL was Oracle in 1979.
- SQL is a "nonprocedural" or "declarative" language.

# The SQL Environment

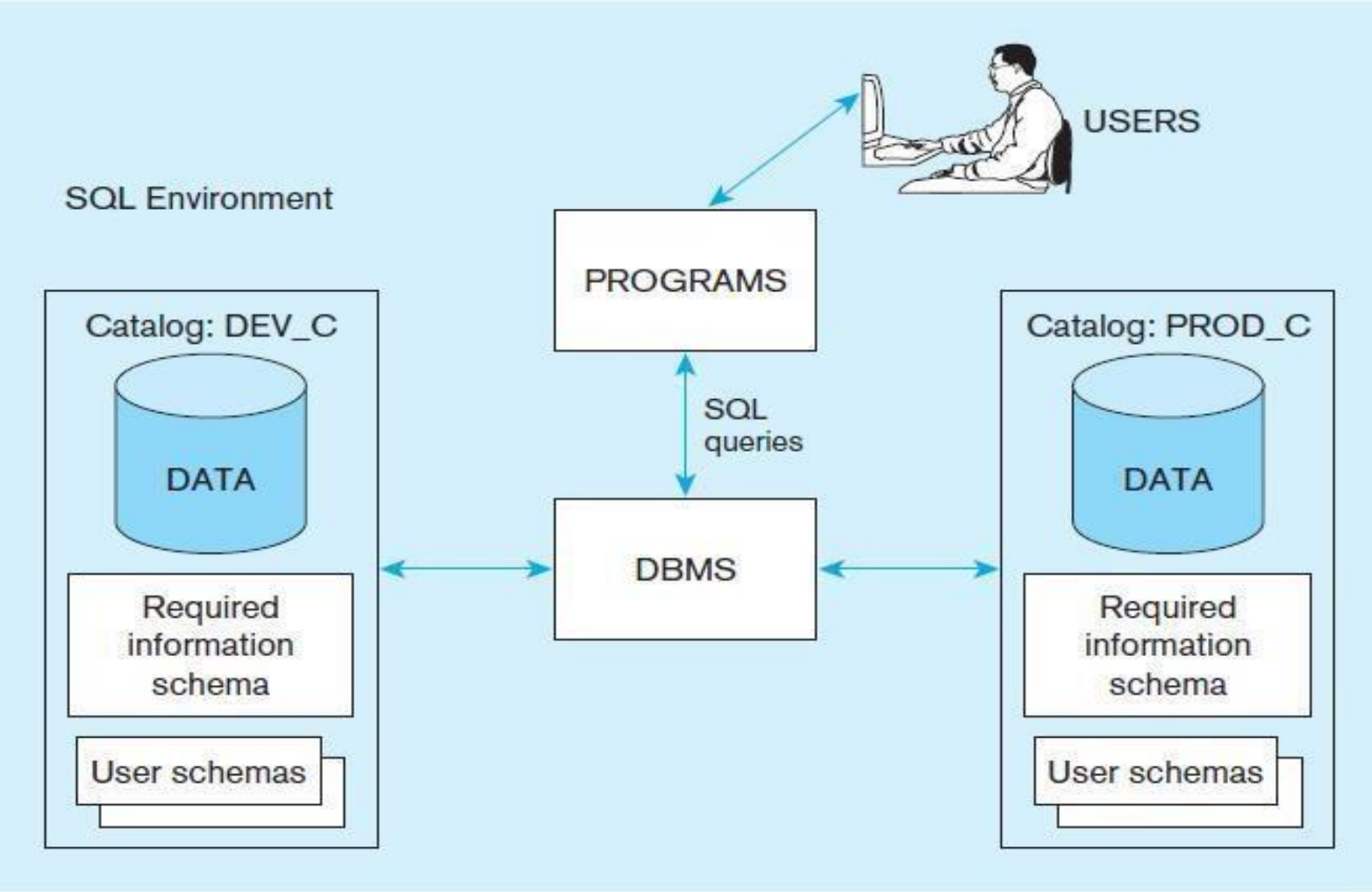

# SQL Datatypes

| | Data Type | Description |
|---|---|---|
| String | CHARACTER (CHAR) | Stores string values containing any characters in a character set. CHAR is defined to be a fixed length. |
| | CHARACTER VARYING (VARCHAR or VARCHAR2) | Stores string values containing any characters in a character set but of definable variable length. |
| | BINARY LARGE OBJECT (BLOB) | Stores binary string values in hexadecimal format. BLOB is defined to be a variable length. (Oracle also has CLOB and NCLOB, as well as BFILE for storing unstructured data outside the database.) |
| Number | NUMERIC | Stores exact numbers with a defined precision and scale. |
| | INTEGER (INT) | Stores exact numbers with a predefined precision and scale of zero. |
| Temporal | TIMESTAMP<br>TIMESTAMP WITH LOCAL TIME ZONE | Stores a moment an event occurs, using a definable fraction-of-a-second precision.Value adjusted to the user's session time zone (available in Oracle and MySQL) |
| Boolean | BOOLEAN | Stores truth values: TRUE, FALSE, or UNKNOWN. |

# What can SQL do ?

- Execute queries against a database.
- Retrieve data from a database.
- Insert, Update, Delete records in a database.
- Create new databases.
- Create new tables, stored procedures, views in a database.
- Set permissions on tables, procedures, and views.

# Types of SQL Commands

- DDL - Data Definition Language
- DML – Data Manipulation Language
- DCL – Data Control Language
- TCL - Transaction Control Language

# DDL - Data Definition Language

- DDL commands can be used to define the database schema.
- DDL commands are :
  - CREATE – Create an object. i.e. create a database, table, triggers, index, functions, stored procedures etc.
  - DROP - To delete objects. Eg: delete tables, delete a database, etc.
  - ALTER - Used to alter the existing database or its object structures.
  - TRUNCATE - Removes records from tables.
  - RENAME - Renaming the database objects.

# DML - Data Manipulation Language

- DML commands are used for performing queries on the data within schema objects.
- DML commands are :
  - SELECT –Select records or data from a table.
  - INSERT INTO –Insert data into a database table.
  - UPDATE –Update existing records within a table.
  - DELETE –Delete unwanted records from a table.

# DCL - Data Control Language

- DCL commands will control the Data access permission.
- DCL commands are :
  - GRANT – It permits users to access the database.
  - REVOKE – It withdraws the permission given by GRANT to access the database.

# TCL - Transaction Control Language

- TCL commands deals with the transaction within the database.
- TCL commands are :
  - COMMIT – Commit the running transaction.
  - ROLLBACK –Rollback the current transaction.
  - SAVEPOINT –Set a save point so that, next time it will start from here.
  - SET TRANSACTION –Specify the characteristics of the transactions.

# Summary

- In this session, we discussed about an overview of Structured query language (SQL).
- Evolution and benefits of SQL.
- A simplified schematic of a typical SQL Environment.
- Datatypes in SQL.

# Reference & Image Courtesy


- Sumathi, Sai, and S. Esakkirajan. *Fundamentals of relational database management systems*. Vol. 47. Springer, 2007.
- Modern Database Management, 10th Edition By Jeffrey A. Hoffer, 2011.